HAPP CONTROLS

AMUSEMENT 2004/2005

$10.00

GO TO INDEX

NEW HOME ENTERTAINMENT PRODUCTS

happcontrols.com

HAPP CONTROLS

Manufacturing Facility

Distribution Facility

HAPP CONTROLS CORPORATE HEADQUARTERS

106 Garlisch Drive • Elk Grove, IL 60007
TEL: 847-593-6130 • FAX: 847-593-6137
Toll Free Phone: 888-BUY-HAPP
Toll Free Fax: 800-593-HAPP
e-mail: info@happcontrols.com

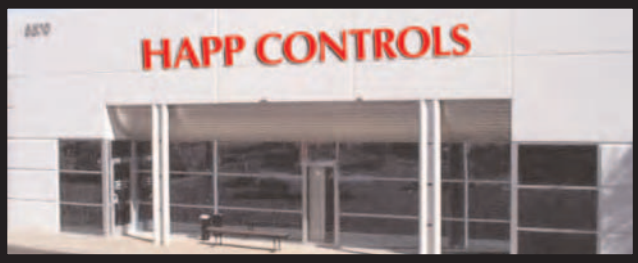

LAS VEGAS BRANCH

6870 S. Paradise Road • Las Vegas, NV 89119
TEL: 702-891-9116 • FAX: 702-891-9117
Toll Free Phone: 800-831-0444
Toll Free Fax: 877-870-2259

SOUTH CAROLINA BRANCH

1200 Woodruff Road A-2 • Greenville, SC 29607
TEL: 864-288-6255 • FAX: 864-288-6190
Toll Free Phone: 888-USE-HAPP
Toll Free Fax: 877-FAX-HAPP

WHOLESALE ELECTRONICS
Division of Happ Controls

77 McCullough Drive, Suite 10 • New Castle, DE 19720
TEL: 302-328-4464 • FAX: 302-328-4547
Toll Free Phone: 800-222-2899

HAPP CONTROLS EUROPE Ltd

Unit 7, Hornet Close • Pysons Industrial Estate
Broadstairs, Kent CT10 2YD • UNITED KINGDOM
TEL: 44-1843-871-100 • FAX: 44-1843-871-122
e-mail: europe@happcontrols.com

OUR MISSION

QUALITY

We test and retest the products we assemble and sell, to ensure the highest levels of quality. We constantly strive to improve the quality of our products and service.

SERVICE

In an effort to maintain the ultimate in customer satisfaction, we now bring you a new level of convenience with our web site. Through our web site you have access to our on-line catalogs, new products, monthly specials, and our brand new ehapp on-line ordering system. The ehapp shopping cart system allows you to easily build a secure on-line order with current pricing and availability, 24 hours a day/7days a week. Other on-line benefits of ehapp include viewing the status or history of orders, easy duplication of previous orders, and e-mail notification with tracking information upon shipment of ehapp orders.

We ship quickly and accurately from our five distribution centers. Our friendly sales staff will gladly help you in English or in Spanish. Customer satisfaction is our first priority.

VALUE

Competitive everyday prices, and special low prices for volume buyers, or export customers. We will not be undersold!

INNOVATION

Our engineering team is constantly developing new products that lead the industries we serve. Cost reduction and product improvements are our goals.

PATENTS, COPYRIGHTS, TRADEMARKS

Happ Controls products are protected by United States and Foreign Patents (Granted and Pending). Happ Controls maintains an aggressive policy against infringement of patents, copyrights, or trademarks.

Happ Controls reserves the right to improve our products without prior notice.

Happ Controls is dedicated to the proposition that our customers are our most valuable resource. If we ever fail to satisfy you in any way, please call me personally.

Thank you for your business.

Frank L. Happ, President

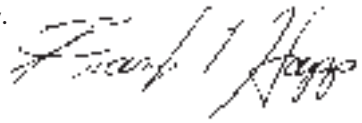

ORDERING INFORMATION

ORDER BY MAIL, PHONE, FAX OR ON-LINE

Use Happ Controls part numbers and descriptions as shown in this catalog.

Use your company name, your name, address, zip code, phone number and fax number (including area code). Use your Happ Controls customer number and your Purchase Order Number, if desired.

If you wish to obtain up-to-date information on current products or new product introductions, visit our interactive web site: **http://www.happcontrols.com**

TERMS

Our terms are C.O.D., Visa, Master Card, American Express or Net 30 days (with approved credit). See page 425 for credit application.

When sending money in advance of shipping, please include money for shipping charges and your state sales tax, applicable in AZ, CA, CO, DE, FL, GA, IL, IN, KS, KY, LA, MI, MN, MS, NJ, NM, NH, NV, NY, OK, PA, SC, TN, TX, VA, WA, WI

All prices are net F.O.B. our docks, unless otherwise specified.

MINIMUM ORDER

Minimum order is $25.00 plus shipping charge and your state sales tax, if applicable (see list at left). All prices are in U.S. dollars and subject to change without prior notice.

WIRE TRANSFER INFORMATION

Send wire transfer of funds to:
Harris Trust and Savings Bank
Chicago, IL 60603 U.S.A.
ABA Number 071000288

Credit to: Happ Controls, Inc.
Account Number: 280-676-8

1. Please include your company name and customer number for proper identification of sender, plus invoice number(s).
2. Please fax Happ Controls informing us of the date of your wire transfer, the amount of the transfer, and the invoices of orders you are paying. (Our Accounting Department fax number is 847-952-5931) Send it to the attention of **Accounts Receivable**.

RETURNS FOR CREDIT

Call, write, or fax Happ Controls for return authorization. Credit for returns will be granted subject to our inspection. A restocking charge will be applicable.
Call and receive an RMA number from our customer service department.

© 2004 HAPP CONTROLS This catalog may not be reproduced in whole or in part without written permission of Happ Controls

INDEX

QUICK INDEX

ACCESSORIES 364
BILL VALIDATORS 222
BILLIARDS 402
CLEANING & MAINTENANCE 98
COIN DOORS 250
COIN & CURRENCY SUPPLIES 203
CREDIT APPLICATION 425
DARTS & FOOSBALL 396
DRIVING CONTROLS 284
ELECTRICAL SUPPLIES 19
GAME PARTS 336
JOYSTICKS 305
JUKEBOX & MUSIC 372
LIGHTING 10
MATERIAL HANDLING 148
MONITORS & COMPONENTS 163
OPTICAL GUNS 325
ORDER FORM 423
PINBALL PARTS 383
POWER SUPPLIES 182
PUSHBUTTONS 189
REDEMPTION 360
SECURITY 114
TOOLS 54
TRACKBALLS 317
VIDEO SURVEILLANCE 136

10-In-1 Screwdriver Tool 65
3-In-1 Tap Tool 59
3M Connectors 34
3M Double Sided Tape 99
3M Dual Lock Fastener 36, 100
3M Electrical Tape 99
3M MicroTouch Touch Monitor 177
3M MicroTouch Touch Screens 178
3M Scotchgrip 10 Contact Adhesive . . . A18, 111
3M Scotchlok Connectors 34
3M Spray Adhesive A18 111, 406
4-In-1 Pocket Driver Set 64
4-Way Pocket Tool 65
8-Ball key Chain And Cue Scuffer A17 419
8-Line Harness 186

• A •

Abus Padlock 125
AC Sensor, Santronics 38
Acceptor, Roll-Down 263
Access Doors 263-264
Accessories 364-371
ACE Lock Cams 119
Acid Brush 110
Adhesive Remover 108
Adhesive, Super 102
Adhesives 102, 108, 111-112
Alarm System 132
Allen Hex Socket Driver Sets 61
Alligator Clip Set 94
All-Purpose Cleaner 101
All-Purpose Dolly 158
Alpine Racer Step Covers, Replacement 353
American Laser Games Gun Kit 328, 358
American Lock Company Hasps 126
American Lock Company Padlock 126
American Lock Company Puck Lock 125
American Sammy Pump Action Shotgun 331
American Sammy Scope Gun 330
American Sammy Shotgun Barrel Holster 335
AMP Connectors 33-34
AMP Extractor Tools 33
AMP Picabond Crimp Tool 33
Analog Joysticks 309-312
Anchor Plates 124
Anti-Slam Switch 387
Anti-Static Cleaner And Polisher 101
Anti-Static Cloth 53
Anti-Static Foam 53
Anti-Static Supplies 53
Anti-Static Tool Kit 53
Appliance Cord 28
Arachnid Dart Games, Parts For 398-399
Ardac Changer Upgrade Kit 238
Ardac DBA7 Bill Validator 244
Ardac Rebuilding Kit 247
Ardac Replacement Parts 249
Area 51 Security Board 352
Artic Thunder Handle Grip 293, 352
Artic Thunder Seat 293
Ashtray, Flip-Over A20 369, 397
Axial Capacitors 48
Azkoyen Hoppers 205

• B •

B&P Manufacturing Platform Trucks 158
Back Channel Assembly 221
Bad Air Sponge 113
Bag, Money 213
Bags, Static Shield 53
Ball Pein Hammers 63
Ball Pressure Gauge 360
Ball Sets, Billiard A2 407-408
Ball Shooter Assembly 385
Ball Shooter Springs 385
Ball Shooter Tips 384
Ballasts 12-13
Ballgate Spring, Pool Table 416
Ballstar Pool Ball Cleaner A19
Ballstar Pool Ball Cleaner And Polisher A3 406
Bally, Replacement Coils For 386
Bank Deposit Bags 213
Bar Stools A20
Barge Cement A18 111, 406
Basket, Collapsible 160
Basketball Nets 361
Basketballs 361
Bat, Plastic Reflective 336, 360
Batteries 38-39
Batteries, Lithium 38
Battery Charger 38
Beacon Light 365
Bearings For Trackballs 324
Belgian Aramith Balls A2 407-408
Belt Changers 204
Belts, Bill Validator Replacement 249
Belts, Lumbar Support 162
Belts, Web 157
Beverage Racks A19 369, 421
Bezels, Midway 344
Big Buck Hunter, Replacement Shotgun For . 339
Bill Changer Upgrade Kits 238
Bill To Bill Exchanger 204
Bill Validator Doors 267
Bill Validator Enclosure 267
Bill Validator Integration Kit, RS232 239
Bill Validator Interface Board, RS232 239
Bill Validator Labels 214-215, 245
Bill Validator Mounting Kits 245
Bill Validator Replacement Belts 249
Bill Validator Service Center 222
Bill Validator Tester 244
Bill Validator Vault 267
Bill Validators 222-249
Billiard Ball Set, Belgian Stone Ball . . . A2 408
Billiard Ball Set, Blacklite A6 408
Billiard Balls A2-A3 407-408
Billiard Barge Pool Table Transport Protector 415
Billiard Chalk A4-A5 417-418
Billiard Cloth A7-A9 402-405
Billiard Lights A6 411
Billiard Supplies 402-422
Bin Box 160-162
Bin System 162
Bit Holder 67
BladeSmith Utility Knife 67
BladeSmith Utility Knife Blades 67
Blank Door 263
Blanking Plate For Door Cutout 267,279, 363
Blanking Plate For Ticket Dispensers . . . 279, 362
Block Out Plate, Rowe Changer Coin Entry . . 236
Blue Shower G3 Cleaner / Degreaser 107
Blue Shower II 108
Bolt Cutters 34, 57-58
Bolts, Carriage 97
Bostitch Staple Remover 52
Bowler Cards 357, 369
Bowler Pucks 360
Bowling Ball 361
Bowling Pin Reset Lever 357
Bowling Pins For Shuffle Alley 356
Box, Bin 160-162
Box, Utility 160
Brake Lever 353
Brake Pedal 304
Brass Tags 124
Brawney Brute Hand Truck 155
Bridge Heads A15 419
Broom, Whisk 109
Brush Attachment Kit 108
Brushes A16 109-110, 409
Brute Hand Truck 155
Bulbs 10-11, 14-18
Bulbs, Flashlight 40
Bullshooter Throw Line Marker A26 398
Bumper Sleeves 384
Bumper Tube Slip-On Rail Cloth 404
Burnisher, Metal 69

Bussman Fuses 19-20
Butane Gas Refill. 110
Butt Connectors 35
Button Covers. 202
Button Housing. 201
Button Plugs 201
Button Plugs, VLT 196
Buzzy Bee Ball. 361

• C •

C.A.R.T. Fury Molded Seat 299-300
Cabinet Access Doors. 264
Cabinet Corner Protector 367
Cabinet Handle. 368
Cabinet Wheel Assembly 367
Cable Clamps 36
Cable Slitter / Stripper 25, 59
Cable Tie Kit 37
Cable Tie Marking Pen 37
Cable Tie Mounting Pads 37
Cable Ties 36-37
California Speed Molded Seat 296
Cam Stop 119
Camera Housings 138
Camera Lenses 138
Camera Mounts 139
Camera System. 142
Cameras, Surveillance 136-138
Cams, Lock 119
Can Holder A19 98, 368, 397, 421
Capacitor Analyzer, Sencore. 88
Capacitor Wizard 90
Capacitors 46-48
Carpet Stretcher 159
Cash Box Systems. 265
Cash Boxes 264-265
CashCode Bill Validator Mounting Kits 245
CashCode Bill Validators C3 240-243
CashCode NexGen $20 Upgrades 224
CashCode Plug-In Transformer. 243
CashCode Power Supply Adaptor 243
CashCode Validator Service Center 222
CashScan Bank Note Counter 212
CAT 5 Cable 24-25
CAT 5 Cable Stripper 58
CAT 5 Jack 27
CAT 5 Patch Cords 25
CAT 5E Cable 25
CAT 5E Cable Stripper 25
CAT 5E Coupler 25
Caution Safety Tape 99
CD-Pro II Player For NSM Jukeboxes 378
CD-ROM Drive For Merit MegaTouch 341
Centipede Game A30
Ceronix Monitors. 167-168
Chain. 124
Chalk, Billiard. 417-418
Championship Pool Cloth . . A8 C4 402-404
Championship Pool Cloth Colors. A8
Changers, Bill 203
Chassis Boards, Monitor. 179
Chassis, Midway 345
Cherry Switches C5 41-44, 338, 387-389
Cigarette Warning Label. 215
Circline Fluorescent Lamps. 11
Circuit Analyzer, Electrical 41
Circuit Analyzer, Sencore 91
Citizen Printer 371
Clamp, Panel. 368
Clamp-On Lamp 38
Cleaning And Maintenance Supplies 98-113
Cleaning Cards 100
Cleaning Swabs 109
Closed End Connectors 35
Coffee Pot Brush. 109
Coffee Pot Cleaner 106
Coil Cleaner 105
Coil, Degaussing. 181
Coil, Width 179
Coils And Sleeves, Pinball. 386
Coin Acceptor Box, Side Mount 266
Coin And Currency Supplies 203-221
Coin Bag Enviro Seals. 212
Coin Bags 213
Coin Chute Bracket. 416
Coin Chutes. 413-414
Coin Controls Door Parts. 280-281
Coin Controls Front Plate Parts 293
Coin Controls Pinball Door Parts 282
Coin Controls Replacement Parts. 220
Coin Counters And Sorters 206-212
Coin Deposit Bags 213
Coin Dispensers 204
Coin Door Labels 214
Coin Door, Mid-Width Validator. 256
Coin Door, Mini Over / Under 257
Coin Door, Over / Under 254
Coin Door, Over / Under Single Entry 255
Coin Door, Slim. 266
Coin Door, Stackerless Validator 252
Coin Door, Triple 261
Coin Door, Upstacker Validator. 250-251
Coin Doors. 250-283
Coin Doors, Multi-Player 259-260
Coin Doors, Single 263
Coin Entry System. 220
Coin Entry, Rowe Changer Block Out Plate . . 236
Coin Entry, Top 220-221
Coin Holder, Quarter A20 398, 416
Coin Hopper Fill Bags. 213
Coin Mechanisms Coin Timer Box 269
Coin Mechs 272-276
Coin Reject Button Labels 216
Coin Return Cup 221
Coin Stacker Tubes. 211
Coin Switches 42, 220
Coin Timer Box. 269
Coin Validator System, NRI 275-276
Coin Vending Timer 364
Coin Wrappers 211
Cold Shrink Tape 99
Collapsible Basket 160
Collection Report Book. 212
Commodity Trough Cleaner. 105
Compact Disc Cleaner 103
Compact Fluorescent Lamps 11
Compact Joystick 308
Competition Joystick 305
Competition Pushbutton 199
Compressed Air. 106-107
Computer Surge Protector 29
Condensor Fin Brush 110
Cone Chalk 417
Cone Chalk Holder A5 417
Connectors 31-35
Connectors, 3M 34
Connectors, AMP 33
Connectors, Butt. 35
Connectors, Closed End. 35
Connectors, Edge. 35
Connectors, Fiber Optic 26
Connectors, JAE. 35
Connectors, Simplex. 26
Connectors, Wire 23
Contact Cleaner 104, 107
Continuity Tester 41
Control Panel For Golden Tee Fore 338
Control Panel Overlay. 368
Convertible Coin / Currency Door System . . . 253
Cooling Fans. 30, 341, 367
Cooper Bussman Fuses 19-20
Corner Protector, Cabinet 367
Cotter Pins 96
Countertop Pedestal. 341
Counting Meter, Kessler Ellis 416
Counting Meters 217-219
Cover, Plastic 159
Covers, Machine 159
Covers, Pool Table A19 410
Covers, Pushbutton. 202
CPU Cooling Fans. 30
CPUs, Midway. 345
Crain Power Carpet Stretcher. 159
Crane Coils 386
Crane Game Parts. 369
Credit Accumulator / Timer 364
Credit Application, Happ Controls. 425
Crescent Tools. 55-57, 60, 65
Crimp And Cleave Connectors. 26
Crimping Tools 34, 57-58
Cruis'n Exotica Molded Seat 297-298
Cruis'n Molded Seat 298
Cruis'n World Molded Seat 296
CSI/Speco Power Supply 67
Cue Balls. A2-A3 407-408
Cue Chalk Holder A5 418
Cue Conditioner 418
Cue Scuffer 419
Cue Stick Carrying Case A15 422
Cue Stick Racks A10 421
Cue Sticks. A11-A15 422
Cue Tip Cement 111, 412
Cue Tip Repair Clamps A17 412
Cue Tip Repair Kit A17 412
Cue Tips A17 412
Cue Top Sander A17 412
Cup Holder A19 397, 421
Currency Bands. 211
Currency Counters 212
Currency Wallets. 213
Cushion Facing 418
Cushion Rubber, Pool Table. 415
Cusion Rail Set, Pool Table. 415

• D •

Dart Boards, Electronic. 396
Dart Collars. 397
Dart Flights 397
Dart Game Throw Line Markers A26 398
Dart Pro Dartboards A24
Dart Tip Extractor A26 397
Darts A25-A26 397
Darts And Foosball . A21-A22 A23-A26 396-401
Data East Pinball, Replacement Parts For386, 391
Daytona Replacement Shifter. 292
Daytona Style Pedal 304
Decals, Midway 345-348
Defender Game A31
Defender II Game. A31
Degaussing Coil 181
Degreaser 112
Deltronic Labs Ticket Dispenser 277, 362
Desoldering Braid. 73
Desoldering Pumps 71
Desoldering Stations. 73, 77

Devcon 5-Minute Epoxy 112
Digital Video Management Systems 143-147
Diodes. 48
DIP Extractor. 52
Dispenser Motor, Vending 364
Displays, Dot Matrix 390
Dollar Bill Cleaning Cards. 100
Dolphin Cue Stick 422
Dome Cameras. 138
Door Blanking Plate 267
Door Cam 118
Door, Blank 263
Door, Mid-Width Access. 263
Doors For Bill Validators 267
Doors, Coin 250-283
Doors, Pinball 258
Doors, Ticket Dispenser. 278-279
Dot Matrix Display 390
DPI Speakers. 372
Drill Bit Set. 63-64
Drill Bits. 64
Driver And Bit Set 66
Driver Kit, Cordless 69
Driving Controls. 284-304
Drop Target 385
Duct Tape 99
Dufferin Maple Cue Sticka A14
Dunn Tonner Truck 157
Duo Cam Locks. 116
Duo Lock Cams. 119
Dura Shield Cleaner And Polish 101
Duracam II Cam Locks 117
Duracell Procell Batteries 38
Dura-Driver Tool Kit 60
Dutro Hand Trucks. 155-156
Dynamo Foosball, Parts For A21 400
Dynamo Hockey, Replacement Parts . . A22 401
Dynamo Pool Table, Replacement Hasp 414
Dynamo Pool Table, Replacement Parts 419

• E •

E.S.D. Coin Chutes 413
Eagle Plugs And Connectors 22
Easy leveler 415
Easy-Lift Pool Table Mover 158, 415
Eclectic E-6000 Adhesive Sealant. 111
Edge Connectors 35, 186
Edward Vacuum Cleaner 113
Electrical Plugs And Connectors 21-22
Electrical Supplies 19-53
Electrical Tape 99
Electronic Components 45-52
Electronic Shears. 55
Electronic Snips. 58
Elk Master Cue Tips A16 412
Elo Touch Screens 178
Emit Meters. 219
Entropy 2000 Ticket Dispenser. 277, 362
Entropy Triple Door 261
Enviro-Duster Compressed Air 106
ENVI-RO-TECH Freezer 108
EPROM Remover 52
EPROM Upgrades, Bill Validator 223-227
EPROMs 52
E-Rings 97
Escort Hand Trucks 155
ESD Fiels Service Kit 53
Eveready Flashlights 39
Extension Cable, PS/2. 324
Extension Cable, USB 324
Extension Cords 28
Extraction Tool, I.C. 52, 58
Extractor Tool, DIP 58
Extractor Tool, PLCC 52
Extractor Tools, AMP 33
Extractor Tools, Molex 31, 69
Extractor, Dart Tip. 397
Extractor, DIP 52
Eyebolt 131
E-Z Vend Wax And Oil Remover. 106
EZ-RJ45 Connectors 27
EZ-RJ45 Crimp Tool 27
EZ-RJ45 Termination Kit 27

• F •

Fanny Pack 214
Fans, Cooling 30, 341
Fasteners 95-97
Featherstrip Set. 418
Federal Padlock 125
Felt Cleaner, Wildcat. A19 104, 410
Ferrules A17 412
Fiber Optic Cable 24, 26
Fiber Optic Cleaning Kit. 26
Fiber Optic Connectors 26
Fiber Optic System Test Kits. 26
Fiber Optic Termination Kit 26
Fiber Optic Tool Kit 26
Files, Flexstone 69
Fire Vulcan LED Lantern 41
Flag Terminals. 34
Flashlight Bulbs. 40
Flashlight Sheath. 68
Flashlights 39-41
Flex-Ace Parts 118
Flex-O-Hasp 126
Flexstone Files 69
Flight Yoke 287
Flip-Over Ashtray A20 369, 397
Flipper Rebuild Kits. 385
Flipper Rubbers 384
Fliptronic Flipper Rebuild Kits 385
Flood Lights 18
Fluke Multimeters 93
Fluorescent Ballasts 12-13
Fluorescent Lamps. 10-11
Fluorescent Light Fixture 11
Fluorescent Safety Sleeves 11
Fluorescent Sockets 14
Fluorescent Starters 13
Fluorescent Work Lamp, Magnifying 63
Flux Remover 109
Flyback Tester, Sencore 89
Flyback Transformers 180
Foam Tape 99
Foosballs A22 400
Football. 361
Fork Terminals 35
Fort Locks 117
Four-In-One Screwdriver. 65
Front Plate Assemblies 268-269, 283
Fuse Assortment Kits 21
Fuse Blocks 21
Fuse Puller 20
Fuse Rack 20
Fuseholder, Panel Mount 21
Fuseholder, PC Mount 21
Fuses 19-21

• G •

Galaga Replacement Joystick. 307
Game Parts 336-359
Game Stools A20 364
Gas Pedal 304
Gator Grip Socket Kit 54
GEM Lock Cams 119
Gematic Lock Cams 119
Gematic Type Locks 117
Gemini CP-100 Playfield Cleaner 105, 395
Gemini Hand Trucks 148-149
Genie-One Pattern Generator 181
Glass Cleaner 101
Glass Filament Tape 99
Glass, Pinball Playfield 390
Glasses, Safety 67
Glove Pouches 68
Glue Gun, Weller 69
Glue Sticks 69
Golden Dollar Conversion Kit. 274
Golden Tee Fore 2004 Game A29
Goo Gone. 111
Gottlieb, Replacement Coils For 386
Grand Pack-N-Roll Z-Cart 162
Graphite, Mr. Zip 110
Greenwald Coin Chutes 414
Grip Assemblies, Joystick 314
Gully Boots A17 418
Gun $aver Hose Clamp Kit 334
Gun Holster Protector Kit, Namco 334
Gun Holsters 334-335
Gun Lens, Namco 352

• H •

Hakko Soldering / Desoldering Equipment. 74-78
Hamilton Upgrade Kit. 238
Hammers. 63
Hand Cleaner 104
Hand Trucks And Equipment. 148-162
Handle Assembly For Addams Family 359
Handle Assembly For Shocker Chair 359
Handle Grip For Artic Thunder 293
Handle, Cabinet 368
Happ Controls 7-Pin Tumbler Locks 116
Happ Controls All-Purpose Cleaner 101
Happ Controls Aspen Elite LED Flashlight 40
Happ Controls Cleaning Cards. 100
Happ Controls Coil Cleaner 105
Happ Controls Coin Counters 206-208
Happ Controls Coin Mechs 272-273
Happ Controls Commodity Trough Cleaner. . 105
Happ Controls Credit Application 425
Happ Controls Enviro-Duster 106
Happ Controls E-Z Vend Wax & Oil Remover 106
Happ Controls Glass Cleaner 101
Happ Controls Guardian Door Hasps . . . 131-132
Happ Controls Line Card C15-C16
Happ Controls Lock Department 115
Happ Controls MaplePro Cue Stick C12
Happ Controls Meters 217
Happ Controls Monitor Repair Center. . C13 168
Happ Controls Order Form 423-424
Happ Controls Puck Lock 125
Happ Controls Quality Coat Paint 98
Happ Contols Sales Teams 426-430
Happ Controls Screwdriver. 64
Happ Controls Spray Adhesive . . . A18 111, 406
Happ Controls Stainless Steel Cleaner 105
Happ Controls Ultimech Coin Mechs . . . 272-273
Happ Controls Vandal Mark Remover 101
Happ Controls Vision Pro Monitors 163-166
Happ Controls Web Site. C1-C2 431-432
Hard Drives, Midway. 348
Harness, 8-Line 186
Hasp For Arachnid Galaxy 2 128
Hasp For Dynamo Hockey Tables. 127

Hasp For Dynamo Pool Tables 127, 414
Hasp For Golden Tee Golf 128
Hasp For Merit Games 126
Hasp For Silent Scope 129
Hasp For Standard Change-Makers Changers 129
Hasp For Valley / Dynamo Pool Table 127
Hasp For Valley Pool Table 128, 414
Hasps 125-132
Headlamp, Trident LED 40
Heat Gun 54, 94
Heat Shrink Tubing 23
Hex Key Sets 65
Hex Socket Drivers 61
Hockey Game Parts A22 401
Hockey Mallets A22 401
Holster For Sammy Shotgun 354-355
Holsters, Tool 68
Hook-Up Wire 23, 373
Hoppers, Azkoyen 205
Horizontal Analyzer, Sencore 89
Hose For Sega Gun 355
Hot Dog Lamps 18, 398
Hotrizon Electronic Retro-Fit Pool Table Kit . . 409
Hubbell Plug And Connector 21
Hus-Key 120
Hydrothunder Molded Seat 297

• I •

I.C. Extraction Tool 52, 58
ICE Games, Replacement Parts For 336-337
Ice Machine Cleaner 106
ICE Super Chexx Hockey Game A32 336
ICT Bill Validators C6 228
ICT NexGen $20 Upgrades 227
Identification Tags 202
Illuminated Pushbuttons 189-202
Imonex Coin Mechs 274
Incandescent Lamps 18
Incredible Technologies Shotgun 331
Incredible Technologies, Parts For 338-339
Industrias Lorenzo C9
Inflating Needle 360
Inner Cylinder Locks 118
Integrated Circuits 50-52
Intergrated Circuit Sockets 52
Interlock Switches 186
Invitational Pool Cloth 402
Isolation Transformer 179, 185
Isopropyl Alcohol 109
Isopropyl Prep Pads 108

• J •

Jack Assembly 27
Jack, CAT 5 27
JAE Connector 35
Jamma Cable Assemblies 186
JCM Power Supply Board 185
Jewelers Screwdriver Set 64
Joust Game A31
Joysticks 305-315
Joysticks, Midway 348
Jukebox & Music Products 372-382
Jukebox CD Player Upgrade Kits 379-380
Jumper Wires 94

• K •

Keep & Carry Nutdriver Kits 62
KEP Nuts 96
Kessler Ellis Counting Meters 218, 416
Kester Flux-Pen 74
Kester Solder Pen 72
Kester Solder Spool 72
Key Ring, Quick Release 120
Key Rings 120-124
Key Switch 302
Key-Bak Key Holders 120-122
Key-Bak Key Reels 121-122
Kiosk Audio AmplifierAnd Accessories 382
Kiosk Printer 371
Klopp Coin Counters And Sorters 209-211
Knife Blades, Utility 67
Knife, Utility 67
Kodicom Digital Video Systems 143-147
Konami Games, Replacement Parts For 340
Konami Gun Hoses, Replacement 333
Konami Shotgun For Crypt Killers 332
Krazy Glue 112
Kroy Labeling Machines 370
Kroy Thermal Printer 370
Krylon Spray Paint 98
Kwik-Koin Coin Dispensers 204

• L •

L.A.I. Group Puck Lock 125
Label Remover 108
Label, Amusement Only 215
Label, For Service Call 215
Label, Out Of Order 215
Label, Price Includes 216
Label, Token Only 215
Label, Warning 215
Label, Cigarette Warning 215
Label, Pay Per Play 216
Labels, Bill Validators 245
Labels, Coin Door 214
Labels, Coin Reject Button 216
Labels, Price 215-216
Labels, Ticket Dispenser 363
Labels, Validator 214
Lamp Shades, Billiard A6 411
Lamp, Clamp-On 38
Lamp, Magnifying Work 63
Lamps 10-11, 14-18
LanRoverPRO CAT 5 Tester 25
Le Pro Cue Tips A16 412
Lectro Truck Stair Climbing System 156
LED Flashlights 39-41
LED Gun Sensor Board 356
LED Insertion Tool 15
LED Light Board, Validator Bezel 14
LEDs 14-15, 202
Leg Leveler Cup 368
Leg Leveler Mounting Plate 369
Leg leveler, Pool Table A17 416
Leg Levelers 368
Lenses, Camera 138
Let's Go Bowling Game A30
Lift Handle Set 130
Light Emitting Diodes 49
Light Fixtures 11
Lighting 10-18
Lights 10-11, 14-18
Lightwave Flashlights 39-40
Line Cord 23
Line Level Switch, PAS Audio Activated 377
Lithium Batteries 38
Lock Cam Adaptors 119
Lock Cams 119
Lock Covers 130
Lock Hasps 125-132
Lock Rings 123
Lock Spacer Collars 123
Locks And Supplies 114-135
Locks, Cam 115-119
Locks, Switch 118
Loctite 242 Threadlocker 112
Lubriplate 110
Lufkin Power Tape Measure 69
Lumbar Support Belts 162

• M •

Machine Transport Covers 159
Marquees, Midway 349-350
Mag Stripe Reader Cleaning Card 100
Magline Hand Trucks 148-154
Maglite Flashlight 39
Magna Whatcha-Callit Kit 66
Magner Coin Sorters 212
Magner Currency Counter 212
Magnetic Pick-Up Tool 56
Magnetic Screwdrivers 66, 315
Magnetic Switch 21
Magnifier, Third Hand 59
Magnifying Fluorescent Work Lamp 63
Mali Pool Cloth A7 C8 405
Mali Pool Cloth Colors A7
Mallets, Redemption 360
Mallets, Hockey A22 401
Manuals, Midway 348-349
Maple Pro Cue Stick C12 422
Markers, Throw Line A26 398
Marking Pen, Cable Tie 37
Mars Bill Validators 229-238
Mars Light, Mini 390
Masking Tape 99
Master Cue Chalk A4 417
Master Lock Hasp 125
Master Lock Padlocks 126
Material Handling Equipment 148-162
Max Force Combo Security Board 352
Mech Holder System, Coin Door 253
Mega Button Assembly 199
MEI 1,000 Bill Capacity Magazine 236
MEI AE2400 Series Bill Validators 229
MEI AE2600 Series Bill Validators 230
MEI AE2800 Series Bill Validators 231
MEI Bill Programming Modules 225
MEI Bill Validator Accessories 234-238
MEI Bill Validator Mounting Kits 245
MEI Bill Validator Service Center 222
MEI Bill Validators 229-238
MEI LE Series Bill Validators 232
MEI Trade-Up Program 226
MEI Upgrade Kits For Rowe Jukeboxes 237
MEI VN Series Bill Validators 233
Meltec Boom Ball 361
Memory Card, 32MB 72-Pin SIMM 342
Mercury Ultra Pool Cloth A8 402
Merit Industries, Inc., Parts For 341-342
Metal Burnisher 69
Meters 217-219
Microfiber Cleaning Cloths 102
MicroTouch Monitor 177
Midway Artic Thunder Seat 293
Midway Bezels 344
Midway Chassis 345
Midway CPUs 345
Midway Decals 345-348
Midway Game Parts 343-352
Midway Games, Seats For 296-301
Midway Hard Drives 348
Midway Joysticks 348
Midway Manuals 348-349

Midway Marquees 349-350
Midway Miscellaneous Parts 352
Midway Monitors 350
Midway Motors 350
Midway Optical Guns 350-351
Midway Pedals 351
Midway Potentiometers 351
Midway Pushbuttons 344
Midway Seats 351
Midway Service Center C14 343
Midway Shifters 352
Midway Shotgun For Carnevil, Replacement . 332
Midway Speakers 352
Midway Steering Wheels 352
Mid-Width Access Door 263
Mid-Width Validator Door 256
Millennium Padlock 125
Millipede Game A30
Mills Playfield Wax And Cleaner . . . 105, 357, 395
Mini Dust Gun 106
Mini Post Rubber 384
Mini Spotlight Reflector Assembly 14
Mini-Bak ID Cardholder 120
Mini-Flipper Rubbers 384
Mini-Lamp For Casino Signs 14
Mini-Lamp Sockets 17
Mini-Lamps 14, 16-18
Mirror, Telescoping 56
Missile Command Game A30
Mocap Boxing Gun Hose, Replacement 333
Mod-U-Line Fluorescent Lamps 11
Molex Connectors 31-32
Molex Extractor Tools 31, 69
Molex Pins 31-32
Molex Terminals 31-32
Momentary Contact Pushbuttons 201
Momentary Switch 42
Money Bag 213
Monitor Analyzer, Sencore 88, 90
Monitor Bezels 181
Monitor Chassis Boards 179
Monitor Extension Cable 33, 166
Monitor Repair Center C13 168
Monitor Repair Kits 180
Monitor Signal Generator, Sencore 88
Monitor, Dart Machine 398
Monitor, Plasma Display A27 166
Monitor, Surveillance 139
Monitor, Wells-Gardner Digital 339
Monitors And Components 163-181
Monitors For Golden Tee Fore Games 339
Monitors For Merit Games 342
Monitors With Touch Screens 178
Monitors, Midway 350
Monitors, Vision Pro 163-166
Motors, Midway 350
Mounting Pads For Cable Ties 37
Moving Pad 159
Mr. Pinball Machine List 395
Mr. Zip Graphite 110
Ms Pac-Man Cocktail Table Overlay 353
Ms Pac-Man Cocktail Table Underlay 353
Ms Pac-Man Marquee 353
Ms Pac-Man Replacement Joystick 307
MTX Speakers A28 373-374
Multimeters 91-93
Multiplexers 141-142
Mylar Cleaner 105

• N •

Namco Cybercycle Seat 353
Namco Final Furlong Horse Head 352
Namco Final Furlong Saddle 352
Namco Gun Holster Protector Kit 334
Namco Gun Lens 352
Namco Nose Guard, Replacement For 354
Namco Solenoid Assembly, Replacement . . . 333
Namco Tach Cover 353
Namco, Replacement Parts For 352-354
National 222 Remote Lockout Device 134
National Changetron Upgrade Kit 238
National Cue Chalk A5 417
Needle, Inflating 360
Needles, Phonograph 377
Neotec Monitors 175-176
NexGen Currency 223-227
Nortech Easy-Lift Pool Table Mover 158
Nortech Slate Lifter Kit 160
Nose Guard For Namco Recoil Guns . . . 333, 354
Novus Cleaner And Polish 105, 395
NRI Electronic Coin Validator System 275
NRI Stealth Coin Validator System 276
NTE Multimeter 93
NTE Semiconductors 45
Nutdriver Sets 62-63
Nutdrivers 62-63
Nuts 96

• O •

Offroad Challenge Molded Seat 296
Offroad Thunder Molded Seat 299
Oil Eater Cleaner / Degreaser 112
Oil Eater Hand Cleaner 104
Oilers 110
Okay's Key Safe 123
On/Off Switch 186
On-Off Button 42
Optic Gun Boards 328
Optic Sensor For Namco Recoil Guns 353
Optical Gun Adapter Harnesses 328, 335
Optical Gun Hardware Kits 334
Optical Gun Holsters 327, 334
Optical Gun PCB Tester 334
Optical Guns And Accessories 325-335
Optical Guns Replacement Hoses . 326, 328, 333
Optical Guns, Midway 350-351
Optical Recoil Guns 328
Order Form, Happ Controls 423-424
Oscilloscope 92
Overlay, Control Panel 368
Overlays, Rowe Bill Changer 238
Over-Under Door Hasps 128-129, 131-132

• P •

P.C. Board Holder 184, 366
P.C.B. Support Spacers 36
PACE Soldering / Desoldering Equipment . 79-87
Packaging Tape 99
Pack-N-Roll Z-Cart 162
Pac-Man Replacement Joystick 307
Pad, Moving 159
Padlock Cover 129
Padlocks 125-126
Paint, Spray 98
Panel Clamp 368
Panther Cue Stick 422
Paper Towels 103
Parts Cleaning Brush 110
Patch Cords, CAT 5E 25
Pattern Generator, Genie-One 181
PCB Mounting Feet 366
Pea Shaker A19 416
Peas A19 416
Pedal Controls 301-304
Pedals, Midway 351
Perfect 360 Joystick 307
Phonograph Needles 377
Picabond Crimp Tool 33
Piggy-Back Terminal 35
Pinball Blank Door 258
Pinball Cart 157, 390
Pinball Coils & Sleeves 386
Pinball Door 258
Pinball Hasp 127
Pinball Leaf Switches 390
Pinball Machine Care And Maintenance Book 395
Pinball Parts 383-395
Pinball Playfield Glass 390
Pinball Playfield Switch Assemblies 388
Pinball Rubber Ring Sizing Chart 383
Pinball Rubber Rings 384-385
Pinball Switches 387-391
Pinball Target Switches 387
Pinball Validator Door 258
Pinballs 385
Plasma Display Monitor A27 166
Platform Trucks 158
Platt Tool Cases 60
Playfield Cleaner And Polish 103, 395
Playfield Lights 390
Playfield Post Caps 385
PlayMeter Magazine C9
PLCC Extraction Tool 52
Plexi-Clean Cleaner And Polisher 101
Pliers 55-58
Plumb Hammers 63
Pocket Liner Push-Lock Screws 418
Pocket Liners A17 418
Poker / VLT Pushbuttons 195-196
Poker Remote 184
Polypropylene Tape 99
Pool Ball Cleaner 103
Pool Ball Racks A3 408
Pool Ball Set, Marbelized A2 408
Pool Ball Tray A3 409
Pool Balls A2 407
Pool Chalk Saver A5 418
Pool Cloth A7-A9 402-405
Pool Table Accessory Kit A20 410
Pool Table Brushes 409
Pool Table Covers 416
Pool Table Cushion Rail Set 415
Pool Table Cushion Rubber 415
Pool Table Kit, Blacklite 408
Pool Table Kit, Horizon Electronic Retro-Fit . . 409
Pool Table Leg Leveler A17 416
Pool Table Lights A6 411
Pool Table Mini-Mover 415
Pool Table Movers 158, 415
Pool Table Spots A19 409
Portasol Butane Soldering Iron 70
Portasol Soldering Kit 70
Posi-Lok Illuminated Buttons 197
Potentiometers 293, 315, 351, 365
Pouch Wallet 214
Power Back-Up Systems 187
Power Controller, Remote 185
Power Cords 28
Power Pro Power Supplies 182-183
Power Strips 29
Power Supplies 182-188, 339, 341
Power Supply Analyzer, Sencore 87
Power Supply Cooling Fan 184
Power Supply Cords 186
Power Supply For Golden Tee Fore 2003 . . . 183

Power Supply For Merit Megatouch 184
Power Supply For Pot-Of-Gold 184
Power Supply Quick Reference 187
Power Supply, 12V DC 137
Power Supply, 24V AC 142
Power Supply, General Purpose 67, 185
Powerline Filters 186
Premier Pool Table Accessory Kit A20 410
Premier Soccer, Replacement Parts For . A21 401
Premier, Replacement Coils For 386
Prep Pads 108
Pressure Gauge, Ball 360
Price Labels 215-216
Printer Ribbons 371
Printers 370-371
Pro Challenger Electronic Dart Boards . . A23 396
Procell Batteries 38
Protect-A-Lamp Safety Sleeves 11
Prowick Desoldering Braid 73
PS/2 Extension Cable 33, 324
Puck Lock Hasp 125
Puck Locks 125
Pucks, Hockey 401
Pucks, Shuffle Alley 357
Pump For Inflating Balls, Hand 360
Punchdown Tool 27
Pushbutton Covers 202
Pushbutton Sets For IGT Slot Machines 198
Pushbutton With Horizontal Microswitch 200, 338
Pushbutton Wrench 202
Pushbuttons 189-202
Pushbuttons, Midway 344

• Q •

Quad, 4-Channel 140
Quantum Hanging Systems 162
Quantum Shelf Bins 161-162
Quarter Coin Holder A20 398, 416
Quick Disconnect Terminals 35
Quik Stik Epoxy 102

• R •

Racquetballs 361
Radial Capacitors 46-48
Rail Brush A16 409
Ratchet Tie-Downs 160
Rayovac Flashlight 39
Razor Blade Holder And Scraper 67, 98
Razor Blades 67, 98
Receptacle Tester 41
Recoil Gun Nose Guard, Namco 333
Recoil Gun Optic Sensors, Replacement For Namco 353
Recoil Gun Solenoid Assembly 354
Recoil Optical Guns 328
Red Board For Happ Controls Trackballs 324
Redemption Game Balls 361
Redemption Mallets 360
Redemption Parts And Accessories 360-363
Redemption Tickets 279, 362
Reel Mechanism 366
Reject Button Assembly 220
Remote Volume Controls 377
Remote, Poker 184
Repair Center, Monitor C13
Replay Magazine C13
Report Book, Collection 212
Resistor Packages 49
Resistors 49-50
Retainer For Video Game Marquee 368
Retract-A-Badge ID Cardholder 120
Ring Terminals 35
Rip-Tie Cablecatch 37
Rivets 97
RJ11 Duplex Adaptor 27
RJ11 Plugs 27
RJ-45 Connectors 27
Robotron Game A31
Roll Pins 96
Roll Top Safes 133
Roll-Down Acceptor, Electronic 270
Roll-Down Acceptor, Imonex 274
Roll-Down Acceptors 270-271, 274
Roller And Idler Kits For Trackballs 324
Rollover Switch 387
Rope Lighting 14
Rotary & Optical Joystick 307
Rowe Bill Changer Overlays 238
Rowe Bill Changer Rebuilding Kits 246-247
Rowe Bill Changer Replacement Parts . . 246-248
Rowe Bill Changer Upgrade Kits 238
Rowe CD-100 Title Strip Cards 377
Rowe Changer Coin Entry Block Out Plate . . . 236
Rowe Jukebox Upgrade Kits, MEI 237
Rowe Jukebox, Parts For 377, 379, 381
Rowe R-89 Selection Overlay 377
Rowe Title Page For CD-100 377
RS232 Bill Validator Integration Kit 239
RS232 Bill Validator Interface Board 239
Rubber Bumper, Cue Stick 419
Rubber Bumpers, Pinball 385
Rubber Ring Cleaner 103
Rubber Rings, Pinball 384-385
Rush 2049 Molded Seat 301

• S •

Safes 133
Safety Glasses 67
Safety Solvent Degreaser 112
Safety Tape 99
Sammy Replacement Parts 354-355
Sammy Scope Gun 330, 355
Sammy Shotgun Barrel Holster 335
Sammy Shotgun, Pump Action 355
Sammy USA Security Bar Kit 128
San Francisco Rush The Rock Molded Seat . . 300
Sandpaper For Dynamo Air Hockey Tables . . 363
Sani-Tuff Waterless Wipes 103
Santronics AC Sensor 38
Sargeants Crimping Tool 34, 57
Scale Clean, Everpure 106
Scorpion Flashlight 39
Scot's Citrus Clean Remover 109, 410
Screwdriver Bits 66, 315
Screwdriver Tool Set 63-66
Screwdriver, Hi-Voltage Testing 41
Screwdriver, Magnetic 66
Screwdrivers 63-66
Screws 95, 97
Seat For Artic Thunder 293
Seat Pedastal Assembly 295
Seat Slide Assemblies 294
Seats For Midway Games 296-301, 351
Secure-A-Key 120
Security Bar Kit For Sammy USA 355
Security Bar, Steel 252
Security Hasp For Golden Tee Golf 338
Security Pouch 68
Security Products 114-135
Security Rings 123
Sega Gun Hoses, Replacement 333
Sega Pinball, Replacement Parts For 391
Sega Replacement Parts 355-356
Sega, Replacement Coils For 386
Seizers 58
Sencore Test Equipment C10 87-91
Shackle Guard Hasp 129
Shears 55
Shelf Bins 160-162
Shifters 289-292, 352
Shooter Tips 384
Shotgun For Big Buck Hunter 339
Shotgun For Konami Crypt Killers 332
Shotgun For Midway Carnevil 332
Shotgun For Sammy Deer Hunter 354
Shotgun, Pump Action 330, 338
Showcase Sliding Lock Assembly 118
Shuffle Alley Bowling Pins 356
Shuffle Alley Cover For Williams 357
Shuffle Alley Parts 356-358
Shuffle Alley Pucks 357
Shuffle Alley Rebound Rubber 356
Shuffle Alley Rollover Wire 357
Shuffle Puck 360, 365
Shuffleboard Pucks 360
Side Mount Coin Acceptor Box 266
Silicone Spray 104, 110
Silver Cup Cone Chalk A5 417
Silver Cup Cue Chalk A4 417
Silver Cup Premium Talc Powder A4 417
Simple Green Cleaner 109
Simplex Connectors 26
Skeeball Game Parts 363, 369
SkipDoctor CD Repair Tools 378
Slam Nut Assembly 134
Slate Lifter Kit 160, 415
Slate-Mate Recovery Kit 404
Slot Machine Cleaner 101
Slot Machine Mover 159
Slot Tower Light 366
Smoke Absorber, Hakko 78
Smoke Detector Camera 137
Snap Switches 42-43, 315
Soccer Ball 361
Soccer Game Parts A21-A22 401
Sockets, Fluorescents 14
Sockets, Mini-Lamp 17
Solder Pen 72
Solder Pencil 72
Solder Popper 71
Solder Spool 72
Soldering Equipment 70-87
Soldering Gun 71
Solenoid Assembly For Namco Guns . . . 333, 354
Spacers, P.C.B. Support 36
Speaker Switch, Audio Activated 377
Speaker System, Ceiling 374
Speaker Transformers 372
Speaker Wire 373
Speakers 352, 372-376
Spider Power Cord 28
Spider Stompin Foot Playfield Plexi 358
Sports Arena Bulbs, Replacement . . 14, 355, 369
Spray Adhesive 111
Spray Paint 98
Spring Hook & Scribe 69
Spur Washer 124
Square Button Housing 201
Squeak'N Clean Coffee Pot Cleaner 106
Stainless Steel Cleaner 105
Standard Change-Makers Changers 203-204
Star Bit Set, Tamper Resistant 314
Starters, Fluorescent 13
Static Shield Bags 53
Stealth Coin Validator System 276
Steamlight Flashlights 39-40

Steering Shaft For Sega 356
Steering Wheel Assemblies 284-288, 352
Step-Up Transformer 185
Stern Pinball, Replacement Coils For 386
Stern Pinball, Replacement Parts For 391
Stevens Hand Trucks 155
Stools, Game Or Bar A20 364
Stop Nuts 96
Subminiature Joystick 313
Sun-Glo Shuffleboard Wax 104, 358
Super Chexx Hockey Game, ICE A32 336
Super Joystick 306
Superlite Folding Truck 157
Sure Shot Hand And Cue Conditioner . . A5 418
Surge Protectors 29-30
Surge Suppressors 29, 187
Surveillance System 142
Swabs, Cleaning 109
Swag Fixture Kits 411
Switch Holder 41
Switch Locks 118
Switch, Anti-Slam 387
Switch, Audio Activated Speaker 377
Switch, Magnetic 21
Switch, Momentary 42
Switch, On-Off 42
Switch, PAS Audio Activated Line Level 377
Switch, Weatherproof 42
Switcher, Camera 140
Switches 41-44, 293, 315
Switches, Coin 42, 220
Switches, Interlock 41
Switches, Pinball 387-391
Switches, Snap 42-43
Switches, Toggle 41

• T •

Table Spots 409
TableMaster Pool Cloth 403-404
Talcum Dispenser A4 417
Tamper-Resistant Star Bit Set 67
Tap And Drill Set 64
Tap Splices 34
Tape Dispenser 99
Tape Measure, Lufkin 69
Tape Remover 103, 109
Tape, Cloth 98
Tape, Touch Screen 179
Tapes 98-100
Tapes, VHS 139
Target Switches, Pinball 387
Target, Drop 385
Tatung Monitor Parts 180
Taurus Cue Stick 422
TechClean TwillWipe, TechSpray 53
TechSpray Cleaners 26, 107-108
TechSpray Desoldering Braid 73
TechSpray TechClean TwillWipe 53
TechSpray Zero Charge Cleaner 53
Tefco Master Table Spots A16 409
Teflon Pipethread Sealant Tape 98
Telescoping Mirror 56
Teraburst Gun Hose, Replacement 333
Tergo Ultra Microfiber Cleaning Cloth 102
Terminal, Piggy-Back 35
Terminals, Flag 34
Terminals, Fork 35
Terminals, Quick Disconnect 35
Terminals, Ring 35
Terminals, Wire 34
Terminator II Gun Switch 352
Test Lead Sets 94
Tester, Continuity 41
Testing Screwdriver, Hi-Voltage 41
T-Handle Assemblies 134
T-Handle Flange 134
T-Handle Kits 135
T-Handle Threaded Studs 135
The Bull Starts Here Throw Line Marker . A26 398
The Solution 378
Thermal Printer Cleaning Card 100
Thermal Printer Clean-Penn 100
Thermometer, Hakko 75
Third Hand With Magnifier 59
Throw Line Markers A26 398
Thumb Switch Asemblies 314
Ticket Bin 279
Ticket Dispenser Blanking Plate 362
Ticket Dispenser Doors 278-279
Ticket Dispenser Labels 215, 279, 363
Ticket Dispenser Mounting Plate 279, 362
Ticket Dispensers 277, 362
Ticket Door, Slim 266, 279, 362
Tickets, Redemption 279, 362
Tilt / Plum Bob Assembly 385
Timer, Accumulating Coin Vending 364
Timer, Credit / Accumulator 364
Titan Pool Cloth A8 402
Title Page, Rowe 377
Title Strip Cards, Rowe 377
Tivoli Style Lamp 14
T-Molding 366
T-Nut 416
Toggle Switches 41
Tokens 211
Tool Bag 60
Tool Cases 60
Tool Holders 68
Tool Kit, Alignment 54
Tool Kit, Anti-Static 53
Tool Kit, Professional Electronic 52, 60
Tool Kit, TV Alignment 181
Tool Kits 54, 60-64, 66, 69
Tool Pouches 68
Tool Sheaths 68
Tools 54-97
Top Fire Button Joysticks 308
Tornado Foosball, Replacement Parts For A21 400
Tornado Hockey, Replacement Parts For A22 401
Torx Wrench Set 314
Torx Wrenches 66, 314, 334
Touch Monitor, 3M MicroTouch 177
Touch Screen Controllers 178
Touch Screen Security Hasp 128
Touch Screen Tape 179
Touch Screens 178
Touch Screens For Merit Games 342
Tour Edition Pool Cloth A8 404
Tournament Pool Cards A20 419
Tournament Soccer, Parts For A21 401
Tovis Monitors C7
Towelettes, Moist 103
TPI Digital Multimeters 91-92
Trackball Bearings 324
Trackball Enclosure 323
Trackball For Golden Tee Fore 338
Trackball For PGA Tour Golf 338
Trackball Interface Kit, USB-PS/2 323
Trackball Mounting Kits 322
Trackball Repair Kit 324
Trackball Roller And Idler Kits 324
Trackball Support Plate 323
Trackballs And Accessories 317-324
Trackwheel Control 313
Transformer, Isolation 179, 185
Transformer, Step-Up 185
Transformers, Flyback 180
Transistors 48
Triacs 49
Triangle Racks, Pool Ball A3 408
Trident LED Headlamp 40
Trigger Joysticks 309-310
Trigger Switch Assemblies 314
Tripp Lite UPS Systems 187
Tripp-Lite Surge Suppressor 29
Tubing, Heat Shrink 23
Tubular Key Holder 124
Tufoil Lubit 8 110
Turbo Throttles 290
TV Alignment Tool Kit 54, 181
Tweeten Cement A17 412
Tweezers 56
Two-In-One Stubby Screwdriver 64

• U •

U-Lift Pool Table Mover 158, 415
Ultimate 150 Watt Power Supply 183
Ultimate Joystick 305
Ultimate Pushbutton 200
Ultraflex Plastic Dart Tips 397
Universal Joystick 306
Urn Cleaner 106
USB Extension Cable 33, 324
USB Game Control Interface 316
Utility Box 160
Utility Knife 67
Utility Knife Blades 67

• V •

Vacuum Cleaner 113
Validator Door, Mid-Width Upstacker 256
Validator Door, Over / Under Stackerless 252
Validator Door, Over / Under Upstacker . 250-251
Validator Door, Slim 266
Validator Doors 267
Validator Hasp 134
Validator Label Sets 214, 245
Validator Mounting Kits 245
Validator Replacement Belts 249
Validator Service Center 222
Validator Vault 267
Validators 222-249
Valley Dart Games, Replacement Parts For . . 399
Valley Pool Table, Replacement Hasp For . . . 414
Valley Pool Table, Replacement Parts For . . . 420
Valley Supreme Cue Stick 422
Valley Teflon Ultra Pool Cloth A8 402-403
Van Inner Cylinder Locks 118
Vandal Mark Remover 101
Vault, Validator 267
Velcro Cable Ties 36, 100
Velcro Hook And Loop Tape 36, 100
Vending Dispensing Motor 364
Vending Timer, Accumulating 364
Vending Times Magazine C11
VHS Tapes 139
Video Brightener 181
Video Cassette Recorders 140
Video Game Marquee Retainer 368
Video Screen Cleaner, Touchdown 104
Video Surveillance Equipment 136-147
Vision Pro Monitors 163-166
Volume Controls 377

• W •

Wallet, Nylon Pouch 214
Washer, Spur. 124
Washers 96-97
Watchdog Remote Power Controller 185
Wax, Shuffleboard 104
WD-40. 110
Web Belts 157
Web Pockets, Billiard Table A17 409
Weller Glue Gun 69
Weller Soldering / Desoldering Equipment 70-73
Wells-Gardner Coin Door Parts 280-281
Wells-Gardner Digital Monitor 339
Wells-Gardner Front Plate Replacement Parts 283
Wells-Gardner Genie-One Pattern Generator 181
Wells-Gardner Monitors 169-174
Wells-Gardner Pinball Door Parts 282
Wesco Hand Trucks 157, 159
Wheel Assembly, Cabinet. 367
Wheel Driver PCB Assembly. 352
Whisk Broom. 109
Width Coil. 179
Wildcat Cleaners. A19 103-105, 357, 395, 406,410
Williams Pinball, Replacement Parts For . 392-394
Williams, Replacement Coils For 386
Wipes 103, 107
Wire And Cable 23-25
Wire Brush. 109
Wire Connectors 23
Wire Dispenser Kit 34
Wire Strippers 34, 57-59
Wire Terminals 34
Wire Wrap. 23
Wire, Hook-Up 23, 373
Wire, Speaker 373
Wires, Jumper. 94
Wiss Shears. 58
Wrap, Spiral Cut 23
Wrench, Pushbutton 202
Wrenches. 57-58
Wrist Coil 123
Wrist Strap kit 53
Wypall L40 Wipers 103

• X •

Xcelite Tools. 54-59, 61-65, 69

• Z •

Zero Charge Cleaner, TechSpray 53
Zoom Spout Oiler. 110

ADVERTISERS INDEX (IN ALPHA ORDER)
(See Color Insert in Center of Book)

ADVERTISER	PAGE
CashCode Bill Validators	C3
Championship Billiard Cloth	C4
Cherry Switches	C5
Happ Controls Line Card	C15-C16
Happ Controls MaplePro Cue Stick	C12
Happ Controls Monitor Repair Center	C13
Happ Controls Web Site	C1-C2
ICT Bill Validators	C6
Industrias Lorenzo	C9
Mali Billiard Cloth	C8
Maple Pro Cue Stick	C12
Midway Service Center	C14
Monitor Repair Center	C13
PlayMeter Magazine	C9
Repair Center, Monitor	C13
Replay Magazine	C13
Sencore Test Equipment	C10
Tovis Monitors	C7
Vending Times Magazine	C11

HAPP CONTROLS SELLS BRAND NAME QUALITY

Products and brand names of items represented in this catalog are trademarks of their respective owners.

FLUORESCENT LAMPS

- Highlight your products with these top quality fluorescent lamps
- Name brands
- Sold in case quantities only

NEW AND IMPROVED BULB PACKAGING
ELIMINATES BULB BREAKAGE CAUSED DURING SHIPMENT
WE WILL GUARANTEE IT!

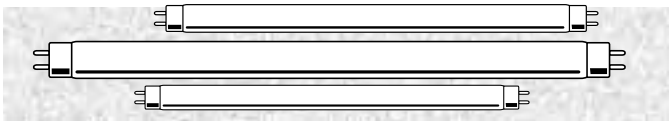

Part Number	Fluorescent	Watts	Length	Case Qty.	Price per ea. L/1 Case	L/3 Cases
91-3000-00	F4T5/CW	4	6"	25	2.85	2.50
91-3001-00	F6T5/CW	6	9"	25	2.60	2.10
91-3002-00	F8T5/CW (Philips)	8	12"	25	2.00	1.85
91-3002-01	F8T5/CW (Sylvania)	8	12"	24	2.85	2.20
91-1238-00	F8T5/BLB	8	12"	24	10.95	10.30
91-3004-00	F13T5/CW	13	21"	24	4.80	4.20
91-3005-00	F13T8/CW	13	12"	24	6.25	5.70
91-0192-00	F13.5T8/CW	13.5	12"	50	3.45	3.15
91-3006-00	F14T8/CW	14	15"	24	3.25	2.95
91-3006-01	F14T8/CW (Sylvania)	14	15"	24	3.35	3.10
91-1113-00	F14T12/CW	14	15"	30	3.25	2.85
91-3008-00	F15T8/CW (Philips-Alto)	15	18"	24	1.85	1.70
91-3008-04	F15T8/CW (Philips-Not Alto)	15	18"	96	1.10	1.05
91-3008-01	F15T8/CW (Sylvania)	15	18"	24	3.10	2.50
91-3008-02	F15T8/CW (GE)	15	18"	24	1.70	1.60
91-3042-00	F15T8/D	15	18"	24	3.15	2.50
91-3018-00	F15T8/BLB	15	18"	6	8.75	8.20
91-3043-00	F15T12/D	15	18"	30	4.30	3.10
91-0911-00	F15T12/CW	15	18"	6	3.95	3.35
91-0183-00	F017/865XP/ECO	17	24"	30	4.40	4.15
91-3009-00	F18T8/CW/K/24 F24T8/CW/4	18	24"	24	3.35	2.70
91-3010-00	F18T8/CW/K/26 F26T8/CW	18	26"	24	3.50	2.85
91-3011-00	F18T8/CW/K/28 F28T8/CW/4	18	28"	24	2.95	2.65
91-3012-10	F18T8/CW/K/30 F30T8/CW/4	18	30"	24	3.10	2.75
91-0652-00	F20T12/BLB	20	24"	6	14.50	13.80
91-0097-00	F20T12/CW/21"	20	21"	30	5.10	4.85
91-0088-00	F025/741 (T8)	25	36"	30	4.85	4.25
91-3014-00	F20T12/D	20	24"	30	3.95	3.35
91-3015-00	F20T12/D/22	20	22"	30	4.55	3.95
91-0652-00	F20T12/BLB	20	24"	6	14.50	13.80
91-3013-00	F20T12/CW (Alto)	20	24"	30	2.85	2.20
91-0669-00	F22T8/D/24	18	22"	24	4.05	3.75
91-0655-00	F25T8/SPX30	25	36"	24	7.00	6.45
91-3016-00	F25T12/D/28	25	28"	24	4.10	3.50
91-3017-00	F25T12/CW/28	25	28"	24	3.05	2.75
91-3039-00	F25T12/CW/30	25	30"	24	3.35	3.10
91-0666-00	F25T12/WW/33	25	33"	24	8.65	7.85
91-3020-00	F25T12/CW/33	25	33"	30	3.80	3.25
91-3025-00	F25T12/D/33	25	33"	30	3.95	3.35
91-0931-00	F26T8/CW/4	19	26"	24	4.85	4.70
91-3021-00	F30T8/CW	30	36"	24	2.95	2.65
91-0115-00	F30T8/D	30	36"	24	3.85	3.85
91-0203-00	F30T8/BLB	30	36"	24	3.85	3.85

ECONOMY FLUORESCENT LAMPS

- Top Quality
- Sold by the case only

NEW AND IMPROVED BULB PACKAGING
ELIMINATES BULB BREAKAGE CAUSED DURING SHIPMENT
WE WILL GUARANTEE IT!

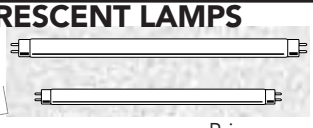

Part Number	Fluorescent	Watts	Length	Case Qty	Price per ea. L/1 Case
91-3000-10	F4T5CW	4	6"	100	1.55
91-3001-10	F6TSCW	6	9"	50	1.45
91-3002-10	F8T5CW	8	12"	50	1.55
91-0011-10	F10T8CW	10	14"	25	1.90
91-0023-00	F14T8CW	14	15"	25	2.35
91-3042-10	F15T8DW	15	18"	25	2.25
91-3008-03	F15T8CW	15	18"	25	1.15

Part Number	Fluorescent	Watts	Length	Case Qty.	Price per ea. L/1 Case	L/3 Cases
91-3022-00	F30T12/CW/RS	30	36"	30	2.55	2.40
91-3023-00	F30T12/D/RS	30	36"	30	2.65	2.40
91-3024-00	F32T8/SP41	32	48"	36	5.15	4.90
91-0200-00	F32T8/SP65	32	48"	36	5.15	4.90
91-3026-00	F35/CW/U3	35	24"	12	10.05	10.05
91-1185-00	F36T12/CW/SP	30	36"	30	8.55	7.95
91-3051-00	F40T8/SP41	40	60"	24	7.05	6.55
91-3050-00	F40T10CW	40	48"	25	7.95	7.25
91-0958-00	F40BLB	40	48"	6	15.65	13.55
91-3027-00	F40/CWX* (T-12)	40	48"	30	2.50	1.90
91-3028-00	F40DX** (T-12)	40	48"	30	2.60	2.00
91-0955-00	F42T6/CW/SP	25	42"	24	13.90	12.60
91-1188-00	F42T12/CW	36	42"	24	10.20	9.60
91-3052-00	F48T12/D-SP	40	48"	30	4.90	4.30
91-1243-00	F60T12/CW	50	60"	30	6.45	5.90
91-3029-00	F60T12/D-SP	50	60"	15	4.45	3.90
91-0668-00	F64T12/CW	50	64"	30	5.15	4.50
91-3030-00	F64T12/D-SP	52	64"	30	4.15	3.65
91-3031-00	F72T12D-SP (Alto)	55	72"	15	4.10	3.85
91-3032-00	F72T12/CW-SP	56	72"	15	5.70	5.00
91-3033-00	F96T12/CW-SP***	60	96"	15	6.15	5.55

*Replacement for F40CWI **Replacement for F40DI ***F96 lamps shipped by truck only

HIGH OUTPUT FLUORESCENT LAMPS

- Extra bright illumination increases the attractiveness of your machines, creating more demand for your products
- All high output lamps are recessed double pin contacts
- Top quality name brands
- Sold in case quantities only

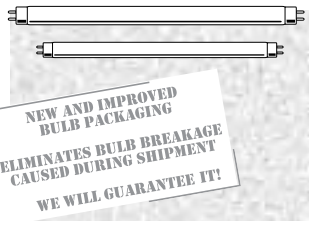

Part Number	Fluorescent	Watts	Length	Case Qty.	Price per ea. L/1 Case	L/3Cases
91-1175-00	F24T12/CW/HO	35	24"	24	6.35	5.80
91-0077-00	F36T12/CW/HO	45	36"	30	8.55	7.95
91-0909-00	F48T12/CW/HO	60	48"	24	5.90	5.20
91-0672-00	F48T12/D/HO(Alto)	60	48"	15	5.15	4.75
91-0908-00	F60T12/CW/HO	75	60"	30	7.30	6.75
91-3034-00	F64T12/CW/HO	80	64"	15	7.50	6.35
91-3035-00	F64T12/D/HO	80	64"	15	7.10	6.75
91-3036-00	F72T12/D/HO	85	72"	15	5.45	4.60
91-0022-00	F72T12/CW/HO	85	72"	15	5.15	4.70
91-3040-00*	F96T12/CW/HO/CT	110	96"	15	6.15	5.55

*F96 lamps shipped by truck only

LAMP SELECTION GUIDE

Bulb Diameter	T5=5/8", T8=1", T10=1-1/4", T12=1-1/2"
Base	MDB= Medium Bi Pin, MNB=Miniature Bi Pin, SP Pin=Single Pin, RDC=Recessed Double Contact
Length	Measure full length from pin tips
Type	BLB =Black Light Blue HO= High Output. For use in outdoor signs. Starter required CW = Cool White D = Daylight IS = Instant Start. Slimline type with 1 pin. No starter required PH = Preheat. Requires starter PH-RS = Preheat Rapid Start. May be used with or without starter RS = Rapid Start. No starter required UBENT = U shaped lamp WW = Warm White

© HAPP CONTROLS

FLUORESCENT LIGHT FIXTURE

- This popular lamp fixture easily mounts anywhere. Ideal for video game marquee.
- Pre-wired with everything needed to illuminate an area. Includes starter, ballast and sockets
- Includes F15T8/CW fluorescent lamp on 49-1001-00 & 49-1001-240V

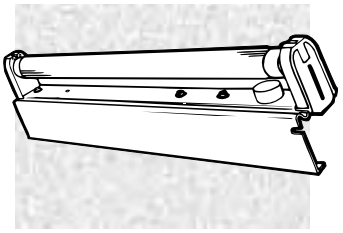

Part Number		Price per ea.	L/12
49-1001-00	Fluorescent Lamp assy. complete 120V with F15T8 Lamp	19.30	16.30
49-4027-00	Fluorescent Lamp assy. 120V w/o Lamp For 24" Lamp	16.35	14.50
49-1001-240V	Fluorescent Lamp assy. 240V 50Hz with F15T8	34.75	28.70

MOD-U-LINE/CIRCLINE FLUORESCENT LAMPS

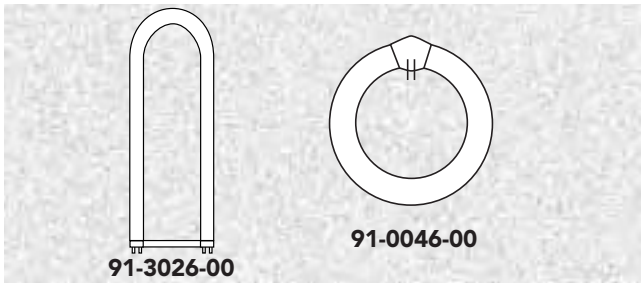

Part Number		Watts	Length	Case Qty.	Price per ea. L/1 Case
91-3026-00	F40CW/U/3	40	24"	12	10.05
91-0159-00	FC6T9/CW/RS	22	6.5"	12	8.00
91-0046-00	FC8T9/CW	22	8.25" dia.	12	8.15
91-0099-00	FC12T9/CW/RS	32	12" dia.	12	8.15
91-0088-00	FO25/741(T8)	25	36"	30	4.85

PLUG-IN COMPACT FLUORESCENT LAMP

- Replaces 150-Watts incandescent lamp
- Flat profile makes a perfect choice for slim, attractive luminaries
- Works great on either wall or ceiling applications
- 8" x 8" x 1"
- 4 pin plug-in lamp socket

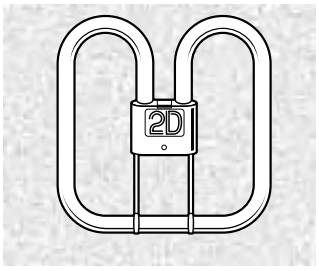

Part Number		Watts	Price per ea.	L/20
91-0918-00	F38/2D/827/4P	5	22.80	20.50

COMPACT FLUORESCENT LAMPS

- Energy and space saving compacts for the new model machines
- Radiates equal amounts of light as traditional fluorescent, in a fraction of the space
- American made

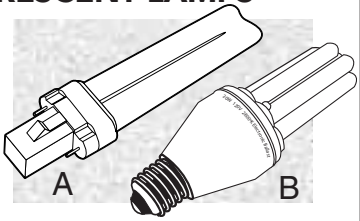

Part Number	Style	Fluorescent	Watts	Price per ea.	L/10
91-3037-00	A	F5 Compact, 2700K	5	4.20	3.95
91-3038-00	A	F7 Compact, 2700K	7	4.65	4.10
91-3041-00	A	F13 Compact, 2700K	13	6.10	4.85
91-1177-00	A	F9 Compact, 2700K	9	4.00	3.65
91-0188-00	A	F9 Compact, 3500K	9	6.10	4.85
91-0191-00	B	F20 Compact, 2800K	20	10.40	8.90

FLUORESCENT LIGHT FIXTURE

- Utility lighting mounts almost anywhere
- Compact size: 18" W x 3.5" D x 1.5" H
- F15T8 fluorescent bulb included
- 5 ft hideaway cordset
- 60 watt light output, uses 15 watts
- On/Off switch
- UV stabilized diffuser
- Mounting screws included
- Proudly Made in USA
- UL & CSA

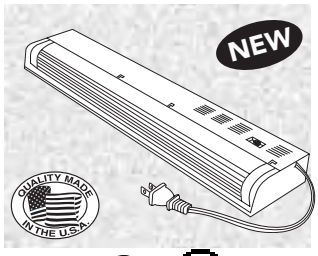

Part Number		Price per ea.
91-0211-00	Fluorescent Light Fixture	11.75

PROTECT-A-LAMP™ FLUORESCENT SAFETY SLEEVE

- Unbreakable clear plastic sleeve protects any area in case of shattering glass
- Reusable
- Includes 2 end caps; accommodates both single and double pin lamps
- Ideal for "reach-in" type machines
- 22", 48" or 56-1/4" in length

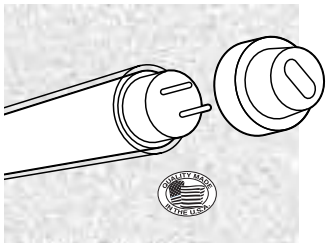

Part Number		Price per ea.	L/12	L/24
91-0079-00	Fluorescent Safety Sleeve for T12 Lamps, 22" Long	1.65	1.55	1.45
91-1172-00	Fluorescent Safety Sleeve for T12 Lamps	3.15	2.85	2.50
91-1183-00	Fluorescent Safety Sleeve for T8 Lamps	3.15	2.85	2.50
91-0098-00	Flourescent Safety Sleeve for T12 Lamps, 56-1/4 Long	3.75	3.50	3.15
91-1179-00	End Caps Only, for T12 Safety Sleeve	1.30	1.15	.95
91-1184-00	End Caps Only, for T8 Safety Lamp	1.30	1.15	.95

CIRCLINE CIRCULAR FLUORESCENT BULB ADAPTER

- Screw-in adapter fixture
- Uses 8.25" diameter, 22 watt circline fluorescent bulb
- Includes bulb
- 12 per case

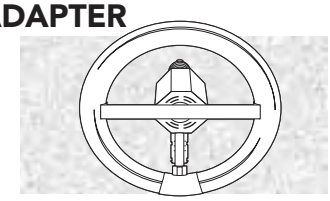

Part Number		Price per ea.
91-0048-00	Circline Fluorescent Bulb Adapter	20.75

Visit Our Web Site:
happcontrols.com
for **NEW** Product Updates!!

BALLASTS

- Top quality ballasts made durable for extra long life
- Low noise
- American made

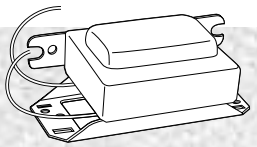

Clamped Core

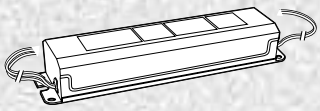

Encased & Potted

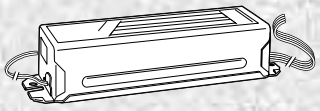

Illustrations are for reference only

Part Number	Same As Advance #	Same As GE#	Watts	Lamp Type	Used On	Volts	Leads Color/Length	No. Lamps	Ballast Type	Price per ea.
49-0468-00	RC-2S85-TP	———	35, 48, 50,60, 75, 80, 85, 100, 110	T12 High Output Rapid Start F48, F60,F64, F72, F84,F96	F24, F36, F42,	120	1 Black 18" 2 Blue 33" 2 Red 33" 2 Yellow 51" 1 White 18"	1	Encased & Potted	42.20
91-0018-00	R-2E75-S-TP	6X923	50, 52, 57, 60, 65, 75	T12 Slimline Instant Start	F60, F64, F72, F84, F9	120	1 Black 70" 1 White 70" 1 Red 46" 1 Blue 46"	2	Encased & Potted	37.40
91-0039-00	LO-13-22	2X463	13, 14, 15, 20	T8, T12 Preheat Straight"	F13, F14, F15, F20	120	1 Black 6" 1 White 6" 1 Yellow 11" 1 Black 11" 1 Red 11" 1 White 11"	1	Encased & Potted	16.40
91-0040-00	———	———	25	T12 Preheat Straight	F25	120	1 Black 14" 1 White 14" 1 White 22" 1 Red 22 " 1 Yellow 22" 1 Blue 22"	1	Encased & Potted	20.50
91-0056-00	SM-151-S-TP	———	25, 38, 40	T6 & T8 Slimline Instant Start	F42, F64, F72	120	1 White 68" 1 Blue 44" 1 Black/White 10"	1	Encased & Potted	55.50
91-0118-00	LC-14-20-C	2X463	14,15, 18,19, 20	T8,T12 Preheat Straight	F14,F15, F18, F19, F20	120	1 Black 17" 1 Black 14"	1	Clamped Core	3.75
91-0120-00	L-140F-TP	2W769	28, 30, 32, 40	T8 & T12 Straight Preheat, T9 Circline Preheat, T4 & T6 2D Square Shaped Preheat	F28, F30, F40, FC12, FC16	120	1 Black/White 14" 1 White 43" 1 Blue 27"	1	Encased & Potted	12.05
91-0121-00	RL-140-TP	5X788	30, 32, 40,	T12 Straight Rapid Start, T9 Circline Rapid Start	F30, F40, FC12, FC16	120	1 Black/White 10" 1 White 36" 1 Blue 3" 1Red 25"	1	Encased & Potted	13.20
91-0122-00	LX-140F-TP	6V840	30, 32, 40,	T8 & T12 Straight Preheat, T9 Circline Preheat, T4 & T6 2D Square Shaped Preheat	F28, F30, F40, FC 12, FC16	120	1 Black/White 10" 1 Red/White 25" 1 White 25" 1 Blue/White 25" 1 Blue 25"	1	Encased & Potted	21.75
91-0124-00	LPL—5-9	6V836	4, 6, 8	T5 Straight Preheat	F4, F6, F8	120	2 Black 9"	1	Encased & Potted	4.90
91-0125-00	RLQ-120-TP	5X791	13, 14, 15, 20	T8, T12 Preheat Straight	F13, F14, F15, F20	120	1 White 11" 1 Black/White 11" 1 Blue 11" 2 Red 10"	1	Encased & Potted	13.40
91-0126-00	RL-2SP20-TP	3X964	13, 15, 20	T8 , T12 Preheat Straight	F13, F15, F20	120	1 Black 15" 1 White 15" 2 Blue 15" 2 Red 15" 2 Yellow 18"	2	Encased & Potted	24.10
91-0127-00	R-2P32-TP	6V613	32	T8 Rapid Start Straight & U-Shaped	F32	120	1 Black 20" 1 White 20" 2 Blue 24" 2 Red 24" 2 Yellow 36"	2	Encased & Potted	32.55
91-0128-00	R-2S40-1-TP	6X922	34, 40	T10 & T12 Straight Rapid Start, T12 U-Shaped Rapid Start	F40	120	1 Black 20" 1 White 20" 2 Blue 25" 2 Red 25" 2 Yellow 35"	2	Encased & Potted	24.10
91-0130-00	V-2E75-S-2-TP	5X420	50, 52, 57, 65, 75	T12 Slimline Instant Start	F60, F64, F72, F84, F96	277	1 Black 19" 1 White 70" 1 Blue 46" 1 Red 46" 2 Yellow 70"	2	Encased & Potted	39.85
91-0131-00	R-2S110-TP	3X961	85, 95, 100	T12 High Output Rapid Start	F72, F96	120	1 Black 22" 1 White 22" 2 Blue 46" 2 Red 46" 2 Yellow 70"	2	Encased & Potted	68.70

BALLASTS (CONTINUED)

- Top quality ballasts made durable for extra long life
- Low noise
- American made

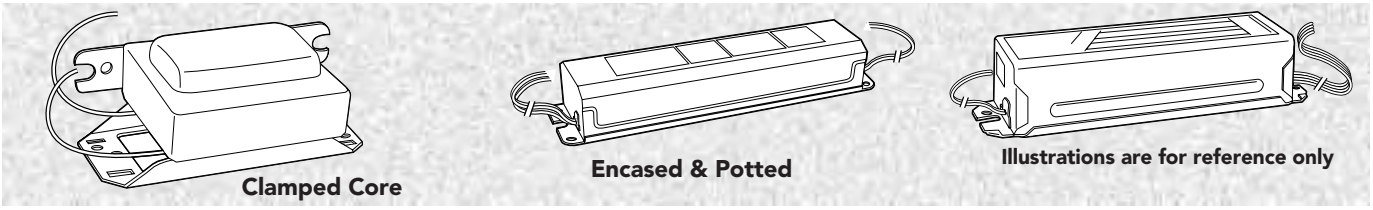

Part Number	Same As Advance #	Same As GE#	Watts	Lamp Type	Used On	Volts	Leads Color/Length	No. Lamps	Ballast Type	Price per ea.
91-0904-00	———	———	13	T8 Preheat Straight	F13	120	1 Black 7" 1 Black 15"	1	Clamped Core	6.70
91-0905-00	LS-113-TP	———	13	T5 Preheat Straight	F13	120	1 White 15" 1 Blue 15" 1 Black/White 15"	1	Encased & Potted	16.50
91-1226-00	LC-4-9-C	6V834	4, 6, 8	T5 Straight Preheat	F4, F6, F8	120	2 Black 10"	1	Clamped Core	4.05
91-1228-00	LC-14-20-C	2X463	14,15, 18,19, 20	T8,T12 Preheat Straight	F14,F15, F18, F19, F20	120	1 Black 17" 1 Black 14"	1	Clamped Core	4.05
91-1229-00	LC-25	6V833	25	T12 Preheat Straight	F25	120	1 Black 7" 1 Black 22"	1	Clamped Core	5.40
91-1230-00	———	———	30, 40	T12 Preheat Straight	F30, F40,	120	1 Black 26" 1 Blue 26" 1 White 26"	1	Encased & Potted	12.95
91-1233-00	RC-2SP40-TP		30, 40,	T10 & T12 Straight Rapid Start, T12 U-Shaped Rapid Start"	F30, F40,	120	1 Black 18" 1 White 18" 2 Blue 24" 2 Red 24" 2 Yellow 36"	2	Encased & Potted	25.35
91-1234-00	SM-2E40-S-TP	———	34, 36 40	T12 & T17 Straight Instant Start & Slimline	F36, F40, F48	120	1 Black 41" 1 White 41" 1 Blue 23" 1 Red 23"	2	Encased & Potted	31.40
91-1240-00	R-140-1-TP	———	34, 40	T10 & T12 Straight Rapid Start	F40	120	1 White 22 " 2 Blue 35" 2 Red 23" 1 Black/White 22"	1	Encased & Potted	48.15

STARTERS

- Deluxe starters are UL/CSA listed
- Deluxe starters include ceramic condenser which greatly increases the life of the starter
- All starters are pre-tested to insure top quality
- 25 per box
- Minimum order of 5

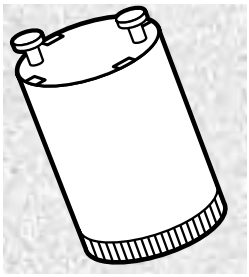

Part Number	Watts	Price per ea.	L/5	L/25
91-2000-00	14, 15, 20	FS-2 Deluxe w/condenser	.42	.37
91-2001-00	30, 40	FS-4 Deluxe w/condenser	.42	.37
91-2002-00	4, 6, 8	FS-5 Deluxe w/condenser	.57	.50
91-2003-00	18, 22, 25	FS-25 Deluxe w/condenser	.47	.42
91-2004-00	14, 15, 20	FS-2 Economy w/o condenser	.38	.32
91-2005-00	30, 40	FS-4 Economy w/o condenser	.38	.32
91-2006-00	4, 6, 8	FS-5 Economy w/o condenser	.51	.46
91-2007-00	18, 22, 25	FS-25 Economy w/o condenser	.43	.38
91-0949-10	4-65	S-2 Philips Starter w/o condenser	1.30	1.15
91-0949-00	4-22	S-10 Philips Strater w/o condenser	1.30	1.15

FS-U UNIVERSAL STARTER

NEW

- Eliminates the need to carry 3 different starters
- Replaces the FS2, FS4, and FS5 starters
- 4-30 Watts; 120V
- UL listed
- With condenser
- 25 per box
- Minimum order of 5

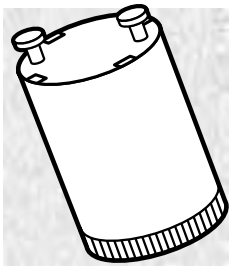

Part Number		Price per ea.	L/5	L/25
91-0178-00	FS-U Universal Starter	.43	.39	

HAVE IT YOUR WAY!
CHECK IT OUT!
Place orders when you want to - anytime!
No more phone tag,
Leisurely view past purchases,
Easily duplicate past orders,
e-mail notifications of shipments
NEW EASY-TO-USE SHOPPING CART SYSTEM AVAILABLE ON-LINE 24 HOURS A DAY
JUST GO TO OUR WEB SITE AND LOGIN
happcontrols.com

FLUORESCENT SOCKET FOR MEDIUM BI-PIN LAMPS

- For T-8 and T-12 lamps
- 600 Volts, 660 Watts

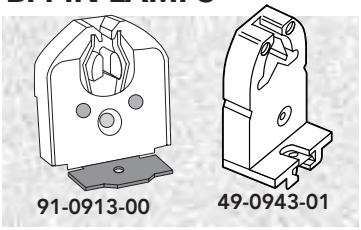

Part Number		Price per ea.	L/24
91-0913-00	Low Profile Design without leads	2.85	2.50
49-0943-01	High Profile Design without leads	.45	.38

SOCKET FOR FLUORESCENT STARTER

- Rating: 250 Volts, 660 Watts
- 9" 18 AWG lead wires
- UL Listed

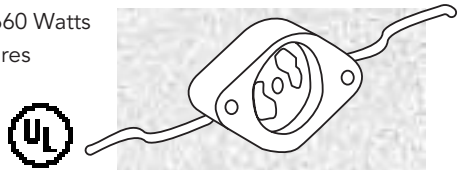

Part Number		Price per ea.	L/10
91-0038-00	Socket for Fluorescent Starter	1.30	1.15

MINI-LAMP FOR CASINO SIGNS

- Used in progressive signs above slot machines
- 2-wire base, T 1.5 (Tivoli style)
- 28 volts, .04 amps

Part Number		Price per ea.
91-0185-00	28V Clear Bulb With Base	.49
91-0140-00	28V Clear Bulb Only	.37
91-0185-0B	28V Blue Bulb With Base	.56
91-0185-0R	28V Red Bulb With Base	.56

MINI SPOTLIGHT REFLECTOR ASSEMBLY

NEW

- Small compact size allows spotlight to be added to almost any application
- 1-3/16" spotlight
- Utilizes wedge base, T-3-1/4 bulb
- .110 lamp terminals
- Metal mounting bracket

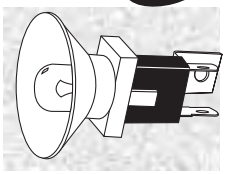

Part Number		Price per ea.	L/25
91-1225-00	Mini Spotlight Reflector Assembly, 6v 555 bulb	1.80	1.75
91-1225-10	Mini Spotlight Reflector Assembly, 12v 161 bulb	1.80	1.75

REPLACEMENT BULB FOR SPORTS ARENA

- For use on American Sammy Sports Arena Game
- Keep your games earning potential to it's maximum by replacing those burnt out bulbs
- Each machine contains 64 bulbs (8 Red, 56 Clear)
- Available in both Clear and Red bulbs
- 24 Volts, 5 Watts

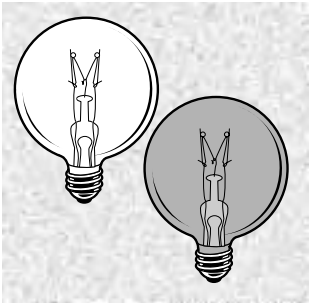

Part Number		Price per ea.	L/25
91-0051-00	Sports Arena Replacement Bulb, Clear	1.90	1.80
91-0050-00	Sports Arena Replacement Bulb, Red	2.05	1.95
91-0214-00	Super Sports Arena Replacement Bulb, Clear	.96	.96
91-0213-00	Super Sports Arena Replacement Bulb, Red	1.10	1.10

FLUORESCENT SOCKETS FOR STANDARD LAMPS

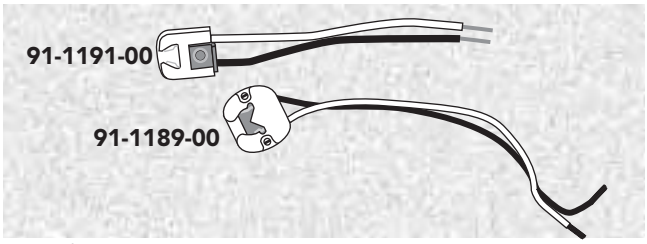

Part Number	Lamp Type	Watts	Price per ea.	L/24
91-1191-00	T5	4, 6, 8, 11, 13	1.30	1.15
91-1189-00	T8 & T12	14, 15, 16, 18, 20, 22, 25, 30, 40	1.30	1.15

LED LIGHT BOARD FOR VALIDATOR BEZEL

- For Bally 5500 series upright slot machines
- Stop replacing burnt out incandescent lights!
- LEDs last an average of 100,000 hours, saving you time and money
- LEDs are the longest lasting, most maintenance-free lighting source available
- Guaranteed for 3 years!
- Kit includes LED board and harness; bezel not included

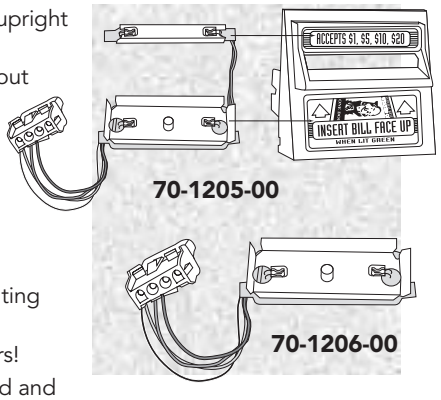

Part Number		Price per ea.	L/100
70-1205-00	For Upright Slot Machine	48.15	42.20
70-1206-00	For Slant Top Slot Machine	45.75	39.80
70-0076-00	For Drop-In Bar Games	45.75	39.80

ROPE LIGHTING

NEW

- UL approved
- Use indoor or outdoor
- Sold with Red or Clear tubing
- 1/2" diameter, 110V & 220V
- Sold per foot, minimum 10 feet
- Can be cut with scissors
- 20,000 hours
- Controller required for operation (91-0084-00
- Additional colors available upon request

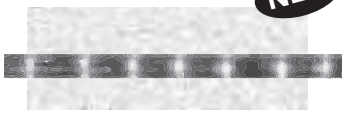

Part Number		Price per ea.
91-0083-00	Rope Lighting – Red Tubing	4.00
91-0110-00	Rope Lighting – Clear Tubing	4.00
91-0084-00	Small Controller for Rope Lighting	34.95
91-0113-00	2 foot Y Connector for Rope Light	12.05
91-0114-00	Half Splice Connector, Male for Rope Lighting from Light to Controller	6.10

© HAPP CONTROLS

T 1-3/4 AND T 3-1/4 WEDGE BASE LED

- Save time and money by replacing your lamps with LEDs
- LEDs are maintenance free, lasting an average of 100,000 hours
- LEDs can reduce power consumption up to 80%
- Great for use on illuminated pushbuttons including poker / VLT pushbuttons
- Replace standard T 1-3/4 and T 3-1/4 wedge base lamps
- T 1-3/4 will also fit T 1-1/2 bases
- Designed to be drop-in replacements
- Direct replacements for 73, 86, 161, 194, 555 bulbs
- LEDs are equipped with a resistor

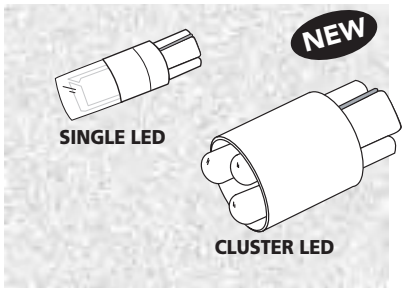

Part Number	Color	Base	LED Type	Volts	Lamp	Price per ea.	L/100
91-5WB-61W	White	T 1-3/4	Single (1)	6 vdc	#86	3.70	3.05
91-5WB-51Y	Yellow	T 1-3/4	Single (1)	6 vdc	#86	3.70	3.05
91-5WB-51R	Red	T 1-3/4	Single (1)	6 vdc	#86	3.70	3.05
91-5WB-51G	Green	T 1-3/4	Single (1)	6 vdc	#86	3.70	3.05
91-5WB-51B	Blue	T 1-3/4	Single (1)	6 vdc	#86	3.70	3.05
91-5WB-121W	White	T 1-3/4	Single (1)	12 vdc	#73	3.70	3.05
91-5WB-121Y	Yellow	T 1-3/4	Single (1)	12 vdc	#73	3.70	3.05
91-5WB-121R	Red	T 1-3/4	Single (1)	12 vdc	#73	3.70	3.05
91-5WB-121G	Green	T 1-3/4	Single (1)	12 vdc	#73	3.70	3.05
91-5WB-121B	Blue	T 1-3/4	Single (1)	12 vdc	#73	3.70	3.05
91-10WB-53W	White	T 3-1/4	Cluster (3)	6 vdc	#259, #555	4.60	4.05
91-10WB-53Y	Yellow	T 3-1/4	Cluster (3)	6 vdc	#259, #555	4.60	4.05
91-10WB-53R	Red	T 3-1/4	Cluster (3)	6 vdc	#259, #555	4.60	4.05
91-10WB-53G	Green	T 3-1/4	Cluster (3)	6 vdc	#259, #555	4.60	4.05
91-10WB-53B	Blue	T 3-1/4	Cluster (3)	6 vdc	#259, #555	4.60	4.05
91-10WB-123W	White	T 3-1/4	Cluster (3)	12 vdc	#161, #194	4.60	4.05
91-10WB-123Y	Yellow	T 3-1/4	Cluster (3)	12 vdc	#161, #194	4.60	4.05
91-10WB-123R	Red	T 3-1/4	Cluster (3)	12 vdc	#161, #194	4.60	4.05
91-10WB-123G	Green	T 3-1/4	Cluster (3)	12 vdc	#161, #194	4.60	4.05
91-10WB-123B	Blue	T 3-1/4	Cluster (3)	12 vdc	#161, #194	4.60	4.05

T 3-1/4 WEDGE BASE LED

- Replaces standard T-3-1/4 wedge base incandescent lamps with long life, low power LEDs
- Designed to be drop in replacements for all the most popular miniature lamps
- Direct replacement for 161, 194, 259 bulbs
- LEDs have resistor on board
- Used for replacement for Illuminated pushbuttons

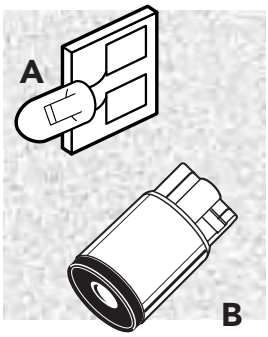

Part Number	Color	Voltage	Ref.	Lamp	Price per ea.	L/100
91-1157-00	Red	6vdc	A	#259	3.30	3.00
91-0690-00	White	6vdc	B	#259	14.55	14.00
91-1158-00	Red	12vdc	A	#161, #194	3.30	3.00
91-0689-00	White	12vdc	B	#161, #194	14.55	14.00

LED INSERTION TOOL

NEW

- Handy tool helps avoid damage to LED resistor and static electricity
- Also prevents blisters when inserting many LEDs
- For T 1-3/4 base LEDs

Part Number		Price per ea.
92-1396-00	LED Insertion Tool	5.05

ECONOMY MINI LAMPS

- These lamps are the highest rated economy mini lamps in the industry
- Sold in convenient boxes of 10
- Preferred by many O.E.M.'s, (Original Equipment Manufacturers)
- Min order 10

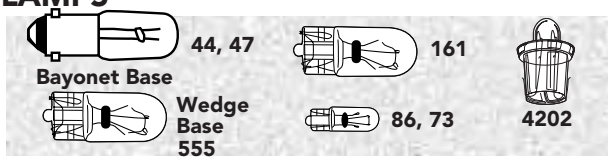

Part Number	Lamp No.	Volts	Base	Price per ea. L/10	L/100
91-0140-00	#E0209	28	2-Wire (T 1-1/2)	.37	.32
91-2019-10	#19	14.4	2 Prong (G 3-1/2)	1.30	1.15
91-0029-00	#E17	28	Wedge (T 1-1/2)	.79	.71
91-1119-10	#44	6.3	Bayonet (T 3-1/4)	.20	.18
91-1120-10	#47	6.3	Bayonet (T 3-1/4)	.20	.18
91-1121-00	#51	7.5	Bayonet (G 3-1/2)	.42	.36
91-0135-00	#55	7	Bayonet (G 4-1/2)	.31	.29
91-0138-00	#57	14	Bayonet (G 4-1/2)	.25	.23
91-2063-10	#63	7	Bayonet (G 6)	.30	.27
91-1123-10	#68	13.5	Bayonet (G 6)	.49	.47
91-1221-10	#73	14	Wedge (T 1-3/4)	.26	.23
91-0073-10E	#E73	14	Wedge (T 1-1/2)	.27	.24
91-0137-00	#74	14	Wedge (T 1-3/4)	.31	.29
91-1317-10	#85	28	Wedge (T 1-3/4)	.47	.45
91-1124-20	#86	6.3	Wedge (T 1-3/4)	.39	.36
91-1124-10	#E86	6.3	Wedge (T 1-1/2)	.39	.36
91-1129-10	#93	12	Bayonet (S 8)	.61	.48
91-0152-10	#152	28	Wedge (T 3-1/4)	.28	.26
91-0030-00	#158	14	Wedge (T 3-1/4)	.48	.43
91-1118-01	#159	6.3	Wedge (T 3-1/4)	.38	.32
91-1219-10	#161	14	Wedge (T 3-1/4)	.21	.20
91-1222-10	#193	14	Wedge (T 3-1/4)	.38	.34
91-1320-10	#194	14	Wedge (T 1-1/4)	.38	.30
91-0195-00	#256	14	Mini Bayonet Flasher (T 3-1/4)	.46	.41
91-0257-10	#257	14	Bayonet (Flasher) (G 4-1/2)	.45	.41
91-1118-10	#259	6.3	Wedge (T 3-1/4)	.32	.29
91-0759-00	#359	1.35	Mini-Screw (G 3-1/2)	.52	.47
91-0013-00	#367	10	S.C. Midget (T 1-3/4)	.67	.63
91-0032-00	#379	6.3	S.C. Midget (T 1-3/4)	.88	.79
91-0382-10	#382	14	S.C. Midget Flanged (T 3-1/4)	.47	.44
91-0393-00	#393	14	Miget Groove	1.15	.83
91-0659-10	#400	28V	Wedge (T 3-1/4)	.41	.36
91-1128-10	#447	6.3	Wedge (T 3-1/4)	.39	.32
91-2455-10	#455	6.5	Bayonet (Flasher) (G 4-1/2)	.36	.29
91-0033-00	#464	28	Wedge (T 3-1/4)	.46	.43
91-1321-10	#505	24	Wedge (T 3-1/4	.43	.36
91-1319-10	#555	6.3	Wedge (T 3-1/4) Clear	.21	.20
91-0555-0R	#555	6.3	Wedge (T 3-14) Red	.38	.36
91-0555-0B	#555	6.3	Wedge (T 3-14) Blue	.38	.36
91-0555-0A	#555	6.3	Wedge (T 3-14) Amber	.38	.36
91-0555-0G	#555	6.3	Wedge (T 3-14) Green	.38	.36
91-0585-10	#585	28	Wedge (T 3-1/4)	.48	.45

Part Number	Lamp No.	Volts	Base	Price per ea. L/10	L/100
91-2656-10	#656	28	Wedge (T 3-1/4)	.29	.25
91-1126-10	#657	28	Wedge (T 3-1/4)	.39	.34
91-1220-10	#658	14	Wedge (T 3-1/4)	.38	.30
91-0680-10	#680	5	2 Wire Terminal (T 1)	.38	.30
91-0193-00	#685	5	Midget Flange (T 1)	.51	.46
91-0034-00	#715	5	2-Wire (T 1)	.50	.43
91-2755-10	#755	6.3	Bayonet (T 3-1/4)	.43	.38
91-0136-00	#756	14.4	Bayonet (T 3-1/4)	.31	.29
91-2757-10	#757	28	Bayonet (T 3-1/4)	.48	.43
91-2904-10	#904	13.5	Wedge (T 5)	.38	.34
91-1135-10	#906	13	Wedge (T 5)	.51	.43
91-0912-10	#912	12.8	Wedge (T5)	.32	.29
91-0180-00	#921	12	Wedge	.64	.57
91-1073-10	#1073	12.8V	S.C. Bayonet (S 8)	1.60	1.60
91-0150-00	#1112	12	Wedge (T 3-1/4)	.20	.19
49-0069-00	#1156	12.8	S.C. Bayonet (S 8)	1.60	1.40
91-1251-10	#1251	28	S.C. Bayonet (G 6)	.61	.53
91-1683-10	#1683	28	S.C. Bayonet (S 8)	.84	.70
91-1813-10	#1813	14.4	Bayonet (T 3-1/4)	.30	.24
91-1815-10	#1815	14	Mini Bayonet (T 3-1/4)	.43	.38
91-1816-10	#1816	13	Mini Bayonet (T 3-1/4)	.30	.28
91-1819-10	#1819	28	Mini Bayonet (T 3-1/4)	.34	.30
91-1820-10	#1820	28	Bayonet (T 3-1/4)	.43	.38
91-1821-10	#1821	28	Mini Screw (T 3-1/4)	.34	.30
91-1829-10	#1829	28	Bayonet (T 3-1/4)	.45	.41
91-1847-10	#1847	6.3	Bayonet (T 3-1/4)	.30	.26
91-1873-10	#1873	28	Bayonet (T 3-1/4)	.43	.38
91-0052-00	#1888	7	Bayonet (T 3-1/4)	.38	.30
91-1891-10	#1891	14	Bayonet (T 3-1/4)	.43	.38
91-1892-10	#1892	14.4	Bayonet (T 3-1/4)	.30	.25
91-1893-10	#1893	14	Bayonet (T 3-1/4)	.38	.30
91-1895-10	#1895	14	Bayonet (G 4-1/2)	.24	.22
91-0196-00	#2176	24	2-Wire (T 1-3/4)	.26	.21
91-2182-10	#2182D	14	2 Wire Base (T 1-3/4)	.41	.31
91-0035-00	#2187	28	2-Wire (T 1-3/4)	.40	.36
91-0036-00	#4201	14	Neo/Base	1.50	1.40
91-0069-00	#4202	24	Neo/Base	1.20	1.15
91-0025-00	#7152	5	Bi-Pin w/leads (T 1)	1.15	.94
91-0004-00	#7374	28	Midget Bi-Pin (T 1-3/4	.69	.63
91-0586-00	#10969	12	Wedge (T 3-1/4)	.39	.35

BULK MINI LAMPS

- These lamps are the highest rated economy mini lamps in the industry
- Packaged in bulk bags or boxes
- Preferred by many O.E.M.'s (Original Equipment Manufacturers)
- **Bulk packaging may not be broken**

Part Number	Lamp Number	Volts	Base	Pkg.	Price per ea.
91-2044-00	#44	6.3	Bayonet (T 3-1/4)	100/box	.16
91-1120-00	#47	6.3	Bayonet (T 3-1/4)	100/box	.16
91-1123-00	#68	13.5	Bayonet (G 6)	100/box	.23
91-1221-00	#73	14	Wedge (T 1-3/4)	100/box	.21
91-1317-00	#85	28	Wedge (T 1-3/4)	100/box	.41
91-1124-00	#86	6.3	Wedge (T 1-3/4)	100/box	.25
91-1129-00	#93	12	Bayonet (S 8)	100/box	.40
91-1219-00	#161	14	Wedge (T 3-1/4)	500/bag	.18
91-1222-00	#193	14	Wedge (T 3-1/4)	500/bag	.23

Part Number	Lamp Number	Volts	Base	Pkg	Price per ea.
91-1320-00	#194	14	Wedge (T 1-1/4)	500/bag	.26
91-1118-00	#259	6.3	Wedge (T 3-1/4)	500/bag	.26
91-1128-00	#447	6.3	Wedge (T 3-1/4)	500/bag	.28
91-1319-00	#555	6.3	Wedge (T 3-1/4)	500/bag	.19
91-1318-00	#656	28	Wedge (T 3-1/4)	500/bag	.53
91-1126-00	#657	28	Wedge (T 3-1/4)	100/bag	.39
91-1220-00	#658	14	Wedge (T 3-1/4)	500/bag	.38
91-1135-00	#906	13	Wedge (T 5)	100/bag	.51

© HAPP CONTROLS

DELUXE MINI LAMPS

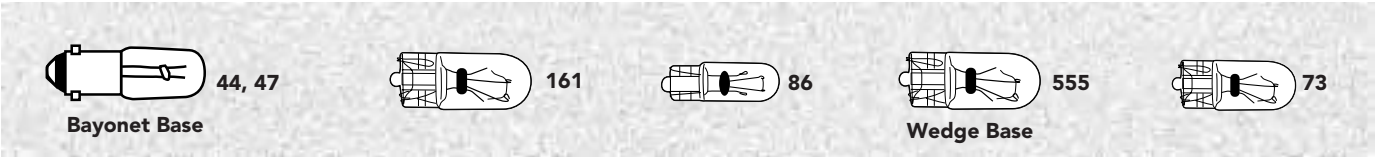

- Brand name GE or Sylvania mini lamps
- These high quality lamps out perform all import type mini lamps
- Sold in convenient boxes of 10

Part Number	Lamp Number	Volts	Base	Price per ea. L/10	L/100
91-0037-00	#37	14	Wedge (T 1-3/4)	.36	.30
91-0044-00	#44	6.3	Bayonet (T 3-1/4)	.30	.27
91-0047-00	#47	6.3	Bayonet (T 3-1/4)	.30	.27
91-0053-00	#53	14.4	S.C. Bayonet (G 3-1/2)	.52	.47
91-1122-00	#55	7	Bayonet (G 4-1/2)	.87	.83
91-0057-00	#57	14	Bayonet (G 4-1/2)	.53	.48
91-0067-00	#67	13.5	S.C. Bayonet (G 6)	.72	.67
91-0073-00	#73	14	Wedge (T 1-3/4)	.32	.29
91-0074-00	#74	14	Wedge (T 1-3/4)	.59	.52
91-0086-00	#86	6.3	Wedge (T 1-3/4)	.48	.45
91-0089-00	#89	13	S.C. Bayonet (G 6)	.50	.47
91-0090-00	#90	12	Bayonet (G 6)	.72	.66
91-0161-00	#161	14	Wedge (T 3-1/4)	.41	.39
91-0194-00	#194	14	Wedge (T 1-1/4)	.30	.27
91-1125-00	#222	2.25	Screw (TL 3)	.86	.79
91-0313-10	#313	28V	Bayonet (T 3-1/4)	1.35	1.30

Part Number	Lamp Number	Volts	Base	Price per ea. L/10	L/100
91-2455-10	#455	6.5V	Bayonet (Flasher) (G 4-1/2)	.36	.29
91-0555-00	#555	6.3	Wedge (T 3-1/4)	.31	.28
91-0656-00	#656	28	Wedge (T 3-1/4)	.84	.77
91-0658-00	#658	14	Wedge (T 3-1/4)	.79	.79
91-0755-00	#755	6.3	Bayonet (T 3-1/4)	.80	.70
91-0756-00	#756	14.4	Bayonet (T 3-1/4)	1.45	1.20
91-0906-00	#906	13	Wedge (T 5)	.43	.41
91-0912-00	#912	12.8	Wedge (T 5)	.95	.90
91-1813-00	#1813	14.4	S.C. Bayonet (T 3-1/4)	1.20	1.15
91-1819-00	#1819	28V	Bayonet (T 3-1/4)	.65	.63
91-1847-00	#1847	6.3	Bayonet (T 3-1/4)	.71	.66
91-1891-00	#1891	14.0V	Bayonet (T 3-1/4)	.63	.56
91-1892-00	#1892	14.4	Bayonet (T 3-1/4)	.52	.43
91-1895-00	#1895	14	Bayonet (G 4-1/2)	1.15	.93

WEDGE BASE SOCKETS FOR MINI LAMPS

- Push Twist Type

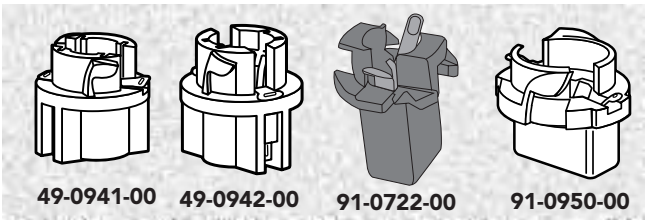

Part Number		Price per ea.
49-0941-00	T 1-1/2 Wedge Socket	1.05
49-0942-00	T 1-3/4 Wedge Socket (For E86 only)	1.00
91-0722-00	T 1-3/4 Wedge Socket (For all Except E86)	.47
91-0950-00	T 3-1/4 Wedge Socket	.39

SOCKET FOR MINI LAMPS

- Sockets for #44, 47, 51 & 1893 Mini Lamps
- Minimum order 10 pcs.

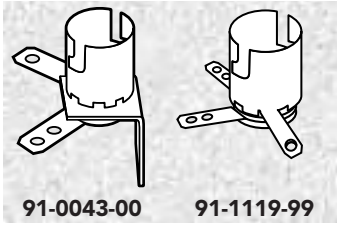

Part Number		Price per ea. L/10	L/100
91-0043-00	Socket w/90° Right Angle Bracket	.90	.83
91-1119-99	Socket for Mini Bayonet	.90	.83

HAPP CONTROLS LOCK DEPARTMENT

Happ Controls now has it's own lock assembly department. We offer fast turn around on 7-pin tumbler locks. Most custom lock orders can be shipped within 48 hours. Happ locks can be keyed to your existing 7-pin tumbler key, if we receive a sample key with your order. Our 7-pin tumbler locks offer high security at a reasonable price.

For your added protection, any code issued by Happ Controls can be restricted in our computer system exclusively to your company.

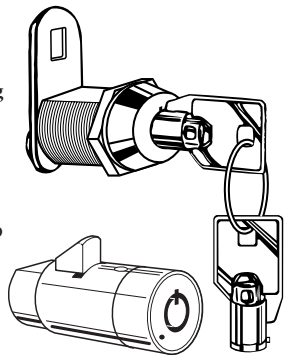

INCANDESCENT LAMPS

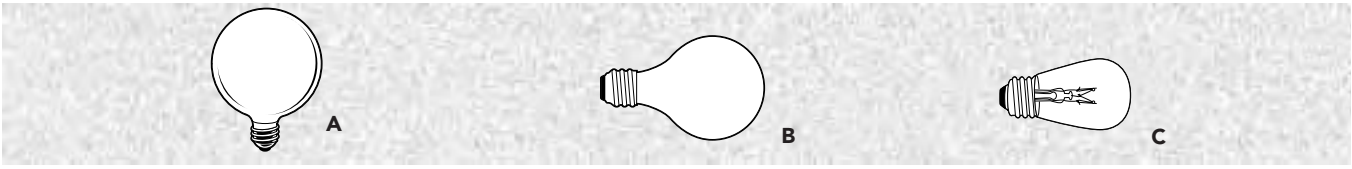

- Various types of incandescent lamps, from typical lamps used everyday in your home, to the more rugged and durable appliance and rough service lamps
- American made unless otherwise noted

Ref	Part Number	Lamp Type	Watts	Volts	Color	Price per ea.	Price per ea. L/1 Case
A	91-0917-00	Pearl White Globe	25	120	White	1.90 ea.	1.75 - L/20
B	91-0901-00	15A	15	120	Frost	.91 - L/2	.71 - L/24
A	91-1173-00	25A19	25	120	Frost	.91 - L/4	.71 - L/120
B	91-1167-00	25A Rough Service	25	120	Frost	1.65 - L/6	1.45 - L/120
B	91-0919-00	40A	40	120	Frost	.91 - L/4	.89 - L/48
B	91-1165-00	40A15 Appliance	40	120	Frost	.95 - L/6	.95 - L/120
B	91-3060-00	60A	60	120	Frost	1.05 - L/2	.70 - L/24
B	91-1166-00	60A/Rough Service	60	120	Frost	1.85 - L/6	1.75 - L/120
B	91-5001-00	75A	75	120	Frost	1.30 - L/6	.95 - L/24
B	91-0075-00	75A Rough Service	75	120	Frost	2.70 - L/4	2.70 - L/12
B	91-3100-00	100A	100	120	Frost	2.05 - L/2	1.95 - L/24
C	91-1161-10	Color Display Lamp*[1]	11	130	Red	1.80 ea.	1.65 - L/12
C	91-1161-12	Color Display Lamp*[1]	11	130	Blue	1.80 ea.	1.65 - L/12
C	91-1161-13	Color Display Lamp*[1]	11	130	Green	1.80 ea.	1.65 - L/12
C	91-1161-15	Color Display Lamp*[1]	11	130	Yellow	1.80 ea.	1.65 - L/12
C	91-1161-17	Color Display Lamp*[1]	11	130	Orange	1.80 ea.	1.65 - L/12
C	91-1161-18	Color Display Lamp*[1]	11	130	Clear	1.80 ea.	1.65 - L/12

*Not made in the U.S.A.
[1] Replacement for AMI/Rowe Jukeboxes

SPECIALTY SERVICE LAMPS

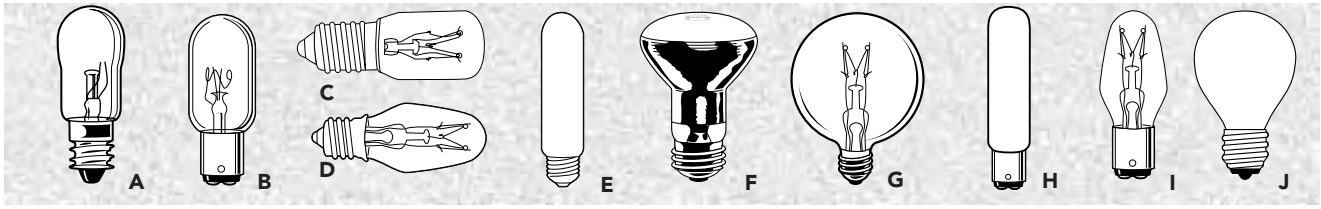

- Various sizes and styles for different applications
- American made * unless otherwise noted

Ref	Part Number	Lamp Type	Watts	Volts	Color	Price per ea.	Price per ea. L/1 Case
A	91-0108-00	6S6, Candelabra	6	32	Clear	.48 - L/10	.43 - L/50
A	91-1193-00	6S6, Candelabra	6	120	Clear	.46 - L/10	.41 - L/50
B	91-1174-00	6S6DC	6	120	Clear	1.65 - L/10	1.45 - L/120
D	91-27C7-00	7C7, *Economy	7	120	Clear	.70 - L/10	.59 - L/100
D	91-07C7-00	7C7, Deluxe	7	120	Clear	.95 - L/12	.84 - L/120
I	91-10C7-00	10C7, DC	10	120	Clear	1.80 - L/10	1.55 - L/100
E	91-0168-00	20T6-1/2 IF	20	120	Frost	8.55 ea.	7.85 - L/60
H	91-0064-00	25T6-1/2DC	25	120	Clear	4.60 ea.	3.50 - L/60
E	91-0049-10	25TT6-1/2	25	130	Frost	4.95 ea.	4.55 - L/60
B	91-0903-00	25T8 DC, Bayonet	25	120	Clear	1.90 - L/10	1.55 - L/60
E	91-2510-00	25T10	25	120	Frost	1.90 ea.	1.65 - L/10
E	91-4010-00	40T10	40	120	Frost	2.00 ea.	1.80 - L/10
F	91-0907-00	50 R20 Flood	50	125	Clear	10.95 ea.	9.70 - L/60
F	91-5030-00	50 R30 Flood	50	120	Clear	7.80 ea.	5.90 - L/24
F	91-1182-00	65BR30 Flood	65	120	Frost	4.30 ea.	3.75 - L/24
F	91-1182-10	65BR30 Flood	65	120	Red	4.25 ea.	3.85 - L/24
F	91-1192-00	75 R30 Spot	75	120	Clear	6.60 ea.	6.05 - L/24
F	91-7530-00	75 R30 Flood	75	120	Frost	4.90 ea.	4.45 - L/24
F	91-0078-00	PAR 38 FLood	120	120	Frost	8.50 ea.	7.95 - L/30
C	91-1186-00	Crane Bulb, Candelabra	10	48 - 60	Clear	1.55 ea.	1.30 - L/50
C	91-1187-00	Crane Bulb, Candelabra	10	130	Clear	.91 ea.	.79 - L/50
A	91-1193-00	6S6 Screw Base	6	120	Clear	.46 - L/10	.41 - L/50
B	91-0903-00	25T8DC	25	120	Clear	1.90 - L/10	1.55 - L/60
G	91-0051-00	Mini Globe	5	24	Clear	1.90 ea.	1.80 - L/25
G	91-0050-00	Mini Globe	5	24	Red	2.05 ea.	1.95 - L/25
G	91-0177-00	Mini Globe	7	120	Clear	.42 ea.	.39 - L/25
G	91-0060-00	Mini Globe	10	120	Clear	2.00 ea.	1.90 L/25
G	91-0061-00	Mini Globe	10	120	Red	2.10 ea.	2.00 - L/25
J	91-0927-00	40SIIN	40	120	Clear	5.55 ea.	5.20 - L/24

* Not made in USA

© HAPP CONTROLS

AGC FUSES – FAST BLOW TYPE

- 1/4" diameter x 1-1/4" length
- Various amperages
- Fast acting to protect equipment
- Made in the U.S.A.
- Packaged in boxes of 5
- Minimum order 10

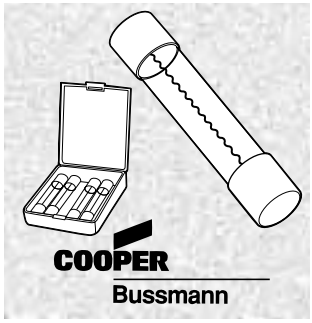

1/4" Dia. x 1-1/4" L

Part Number	Amps	Volts	Price per fuse L/10	L/50	L/100
49-1232-00	1/10	250	.71	.66	.61
49-0785-00	1/8	250	.71	.66	.61
49-0273-00	3/16	250	.71	.66	.61
49-0349-00	1/4	250	.61	.53	.48
49-0808-00	3/8	250	.36	.31	.29
49-0621-00	1/2	250	.36	.31	.29
49-0622-00	6/10	250	.48	.43	.38
49-0547-00	3/4	250	.36	.31	.29
49-0623-00	8/10	250	.36	.31	.29
49-0118-00	1	250	.36	.31	.29
49-0624-00	1-1/4	250	.36	.31	.29
49-0625-00	1-1/2	250	.36	.31	.29
49-0119-00	2	250	.36	.31	.29
49-0627-00	2-1/2	250	.36	.31	.29
49-0024-00	3	250	.36	.31	.29
49-0932-00	3-1/2	250	.36	.31	.29
49-0615-00	4	250	.36	.31	.29
49-0120-00	5	250	.36	.31	.29
49-0296-00	6	250	.36	.31	.29
49-0613-00	7	250	.36	.31	.29
49-0566-00	8	250	.36	.31	.29
49-0560-00	10	250	.36	.31	.29
49-0277-00	15	32	.36	.31	.29
49-0278-00	20	32	.36	.31	.29
49-0279-00	25	32	.36	.31	.29
49-0280-00	30	32	.36	.31	.29

GMA FUSES – FAST BLOW TYPE

- 5 x 20 mm
- Various amperages
- Commonly used within pinball machines
- Fast acting to protect electronic equipment
- Made in the U.S.A.
- Packaged in boxes of 5
- Minimum order 10

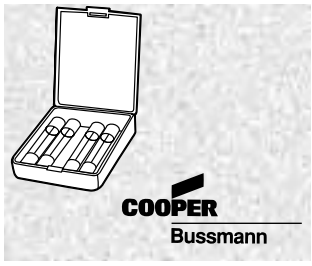

Part Number	Amps	Volts	Price per fuse L/10	L/50	L/100
49-0593-00	300mA	250	1.30	1.15	.95
49-1233-00	500mA	250	1.30	1.15	.95
49-0498-00	1	250	1.30	1.15	.95
49-1271-00	1.25*	250	1.30	1.15	.95
49-0669-00	1.5	250	1.30	1.15	.95
49-1335-00	1.5*	250	1.30	1.15	.95
49-0497-00	2	250	1.30	1.15	.95
49-1333-00	2*	250	1.30	1.15	.95
49-0670-00	2.5	250	1.30	1.15	.95
49-0496-00	3	250	1.30	1.15	.95
49-1334-00	3*	250	1.30	1.15	.95
49-0626-00	3.15	125	1.30	1.15	.95
49-0589-00	4	125	1.30	1.15	.95
49-0495-00	5	125	1.30	1.15	.95
49-0652-00	6	125	1.30	1.15	.95
49-0786-00	7	125	1.30	1.15	.95
49-0590-00	8	125	1.30	1.15	.95
49-0290-00	10	125	1.30	1.15	.95
49-0788-00	15	125	1.30	1.15	.95

*With Leads

MDL FUSES – SLOW BLOW TYPE

- 1/4"diameter x 1-1/4" length
- Various amperages
- Dual-element, slow blowing type to prevent needless fuse blows
- Made in the U.S.A.
- Packaged in boxes of 5
- Minimum order 10

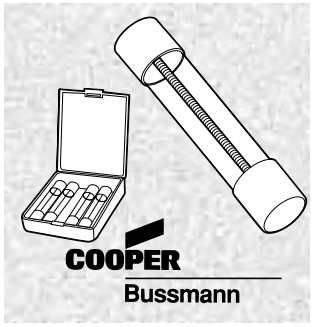

1/4" Dia. x 1-1/4" L

Part Number	Amps	Volts	Price per fuse L/10	L/50	L/100
49-0610-00	1/10	250	.71	.66	.61
49-0608-00	1/8	250	.71	.66	.61
49-0609-00	3/16	250	.71	.66	.61
49-0607-00	2/10	250	.71	.66	.61
49-0551-00	1/4	250	.44	.40	.38
49-0606-00	3/10	250	.83	.79	.74
49-0494-00	3/8	250	.44	.40	.38
49-0605-00	4/10	250	.44	.40	.38
49-0553-00	1/2	250	.44	.40	.38
49-0604-00	6/10	250	.44	.40	.38
49-0603-00	7/10	250	.44	.40	.38
49-0552-00	3/4	250	.44	.40	.38
49-0602-00	8/10	250	.44	.40	.38
49-0111-00	1	250	.44	.40	.38
49-0599-00	1-1/4	250	.44	.40	.38
49-0564-00	1-1/2	250	.44	.40	.38
49-0598-00	1-6/10	250	.44	.40	.38
49-0112-00	2	250	.44	.40	.38
49-0113-00	2-1/2	250	.44	.40	.38
49-0597-00	2-8/10	250	.44	.40	.38
49-0030-00	3	250	.44	.40	.38
49-0579-00	3-2/10	250	.44	.40	.38
49-0933-00	3-1/2	250	.44	.40	.38
49-0114-00	4	250	.44	.40	.38
49-0025-00	5	250	.44	.40	.38
49-0286-00	6	250	.44	.40	.38
49-0580-00	6-1/4	250	.44	.40	.38
49-0115-00	7	250	.44	.40	.38
49-0596-00	7-1/2	250	.44	.40	.38
49-0116-00	8	250	.44	.40	.38
49-0117-00	10	32	.44	.40	.38
49-0595-00	12	32	.44	.40	.38
49-0592-00	15	32	.44	.40	.38
49-0591-00	20	32	.44	.40	.38
49-0594-00	25	32	.44	.40	.38
49-0281-00	30	32	.44	.40	.38

GMQ FUSES – SLOW BLOW TYPE

- Various amperages
- Size rejecting, only allows fuse to be used within proper fuseholder
- Made in the U.S.A.
- Packaged in boxes of 5
- Minimum order 10

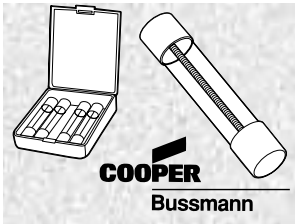

Part Number	Amps	Volts	Price per 5	Price per 10
49-0640-00	1	300	5.20	4.90
49-0641-00	3-2/10	300	4.80	4.30
49-0642-00	6-1/4	300	5.20	4.90

GMC, GMD FUSES

- 5 x 20 mm
- GMC- Medium Blow Type
- GMD- Slow Blow Type
- Various amperages
- Commonly used within pinball machines
- Dual-element, slow blowing type to prevent needless fuse blows
- Made in the U.S.A.
- Packaged in boxes of 5
- Minimum order 10

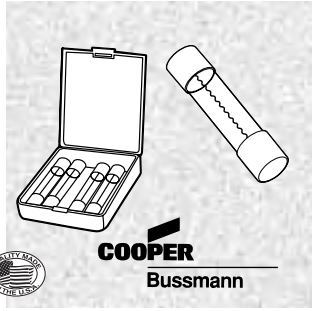

Part Number	Type	Amps	Volts	Price per fuse L/10	L/50	L/100
49-0838-00	GMC	63mA	250	.43	.41	.39
49-0839-00	GMC	250mA	250	.43	.41	.39
49-0837-00	GMC	2.5	250	.43	.41	.39
80-0016-01	GMC	3	250	1.20	1.15	1.10
49-0284-00	GMC	3.15	250	.95	.91	.86
49-0836-00	GMC	4	125	.43	.41	.39
49-0835-00	GMC	5	125	.43	.41	.39
49-0619-00	GMC	6.3	125	.43	.41	.39
49-0620-00	GMC	10	125	.43	.41	.39
49-0614-00	GMD	25mA	250	1.65	1.45	1.30
49-5062-00	GMD	1.6	250	1.55	1.35	1.20
49-0616-00	GMD	2	250	1.30	1.15	1.00
49-0617-00	GMD	2.5	250	1.30	1.15	1.00
49-0618-00	GMD	4	250	1.30	1.15	1.00

FUSE RACK

- Free standing durable yellow plastic display
- Holds 102 packages of 5 fuses (510 Fuses total)
- Fuses sold separately

COOPER Bussmann

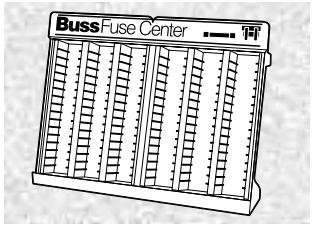

Part Number		Price per ea.
49-0582-00	Fuse Rack, Empty	20.00

FUSE PULLER

- Makes it easier to install & remove fuses in those hard to reach. areas
- For use on all 1/4" diameter glass fuses
- Eliminates risk of breaking fuses or damaging fuse blocks

COOPER Bussmann

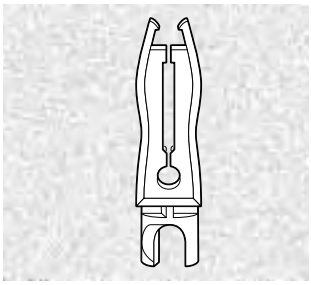

Part Number		Price per ea.
49-0628-00	Fuse Puller Tool	2.50

Visit Our Web Site:
happcontrols.com
for **NEW** Product Updates!!

BULK FUSES

- Made in U.S.A.
- Packaged in boxes of 100

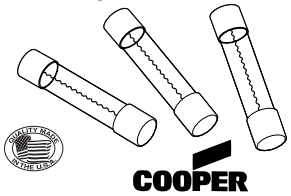

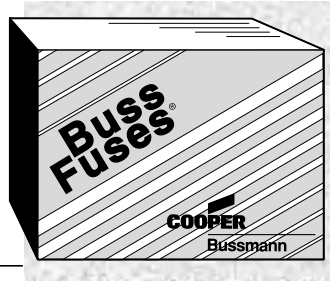

MDL Bulk Fuses - Slow Blow Type (1/4" diameter x 1-1/4" length)

Part Number	Amps	Volts	Price per Box of 100
49-0553-00B	1/2	250	44.35
49-0552-00B	3/4	250	44.35
49-0623-00B	8/10	250	44.35
49-0111-00B	1	250	33.65
49-4015-00B	1-6/10	250	33.65
49-0112-00B	2	250	33.65
49-0113-00B	2-1/2	250	33.65
49-0030-00B	3	250	33.65
49-0579-00B	3-2/10	250	33.65
49-0114-00B	4	250	33.65
49-0025-00B	5	250	33.65
49-0286-00B	6	250	33.65
49-0580-00B	6-1/4	250	33.65
49-0115-00B	7	250	33.65
49-0116-00B	8	250	33.65
49-0117-00B	10	32	49.65
49-0592-00B	15	32	49.65
49-0279-00B	20	32	49.65

AGC Bulk Fuses - Fast Blow Type (1/4" diameter x 1-1/4" length)

Part Number	Amps	Volts	Price per Box of 100
49-0621-00B	1/2	250	20.60
49-0547-00B	3/4	250	20.60
49-0118-00B	1	250	12.80
49-0625-00B	1-1/2	250	12.75
49-0119-00B	2	250	12.80
49-0024-00B	3	250	12.80
49-1236-00B	4	250	20.40
49-0120-00B	5	250	20.40
49-0296-00B	6	250	20.40
49-0613-00B	7	250	20.40
49-1231-00B	7-1/2	250	20.40
49-0566-00B	8	250	20.40
49-0560-00B	10	250	20.40
49-0277-00B	15	32	20.40
49-0278-00B	20	32	20.40
49-0785-00B	1/8	250	20.00

GMA Bulk Fuses - Fast Blow Type (5 x 20mm)

Part Number	Amps	Volts	Price per Box of 100
49-0498-00B	1	250	21.75
49-0497-00B	2	250	21.75
49-0670-00B	2.5	250	21.75
49-0591-00B	4	125	21.75
49-0495-00B	5	125	21.75
49-0290-00B	10	125	21.75

GMC Bulk Fuses - Medium Blow Type (5 x 20mm)

Part Number	Amps	Volts	Price per Box of 100
49-3066-00B	1	250	48.15
49-0620-00B	10	125	56.70

© HAPP CONTROLS

FUSE ASSORTMENT KITS

- Assortment of 75 of the most common Fast-Blow and Slow-Blow fuses
- Kit includes handy clear plastic box
- Each 5 pack of fuses has their own section with index
- A must for every service repairman
- See chart for listing of amperages

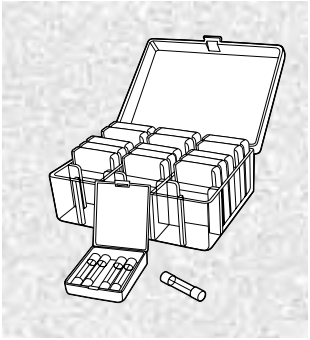

Part Number		Price per kit	L/6	L/12
49-0568-00	**General Purpose Fuse Kit**	29.00	27.75	24.95

Contains the following fuses:

Replacement Part Numer	Quantity	Amps	Type	Volts
49-0621-00	5	1/2	Fast-Acting	250
49-0118-00	5	1	Fast-Acting	250
49-0625-00	5	1-1/2	Fast-Acting	250
49-0119-00	10	2	Fast-Acting	250
49-0024-00	10	3	Fast-Acting	250
49-0120-00	5	5	Fast-Acting	250
49-0553-00	5	1/2	Slow-Blow	250
49-0111-00	5	1	Slow-Blow	250
49-0112-00	10	2	Slow-Blow	250
49-0030-00	10	3	Slow-Blow	250
49-0025-00	5	5	Slow-Blow	250

Part Number		Price per kit	L/6	L/12
49-0569-00	**Pinball Fuse Kit**	28.40	27.20	25.50

Contains the following fuses:

Replacement Part Number	Quantity	Amps	Type	Volts
49-0566-00	5	8	Fast-Acting	250
49-0547-00	5	3/4	Fast-Acting	250
49-0566-00	5	8	Fast-Acting	250
49-0494-00	5	3/8	Slow-Blow	250
49-0113-00	5	2-1/2	Slow-Blow	250
49-0030-00	25	3	Slow-Blow	250
49-0025-00	15	5	Slow-Blow	250
49-0115-00	5	7	Slow-Blow	250
49-0116-00	5	8	Slow-Blow	250

SPECIALTY FUSES

- Packed in boxes of 5
- Sold per fuse

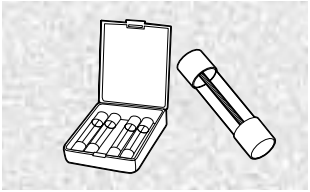

Part Number	Type	Amps	Volts	Price per ea.
49-1234-00	AGX	¼	250	1.10
49-1255-00	AGX	½	250	1.10
49-1256-00	AGX	1	250	1.10
49-1257-00	MCR	½	250	.92
49-1241-00	MCR	1½	250	.92
49-1238-00	GJV	½ w/leads	250	1.10
49-1239-00	GJV	3 w/leads	250	1.55
49-1240-00	GJV	4 w/leads	250	1.55
49-1237-00	GJV	5 w/leads	250	1.65

PANEL MOUNT FUSEHOLDER

- Designed to virtually eliminate the possibility of electrical shock
- Maximum panel thickness of 5/16"
- For 1/4" x 1-1/4" fuses
- .187" Quick Connect Terminals

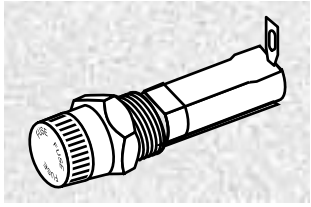

Part Number	Amps	Volts	Price per ea.	L/10
49-0023-00	20	300	2.60	2.50

PC MOUNT FUSEHOLDER

- For use with printed circuit boards
- Use with 1/4" diameter fuses with end stops

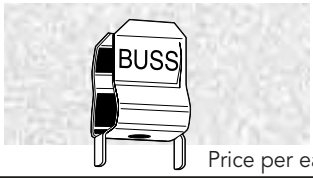

Part Number		Price per ea.
49-1272-00	PC Mount Fuseholder	.56

FUSE BLOCKS

- For 1/4" x 1 1/4" fuses
- Features individual barriers to reinforce the fuse clips while providing greater protection against clip damage and electrical shock
- Minimum order 10

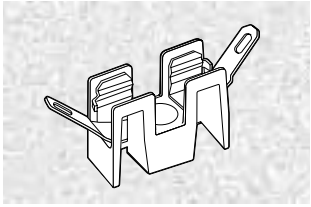

Part Number	Type	Terminal Type	Price per ea.	L/20
49-0563-00	Single	Solder	1.15	1.05
49-0395-00	Triple	3/16" Q.C.	2.00	1.85

MAGNETIC SWITCH

- Normally open or normally closed available

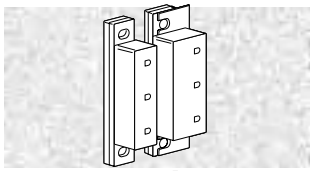

Part Number		Price per ea.
80-0306-00	Magnetic Switch, Normally Open	4.30
80-0306-10	Magnetic Switch, Normally Closed	4.30

HUBBELL VALISE® PLUG AND CONNECTOR

- Totally insulated impact and crush resistant yellow nylon body
- Unique patented clamp type terminals provide a superior electrical connection by "bundling" the conductor strands when clamps are tightened
- 8 specially designed load bearing locking lugs insure a positive fit.
- Powerful cord grips prevent conductor slippage and strain on wiring terminals
- Dead-Front Construction
- 2-Pole, 3-Wire Grounding
- Cord Diameter .220" - .660"
- UL & CSA listed, NEMA 5-15
- 15 Amp, 125 Volts

Part Number	Description	Length	Hubbell P/N	Price Each	L/6	L/12
91-4001-00	Plug Male	1.88"	5965VY	16.45	15.60	14.80
91-4002-00	Connector Female	2.63"	5969VY	24.80	24.15	23.45

EAGLE SUPER SPEC 90° ANGLE PLUG

- Allows equipment to be moved closer to wall
- 12A-125V, 2-Pole, 3-Wire Grounding
- 8 rotating positions to allow placement of cord in most convenient location
- UL & CSA listed
- Black color
- Made in the U.S.A.

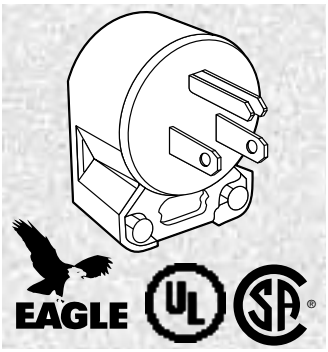

Part Number		Price per ea.	L/6
91-4000-00	Eagle Super Spec 90° Angle Plug	9.15	8.55

EAGLE THERMOPLASTIC PLUG & CONNECTOR

- Solid brass plug blades are firmly embedded into body
- Terminal screws are large head type for easy wiring, separated by barriers to prevent flashover or short circuits
- Strain relief clamps are superior designs, providing a secure mechanical grip
- Yellow thermoplastic is rigid and virtually unbreakable and can be used for hard service applications
- Dead-Front Construction
- 2-Pole, 3-Wire Grounding with cord clamp
- Cord diameter .250" - .655"
- UL & CSA listed, NEMA 5-15(15A), 5-20(20A)
- 125 Volts
- Made in the U.S.A.

Plug Male

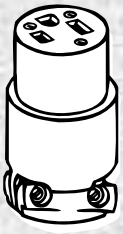

Connector Female

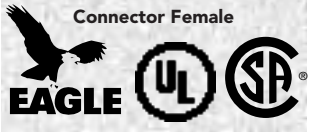

15 AMP TYPE:

Part Number		Dia.	Length	Eagle P/N	Price per ea.	L/10	L/20
27-1003-00	Plug Male	1-17/32"	1-3/4"	4867	5.20	4.60	4.10
27-1004-00	Connector Female	1- 7/32"	2-19/32"	4887	8.25	7.80	7.10

20 AMP TYPE:

Part Number		Dia.	Length	Eagle P/N	Price per ea.	L/10	L/20
27-1036-00	Plug Male	1-17/32"	1-3/4"	4409	4.80	4.20	3.60
27-1035-00	Connector Female	1-17/32"	2 -19/32"	4228	7.20	6.75	6.05

EAGLE EASY INSTALL PLUG

- 10A, 125V
- Cord size: 18-2 SPT-1
- Color: brown

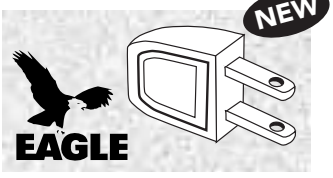

Part Number		Price per ea.
91-1168-10	Easy Install Plug	1.45

EAGLE ARMORED PLUG & CONNECTOR

- Steel clamps and armor are heavily plated for corrosion resistance
- Armor is knurled for easy gripping
- Solid brass plug blades are firmly embedded into body
- Terminal screws are large head type for easy wiring, separated by barriers to prevent flashover or short circuits
- Strain relief clamps are superior designs, providing a secure mechanical grip
- Vinyl Dead-Front Construction
- 2-Pole, 3-Wire Grounding with cord clamp
- Cord diameter .250" - .625"
- UL & CSA listed, NEMA 5-15
- 15 AMP, 125 Volts
- Made in the U.S.A.

Armored Plug Male

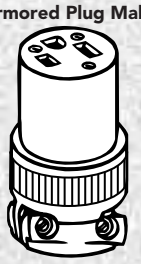

Armored Connector Female

15 AMP TYPE (125V):

Part Number		Dia.	Length	Eagle P/N	Price per ea.	L/10	L/20
91-1168-00	Armored Plug Male,	1-1/2"	2"	2867	4.10	3.90	3.50
91-1169-00	Armored Connector Female	1-1/2"	2-19/32"	2887	5.75	5.55	4.85

HEAVY-DUTY CUBE TAP

- 3-socket, 3-wire, 15A 125V
- Color: brown

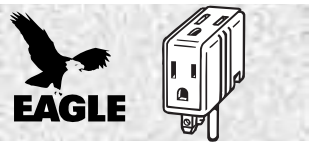

Part Number		Price per ea.	L/6
43-0527-00	Heavy Duty Cube Tap	6.15	4.90

VINYL GROUND ADAPTER

- Connects a 2-wire system to a 3-wire ground
- 15A 125V
- Durable vinyl and metal construction

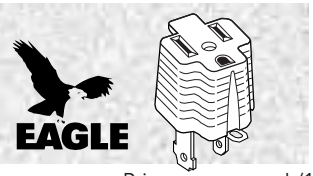

Part Number		Price per ea.	L/10
91-0042-00	Vinyl Ground Adapter	.66	.58

TRIPLE GROUND PLUG

- Converts single receptacle to 3 outlets
- 15A, 125VAC, NEMA 5-15
- 1" deep
- Color: Brown

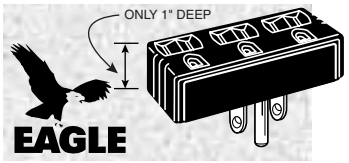

Part Number		Price per ea.
49-0952-00	Triple Ground Plug	6.10

UNIVERSAL ADAPTER PLUG IEC TO UNIVERSAL

- Easily convert your IEC plug to a Universal plug
- 15A/125V or 10A/250V

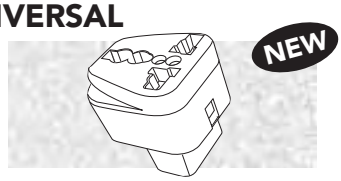

Part Number		Price per ea.
95-1513-00	Universal Adapter Plug IEC to Universal	7.45

© HAPP CONTROLS

HEAVY DUTY LINE CORD

- Stranded 3-wire
- Black rubber cover
- Ideal for use in power cords for machines
- 250' per roll
- Minimum order 250'

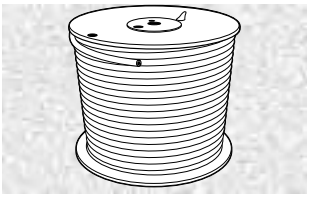

Part Number	Gauge	Volts	Diameter	Price per ft.	L/250 ft.	L/500 ft.
80-0045-16G	16	600	.435		.58	.55
80-1147-00	14	300	.350		.94	.89

HEAT SHRINK TUBING

- Black polyolefin tubing
- 100 ft. per spool
- Sold by the foot

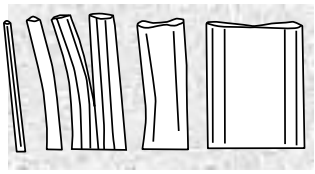

Part Number	Diameter	Price per ft.
95-0623-00	1/16"	.50
95-0624-00	1/8"	.68
95-0622-00	3/16"	.74
95-0625-00	1/4"	.89
81-0001-00	1/2"	1.30
95-0888-00	3/4"	1.50

SPIRAL CUT WRAP

- Polyethylene material
- Nominal O.D. .250"
- Nominal wall .031"
- Nominal pitch 3/8"
- Maximum bundle 2"
- Sold per foot
- 100 ft. per spool

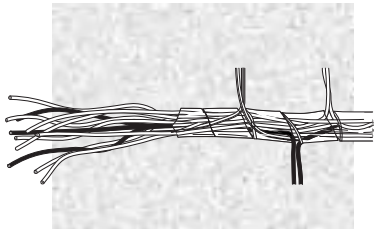

Part Number		Price per ft.
43-1019-00	Spiral Cut Wrap	.66

SPRING LOADED WIRE CONNECTORS

- Positive grip design
- For either solid or stranded wire
- Well suited for all types of splices
- Color-coded to make selection on the job easier
- Molded of pliable, fire resistant thermoplastic that is virtually indestructible
- Unique, fully-seated square-wire spring on the inside forms its own threads to draw the connector completely onto wire combinations
- Wide-throat skirt to guard against flashover
- Rated to 105 Degrees C
- UL and CSA listed

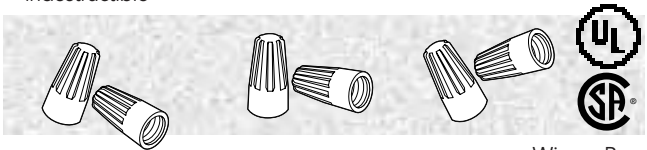

Part Number		Color	Wire Gauge	Bag of 100
43-0484-00	Spring Loaded Wire Connectors	Gray	22-16	9.70
43-0483-00	Spring Loaded Wire Connectors	Orange	22-14	12.10
43-0482-00	Spring Loaded Wire Connectors	Yellow	18-12	13.40
43-0917-00	Spring Loaded Wire Connectors	Blue	18-16	15.70

HOOK-UP WIRE

- Stranded wire
- 16, 18, 20, 22 and 26 gauge available
- Various colors available
- Custom color codes can be special ordered
- Sold in 500 ft. or 1000 ft. rolls
- UL listed

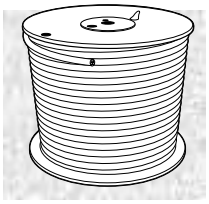

Part Number	Gauge	Feet per roll	Color Code	Price per roll
64-0055-00	16	500	Green	23.45
64-0056-00	16	500	White	23.45
64-0057-00	16	500	Black	23.45
64-0058-00	16	1000	Black	46.90
64-0059-00	16	1000	Red	46.90
49-3067-00	18	500	Yellow	25.00
49-1726-00	18	1000	Black	36.40
49-1116-00	20	500	Red	20.85
49-1098-00	20	500	Blue	20.85
49-1097-00	20	500	Violet	20.85
49-1092-00	20	500	Yellow	20.85
49-1088-00	20	500	Green	20.85
49-1086-00	20	500	White	20.85
49-1078-00	20	500	Brown	20.85
49-1119-00	20	500	Orange	20.85
49-1110-00	20	500	Black	20.85
49-1105-00	20	500	Gray	20.85
49-1207-00	22	500	Red	16.70
49-0361-00	22	1000	Red	21.40
49-1139-00	22	500	Blue	16.70
49-1154-10	22	1000	Blue/Black Stripe	42.80
49-1138-00	22	500	Violet	16.70
49-1152-00	22	500	Yellow	16.70
49-1152-10	22	1000	Yellow	21.40
49-1149-00	22	500	Green	16.70
49-1209-00	22	500	White	16.70
49-1209-10	22	1000	White	21.40
49-1133-10	22	1000	White/Green Stripe	42.80
49-1130-10	22	1000	White/Black Stripe	42.80
49-1128-00	22	500	Brown	16.70
49-1121-00	22	500	Orange	16.70
49-1172-00	22	500	Black	16.70
49-1173-00	22	500	Gray	16.70
49-1173-10	22	1000	Gray	21.40
49-1188-00	26	500	Red	14.60
49-1184-00	26	500	White	14.60
49-1183-00	26	500	Brown	14.60
49-1182-00	26	500	Orange	14.60
49-1181-00	26	500	Black	14.60
49-1180-00	26	500	Gray	14.60
49-1187-00	26	500	Violet	14.60
49-1186-00	26	500	Yellow	14.60
49-1185-00	26	500	Green	14.60

WIRE WRAP

- 30 AWG wire wrap
- Sold by the roll only
- 50 ft. per roll
- Used to repair traces

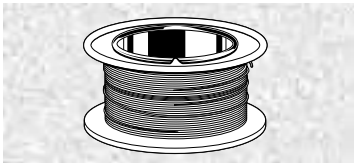

Part Number		Price per roll
49-1275-00	Blue	19.35
49-1276-00	Yellow	19.35
49-0843-00	White	19.35

HAPP CONTROLS

Your Source for Quality Wire, Cable and Accessories

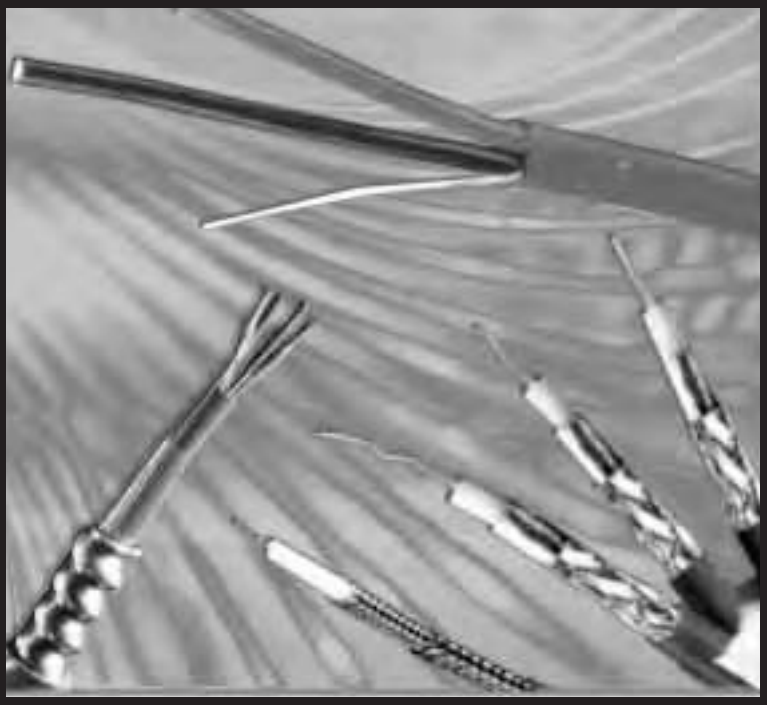

- **Hook-up Wire**
- **Cat 5 Cable**
- **Cat 5E Cable**
- **Cat 6 Cable**
- **Fiber Optic Cable**
- **Fiber Optic Cleaning Kits**
- **Connectors**
- **Power Cable**
- **Power Cords**
- **Tools**
- **Fiber Optic Termination Kits**

Our Experienced Sales Staff is waiting to help you with your cabling needs. Please have the following information handy so they can assist you with your order in a more timely manner.

Information we need to process your order

- Type: Cat 5, Cat 5E, Cat 6, Fiber Optic
- Color
- Gauge
- How Many Pairs
- Jacket: Plenum or Non-Plenum, PVC
- Shielded or Non-Shielded
- Size of spool: 500 ft. or 1,000 ft.
- Specific brands are available, what is your choice

© HAPP CONTROLS

CAT 5 CABLE

- 24 AWG solid bare copper
- Four unbounded twisted pairs
- 1,000 foot put-ups

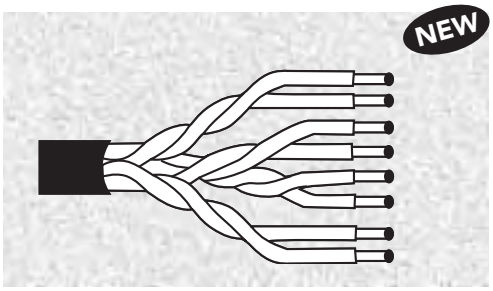

Part Number	Belden No.	Shielded	Plenum	Color	Price per box
49-1472-00	1624P	Yes	Yes	Gray	390.15
49-1473-00	1624P	Yes	Yes	Blue	382.50
43-1735-00	1624P	Yes	Yes	Red	414.10
49-0964-1624R	1624R	Yes	No	Blue	254.90

CAT 5E CABLE

- 24 AWG solid bare copper
- Four unbounded twisted pairs
- 1,000 foot put-ups

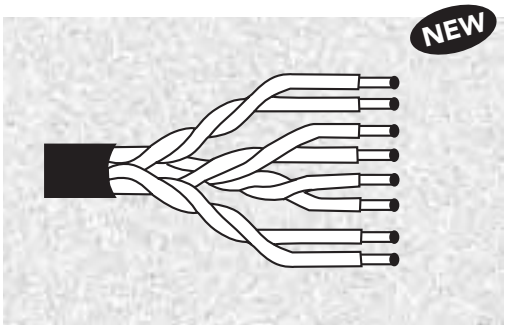

Part Number	Belden No.	Shielded	Plenum	Color	Price per box
49-1361-00	1585A	No	Yes	Gray	210.10
49-1470-00	1585A	No	Yes	Blue	210.10
49-0129-00	1583A	No	No	Gray	69.35

CAT 5E SHIELDED PATCH CORDS

- Enhanced 350MBPS
- Shielded RJ45 connectors on each end
- Foil shielded and polyester shielded
- Stranded
- Snagless and molded boots
- Color: Grey

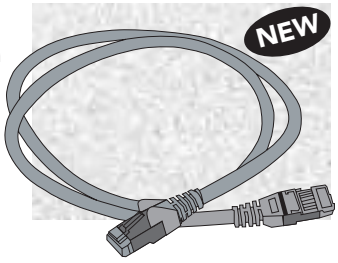

Part Number		Price per ea.
64-0064-00	10' CAT 5E Patch Cord	6.10
64-0063-00	25' CAT 5E Patch Cord	10.15

LanRoverPRO™ CAT 5 TESTER WITH LCD DISPLAY

- High performance cable length measurement CAT 5 tester that identifies multiple faults clearly without interpretation
- Tests for shorts, opens, miswires, reversals and split pairs
- Has one-ended testing with pre-test for fast result, clear wire mapping form displayed on 2-line, 16 character LCD display

- The LanRoverPROTM has a convenient snap together case for easy storage and convenient patch cable testing
- Auto-off/auto-on. Provides up to 10 times better battery life than other testers
- One-ended testing with Pre-Test mode for fast results
- Built-in tone generator mode with selectable tones and pair capability
- This unit includes a carrying case and patch cables.

Part Number		Price per ea.
92-1135-00	LanRoverPRO™ CAT 5 Tester with LCD Display	178.50

CAT 5E COUPLER

- For Category 5 Enhanced cable
- Gold plated contacts
- Connects two cords
- Color: Black

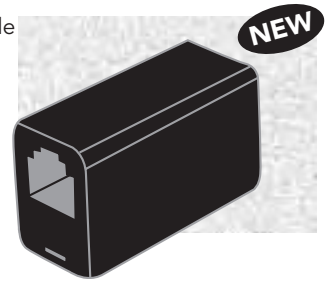

Part Number		Price per ea.
49-1729-00	CAT 5E Coupler	5.00

ROUND CABLE SLITTER/STRIPPER

- Slits/strips round cables
- Use on Coax or Cat 5 cables
- Range: 0.18" – 1.0" diameter
- Adjustable cutting depth
- Blade swivels for longitudinal or spiral cuts

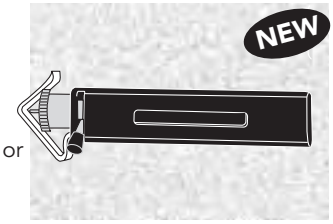

Part Number		Price per ea.
92-0352-00	Round Cable Slitter/Stripper	29.95
92-0351-00	Replacement Blade	6.95

CAT 5 CABLE JACKET STRIPPER

- Designed for Cat 5/5E cables only
- Will not knick inner conductors
- Long life blade
- Durable high impact plastic housing
- Easy to use, no adjustments necessary
- Molded from yellow plastic to make it easier to find. No more lost tools!
- Length: 3.5", weight: 23 grams

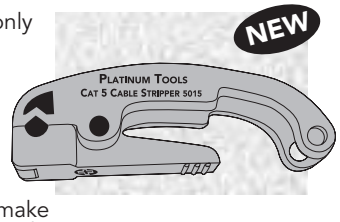

Part Number		Price per ea.
92-0613-00	Cat 5 Cable Jacket Stripper	12.45

FIBER OPTIC CABLE

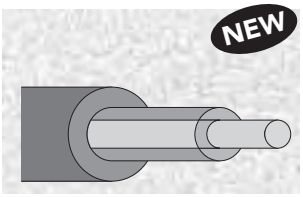

- Glass Fiber Optic Cable used for progressive signage and player tracking systems
- Price per foot
- Sold per roll
- Call for roll size availability (roll sizes vary)
- Quantity discounts available

Part Number		Price per ft.
49-1752-00	Fiber Optic Cable With Glass	1.30

FIBER OPTIC TERMINATION KIT

- Kit includes: cleave tool, crimp tool, fiber stripper, cable stripper, & scissors

Part Number		Price per kit
92-1004-00	Fiber Optic Termination Kit	1,529.95

FIBER OPTIC SYSTEM TEST KITS

- Measures insertion loss on 400 Micron V System
- Part 92-1004-09 tests pins SMA connectors and ST connectors
- Part 92-1004-10 tests pins only

Part Number		Price per ea.
92-1004-09	Fiber Optic Kit Tests Pins and Connectors	2,748.90
92-1004-10	Fiber Optic Kit Tests Pins Only	2,402.10

TECHSPRAY FIBER OPTIC CLEANING KIT

- Cleans cable lubricant, hand oils and other contaminants from fiber optics
- Each kit includes:
  - 50 pre-saturated isopropyl alcohol wipes
  - One 10 oz. can Envi-Ro-Tech duster
  - One 2 oz. bottle of isopropyl alcohol
  - 50 narrow tip foam swabs
- 6 kits per case

TECHSPRAY™

Part Number		Price per kit
29-0027-00	TechSpray Fiber Optic Cleaning Kit	29.55

FOR CABLE MANAGEMENT SOLUTIONS SEE PAGES 36 & 37

FIBER OPTIC PLENUM SX CABLE WITH KEVLAR

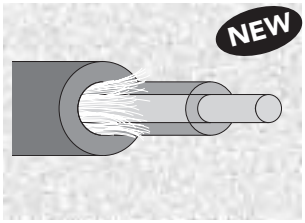

- Glass fiber optic used for progressive signage and player tracking systems
- 2.4mm Plenum Simplex cable
- Price per foot
- Sold per roll
- Call for roll size availability (roll sizes vary)
- Quantity discounts available

Part Number		Price per ft.
49-1820-00	Fiber Optic Plenum SX Cable With Kevlar	2.05

FIBER OPTIC TOOL KIT

- Kit includes: crimper, nick-free strippers, wire cutters, cutting scissors, true view fiber scope kit, polishing disks, component box, swabs, alcohol bottle, syringe, & tweezers, zippered case

Part Number		Price per kit
92-0977-00	Fiber Optic Tool Kit	116.00

CRIMP AND CLEAVE CONNECTORS

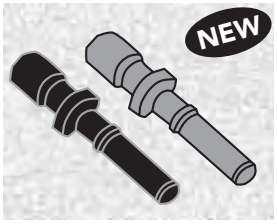

- Used in player tracking systems
- For FiberWire™ V-System 400um
- These connectors can only be terminated with VK-6-400 termination kit, Happ No. 92-1004-00
- Overall connector dimension: 1.18”

Part Number		Price per ea.
49-1753-00	Blue Crimp and Cleave Connector	3.60
49-1754-00	Black Crimp and Cleave Connector	3.60

FIBER OPTIC CONNECTOR

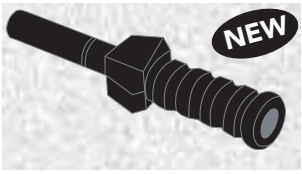

- IGT ref # 219 229 90
- Used in Keno Pens

Part Number		Price per ea.
70-0556-00	Fiber Optic Connector	4.00

SIMPLEX CONNECTORS

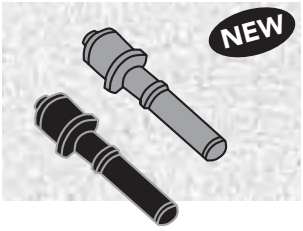

- For plastic optical fiber cable
- Used in Ticket-In / Ticket-Out Cable
- Simplex connector provides a quick and stable connection for applications that require a component-to-connector retention force of 8 Newtons (1.8 lb.)
- Crimp ring included
- Available in gray or blue

Part Number		Price per ea.
HFBR-4501	Simplex Connector, Gray	1.10
HFBR-4511	Simplex Connector, Blue	1.10

© HAPP CONTROLS

EZ-RJ45® TERMINATION KIT

EZ-RJ45® CRIMP TOOL

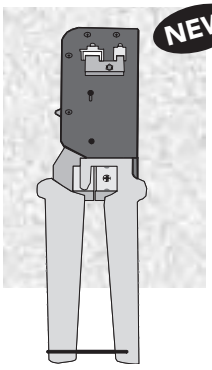

This high quality crimp tool is designed to quickly crimp and cut the wires of the EZ-RJ45® Connector one easy simple operation!

- Works on most other RJ-11, RJ-12 and RJ-45 connectors
- Precision ground crimp dies
- Straight action cut and crimp performs the best crimp
- Full cycle ratcheting mechanism provides consistent terminations every time
- Crimps and cuts the wire in one cycle
- Built in wire cutter and stripper
- High strength, long life steel frame
- Rust resistant black oxide coating
- Superior quality at an economical price
- Use with EZ-RJ45® connector (92-0611-00)
- Length 8", weight 1lb.

Kit Includes:

- EZ-RJ45® Crimp Tool 92-0612-00
- (50) EZ-RJ45® Connectors 92-0611-00
- (1) Laminated instruction sheet

EZ-RJ45® CONNECTORS

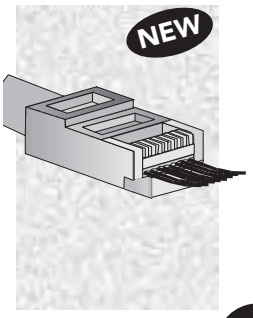

The new patented EZ-RJ45® connector simplifies the twisted pair terminations by allowing the wires to be inserted through the connector and out the front. This allows the technician to easily verify the proper wiring order. Termination is made easier by pulling the connector down over the cable jacket and seating it tightly in the rear of the connector. Reducing the distance between the wire twists and contacts improves performance!

- Simple one-piece design – no bars or liners
- Easy to verify wire sequence
- Reduces scrap, no wasted crimps
- Faster terminations
- More reliable, higher performance
- Compatible with most RJ-45 crimp tools except for AMP
- Crimp with the patented EZ-RJ45® Crimp Tool (92-0612-00) for even faster more reliable terminations
- Use in category 3, 5, 5E and 6
- FCC compliant
- Sold by box of 50

Part Number		Price per ea.
92-0609-00	EZ-RJ45® Termination Kit	88.45
92-0612-00	EZ-RJ45® Crimp Tool Only	62.40
92-0611-00	EZ-RJ45® Connectors Only (Min Box of 50)	.61

MODULAR RJ45 PLUG

- For use with solid conductor round cable
- 8 position, 8 contacts
- Unshielded

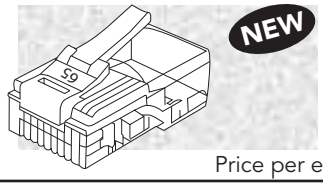

Part Number		Price per ea.
27-1349-00	Modular RJ45 Plug	.45

RJ11 & RJ45 MODULAR PLUGS

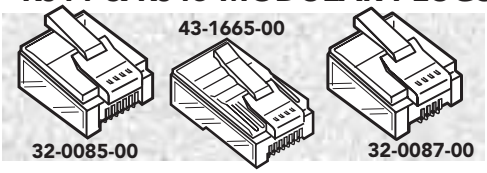

Two Prong Stranded Flat Cable Plugs		
Part Number		Price per ea.
32-0085-00	RJ11 6P4C Plug	.16
43-1665-00	RJ11 6P6C Plug	.16
32-0087-00	RJ45 8P8C Plug	.17
32-0095-10	RJ45 8P8C Plug, Shielded	1.20

Two Prong Solid Round Cable Plug		
Part Number		Price per ea.
32-0089-00	RJ45 8P8C Plug	.20
32-0095-00	RJ45 8P8C Plug, Shielded	1.20

SCREW TYPE MODULAR JACK ASSEMBLY

- Single jack with snap cover
- Double sided sticker
- Mounting screws included
- Gold plated contacts
- Wiring: 6P4C - USOC; 8P8C - AT&T

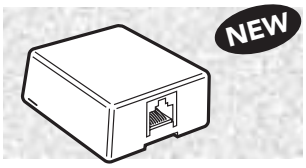

Part Number		Price per ea.
32-0091-00	6P4C Modular Jack Assembly	1.30
32-0092-00	8P8C Modular Jack Assembly	1.55

90° 110 STYLE MODULAR CAT 5 JACK

- Designed to be used with the 110 type punch down tool
- The mini jack universal design will fit in most keystone hole openings such as Amp, Hubbell, Krone, ICC or other .58" x .76" standard sizes
- The 110 IDC contacts will accommodate 22-26 AWG solid wire
- Color: Blue

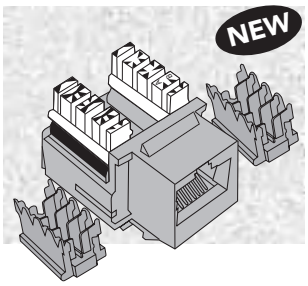

Part Number		Price per ea.
27-1350-00	90° 110 Style Modular Cat 5 Jack	4.20

RJ11 DUPLEX ADAPTOR

- Splits one line into two
- Ivory color
- Gold plated contacts
- 6P4C plug, 2 6P4C jacks

Part Number		Price per ea.
32-0090-00	RJ11 Duplex Adaptor	1.30

PUNCHDOWN TOOL WITH BLADE

- Spring loaded impact
- Hi-Lo settings
- Spare blade storage in handle
- Blades / Handle inter-changeable with Harris-Dracon 814 tool
- Type 110

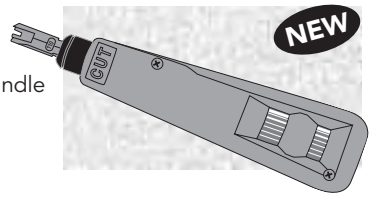

Part Number		Price per ea.
92-0901-00	Punchdown Tool With Blade	47.65

HEAVY DUTY APPLIANCE CORD

- For Refrigerators, Air conditioners, etc
- 14 gauge, 3-wire
- 9 ft. long
- UL listed

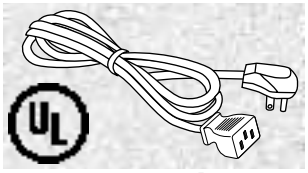

Part Number		Price per ea.
49-0950-00	Heavy Duty Appliance Cord	16.95

POWER CORD

- 3-wire, SJT black jacket
- 8 ft. or 6 ft. long
- 3-prong plug on one end, 3-hole computer style receptacle on the other end
- UL Listed

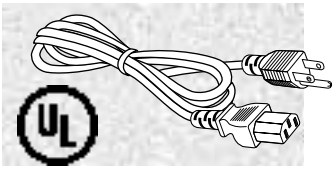

Part Number		Price per ea.
80-0213-00	16-Gauge, 8' Long	10.90
80-1205-00	18-Gauge, 6' Long	4.90

POWER CORD

- 10 ft. length
- 3-Wire plug on one end, bare wires on other end
- 12 per case
- UL Listed

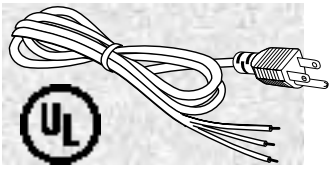

Part Number		Price per ea.
80-1200-00	Power Cord, 18-Gauge	3.40

POWER CORD WITH ANGLE PLUG

- Angle plug allows machine to be put closer to wall
- 18" long
- 16 gauge, 3-wire
- Black SSJT jacket

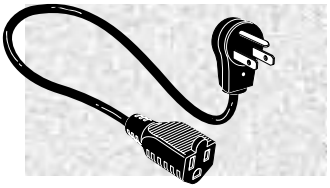

Part Number		Price per ea.
49-3072-00	Power Cord with Angle Plug	10.90

6 FT. POWER CORD WITH RIGHT ANGLE FEMALE PLUG

- 3-Wire, SVT black jacket
- 6 ft. long
- 125V, 10A
- UL

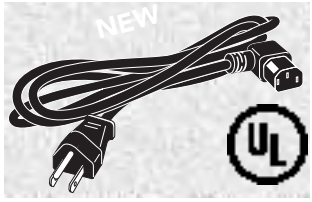

Part Number		Price per ea.
80-1205-RA	6Ft. Power Cord w/Right Angle Female Plug	4.80

SLENDER PLUG EXTENSION CORD

- Low profile 3-outlet extension cord
- Used for the Spintek hopper fill
- Plug is only 1/2" thick
- 13A, 125V, 1625W
- 16-gauge, 3-wire
- UL recognized

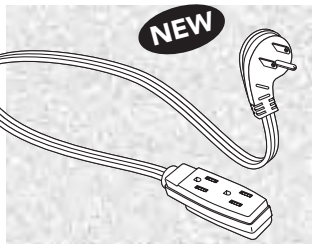

Part Number		Price per ea.
80-0328-00	Slender Plug, 3 ft.	6.10
80-0217-00	Slender Plug, 6 ft.	4.95

THE "SPIDER" POWER CORD

- A Happ Controls exclusive
- Unique power cord for slot machines, v kiosks and other applications
- Allows connection of peripheral access have outlet free for other accessories
- Plugs into the 120 VAC power source and gives you 3 additional outlets (current 5 to 6 amps)
- Within a slot machine, such as IGT Eye Games, Game Kings, and others it allows connection of a player tracking s and a progressive sign and still have an free for other 110 VAC accessories
- Within a video game, it allows connecti 110 VAC bill validator, soldering iron or 110 VAC accessories
- Within a kiosk, it allows connection of a bill validator, plug-in power supply for audio amplifier or trackball interface or other 110 VAC accessories
- Black SVT 18-gauge, 3-wire

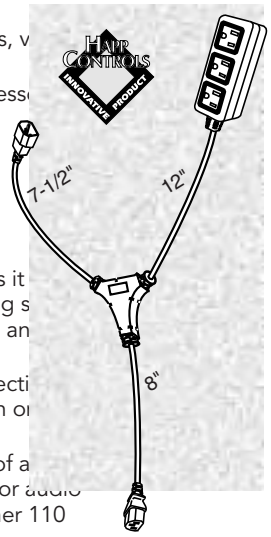

Part Number		Price per ea.
80-1143-00	The "Spider" Power Cord	14.55

HEAVY-DUTY POWER CORD WITH 90° PLUG

- Ideal for vending machines, slot machines, amusement games and other devices
- 90° plug allows machine to be put closer to the wall
- Black SJT jacket
- UL recognized
- CSA approved
- 9 ft. 14-gauge, 3-wire or 12 ft. 16-gauge, 3-wire available

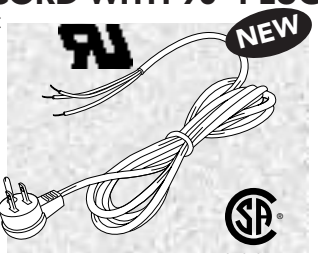

Part Number		Price per ea.
80-1200-14	Power Cord With 90° Plug, 9ft./14ga.	6.30
49-0948-16	Power Cord With 90° Plug, 12ft./16ga.	6.30

EXTENSION CORD

- 16 gauge/3-wire, SJTW
- 15A/300V
- UL listed
- SJTW cords resist deterioration from moisture and abrasion
- Manufactured with stranded and cabled copper conductors and solid molded plugs for longer life
- Outer jacket will not mark floors or walls

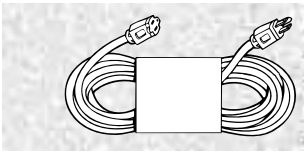

Part Number		Price per ea.
80-0300-00	15 ft. Extension Cord - Orange	12.05
80-0300-01	15 ft. Extension Cord – Black	12.05

12" POWER CORD ADAPTER WITH ROTATING PLUG

- 12" length
- Color: Gray
- Wire: 14 gauge stranded
- UL listed
- Converts any 110V (up to 14 gauge) two or three prong plug to a 90-degree plug
- Plug also rotates 360 degrees to adapt to any outlet
- Allows placement of equipment closer to wall

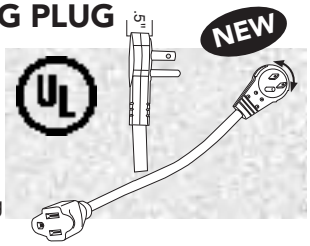

Part Number		Price per ea.
49-6241-00	12" Power Cord Adapter With Rotating Plug	6.95

© HAPP CONTROLS

6-OUTLET POWER STRIP WITH SURGE PROTECTOR

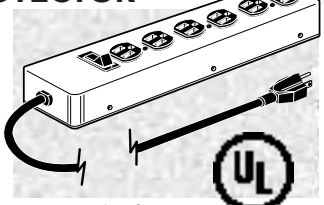

- Ideal for rows of vending machines or games
- Protects equipment from dangerous power surges and spikes that can destroy delicate electronic circuitry
- Lighted ON, OFF switch
- Built-in resettable circuit breaker
- Built-in brackets for easy mounting
- 125V AC, 15 Amps
- Rugged 6 foot cord
- UL listed
- Durable metal construction

Part Number		Price per ea.	L/6
49-0487-00	Six Outlet Power Strip with Surge	14.60	12.80

POWER STRIP WITH SURGE PROTECTOR

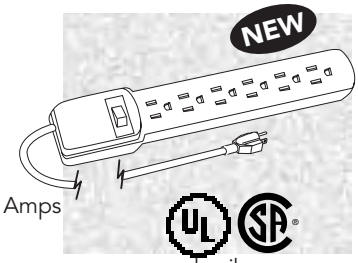

- 6 outlets
- 3 ft. power cord
- Heavy duty plastic case
- 1 MOV surge protection
- L-N surge protection
- EMI/RFI noise filtration
- LED indicator, 125V AC, 15 Amps
- UL listed, CSA
- Protect your equipment from power surges and spikes
- Integrated circuit breaker switch with auto reset

Part Number		Price per ea.	L/12
49-0963-10	Power Strip with Surge Protector	4.25	3.99

SURGE PROTECTED POWER STRIP WITH PHONE/FAX PROTECTION

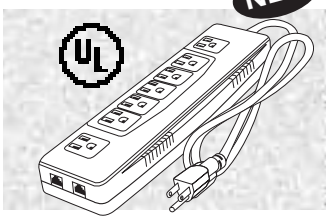

- Integrated circuit breaker switch
- Full 3 line protection
- 3 ft. power cord
- 15 Amps, 125V AC
- UL listed
- Durable plastic case with built in mounting holes
- 7 outlets are rotated 90 degrees allowing you to plug in power supply plugs
- Provides surge protection for all your equipment including your phone or data line

Part Number		Price per ea.
49-0487-10	Surge Protected Power Strip with Phone/Fax	14.95

ON-LINE GAME SURGE SUPPRESSOR

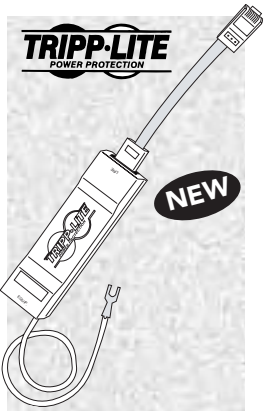

- Protect your on-line equipment from lightning strikes through the phone line, electrostatic discharge, faulty wiring
- Offers simultaneous protection of two dialup telephone lines (RJ45, wires 4-5 and 3-6, 260V clamping)

  Perfect for any on-line game or equipment

  - Golden Tee™ Golf games
  - Counter top games
  - Digital download jukeboxes
- 6-inch heavy gauge grounding lead
- 5-inch patch cable included
- Maximum current: 250 amps
- Instruction manual and warranty information included
- Lifetime product warranty
- Compatible with RJ11 or RJ45 style connectors

Part Number		Price per ea.
80-1248-00	On-Line Game Surge Suppressor	25.99

TRIPP LITE SUPER 7 SURGE SUPPRESSOR

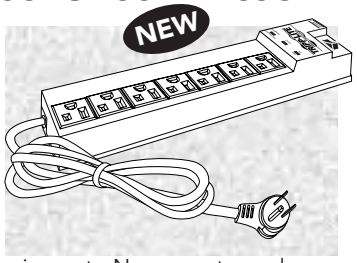

- Size: 1.5" X 2.75" X 11.25"
- UL1449 TVSS, UL1363, CUL
- 15 amp circuit breaker
- EMI/RFI noise filtering
- 3 diagnostic LEDs indicate AC present, line fault & protection present
- $25,000 Ultimate Lifetime Insurance covers connected equipment - No warranty cards required for coverage!
- Keyhole supports for wall mounting
- Recessed and lighted power switch
- Color-coded cord identifiers
- 7 outlets with child safety covers
- 7-ft. cord with space-saving right-angle plug
- 1,050 joules; 42,500 amps, 12 per carton

Part Number		Price per ea.
49-5296-00	Tripp Lite Super 7 Surge Suppressor	29.35

POWER STRIP WITH SURGE PROTECTOR

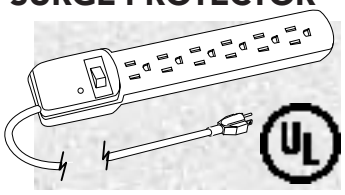

- Protect your equipment from power surges and spikes
- 6 outlets
- Lighted ON/OFF switch
- Plastic case
- UL listed

Part Number		Price per ea.	L/12
49-0963-00	4 ft. Power Strip with Surge Protector	8.45	7.95
49-1356-00	6 ft. Power Strip with Surge Protector	8.95	8.45

6-OUTLET METAL POWER STRIP WITH RIGHT ANGLE PLUG

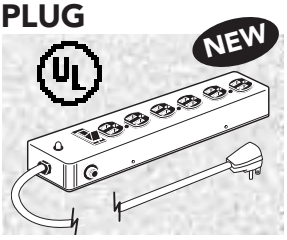

- Full 3 line surge protection
- Durable metal construction
- UL listed
- Built-in brackets for easy mounting
- Circuit breaker prevents overloading
- Rugged 6 foot 14AWG SJT cord
- Rating: 125V AC, 15 Amps, 1875W, 3 x 75 joules
- Neon light indicating ON/OFF & protection
- Right angle plug allows this power strip to be mounted in areas that are tight on space
- Protects equipment from dangerous power surges and spikes

Part Number		Price per ea.	L/6
49-0487-90	6 Outlet Power Strip w/ Right Angle Plug	14.60	12.80

COMPUTER SURGE PROTECTOR

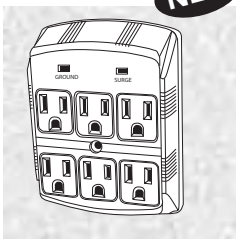

- 6-outlet / 3-conductor
- Converts your duplex wall outlet into six surge protected outlets
- Protection indicator lights
- UL listed; Color: off-white
- Surge protection: 750 joules
- Lifetime 100% equipment replacement guarantee from manufacturer
- Power shut down protection – When surge protection capacity is reached, power shuts off

Part Number		Price per ea.
64-0075-00	Computer Surge Protector	13.90

SINGLE OUTLET SURGE PROTECTOR

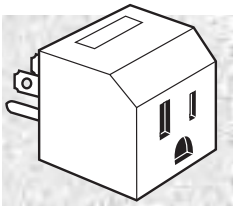

- UL listed
- 15A-125VAC, 1875 watts rating
- Clamping voltage: 330 volts
- Maximum spike current: 4500 amps
- Maximum surge voltage: 6000 volts
- Surge protection on all three lines
- Response time: Less than 1 nanosecond
- Prevents dangerous power surges that can destroy delicate electronic circuitry
- Indicator light signals surge protection is on
- Maximum surge dissipation: 270 Joules

Part Number		Price per ea.	L/6
27-1007-00	Single Outlet Protector	9.45	9.35

COOLING FAN FOR MERIT POWER SUPPLY

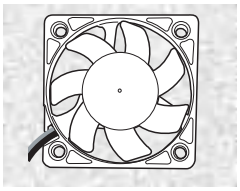

- Replaces FD8015B12W3
- 3-1/8" x 3-1/8" x .59" (80mm x 80mm x 15mm)
- Sleeve bearing
- 12VDC
- 3500 rpm, 45 cfm

Part Number		Price per ea.
80-0006-35	Cooling Fan for Merit Power Supply	5.10

COOLING FAN WITH 110VAC ADAPTER

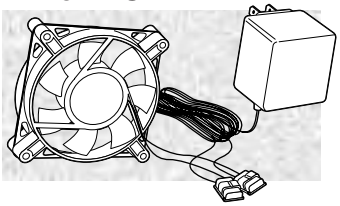

- 3 -1/8" x 1" 12vdc fan
- 110v adapter pre-wired
- Simply plug adapter into a 110v outlet and the fan will power up

Part Number		Price per ea.	L/25	L/50
80-1140-00	Cooling Fan with 110vac Adapter	24.15	20.50	18.15

SOCKET 7 CPU FAN

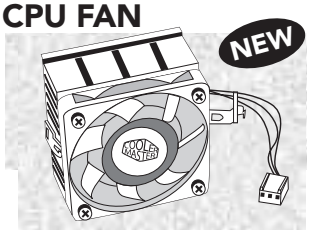

- 12VDC ball bearing fan
- 3 pin connector
- 9.21~10.3cfm
- 5000 rpm
- Noise level: 27~30dB
- Used on Sigma Slot Machines
- Dimensions: 2" x 2" x 1.25" with heat sink
- For AMD K6/K6-2/K6-III, Intel Pentium 60~266MHz, Cyrix 6x86, 6x86MX and MII and IBM 6x86 processors

Part Number		Price per ea.	L/6
80-0006-13	Socket 7 CPU Fan	12.20	11.20

COOLING FAN FOR MERIT CPU

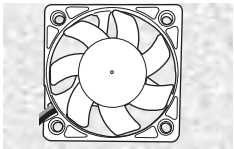

- Ball bearing fan used in Merit Megatouch for the CPU board
- 50mm x 50mm x 10mm
- 12VDC, 0.16A

Part Number		Price per ea.
80-0006-15	Cooling Fan for Merit CPU	9.35

COOLING FAN ASSEMBLY WITH BASE AND 6" LEADS

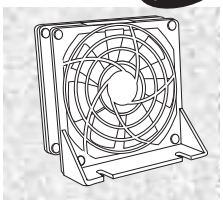

- Fan size is: 3.15" x 3.15" x 1"
- Sleeve bearing
- Mounting base and grilles included
- 6" leads with connector
- Easily mounts to cabinet to cool CPU boards
- This is an original Midway item used in games like: Gauntlet, Hyperdrive, Road Burners
- 12vdc, brushless
- UL and CE approved

Part Number		Price per ea.
A-21055	Cooling Fan Assembly with Base and 6" Leads	9.35

COOLING FAN

- Industry standard size 4.69" square x 1.5" deep
- Low noise; impedance protected
- 110/120V AC fan easily mounts in most equipment
- Sealed ball or sleeve bearing type
- 98-106 CFM, 2,900 - 3,200 RPM
- Cast aluminum frame

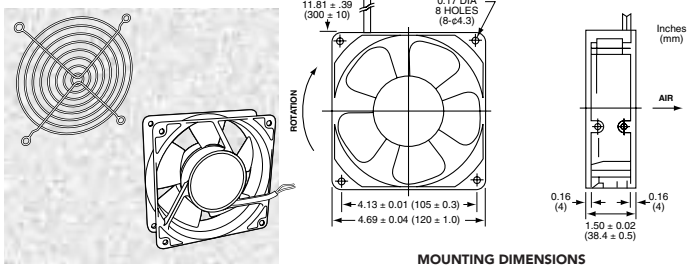

MOUNTING DIMENSIONS

Part Number		Price per ea.	L/25
80-0006-10	Fan with Sealed Ball Bearings with Wire Leads	17.20	14.90
80-0006-11	Fan with Sleeve Bearings	14.00	12.70
80-0006-20	Metal Guard for Cooling Fan	1.55	1.40

3-1/2" BALL BEARING FAN

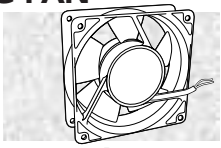

- 15/16" x 3-1/2" x 3-1/2"
- 50/60 Hz

Part Number		Price per ea.
70-0226-00	115 Volt Fan	20.10
70-0226-10	12 Volt Fan	17.70
70-0226-50	Finger Guard for 3-1/2" Fan	2.85

COOLING FAN FOR CDS HARD DRIVE

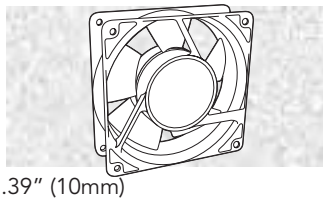

- 12VDC ball bearing fan
- 12" wire termination
- 3800 rpm, 10 cfm
- Used on CDS hard drives
- Noise level: 29.0 db
- Size: 2" (52mm) x 2" (52mm) x .39" (10mm)
- Impedance and polarity protected
- Impeller and frame glassfiber reinforced thermoplastic UL94V-0

Part Number		Price per ea.
80-0006-12	CPU DC Cooling Fan	17.65

© HAPP CONTROLS

MOLEX CONNECTORS

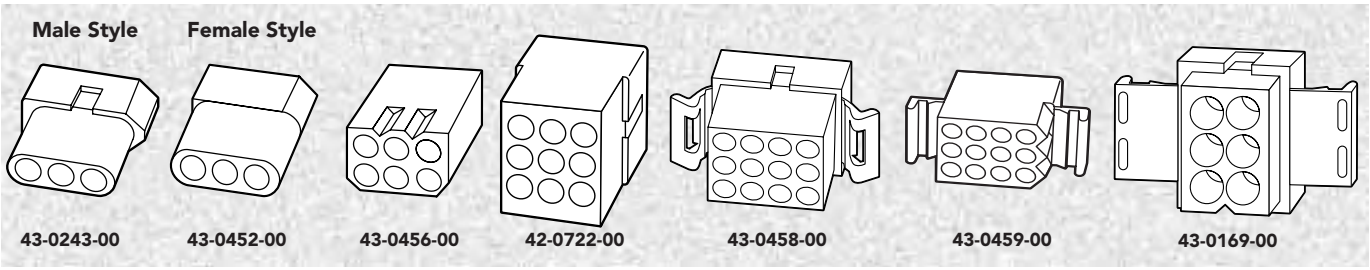

- Commonly used on all types of equipment
- Various sizes available
- Passive (friction) lock
- UL File No. E-29179
- Natural Nylon Color
- 2 Different sizes (.093" and .062")

.093" Family

Part Number		Molex Ref. No.	Price per ea.	L/25
43-0250-00	2-Pin Male	03-09-2022	.66	.61
43-0248-00	2-Pin Female	03-09-1022	.66	.61
43-0243-00	3-Pin Male	03-09-2032	.91	.86
43-0452-00	3-Pin Female	03-09-1032	.91	.86
43-1105-00	4-Pin Male Square	03-09-2040	1.05	.96
43-1107-00	4-Pin Female Square	03-09-1040	1.05	.96
43-0453-00	4-Pin Male (Vertical)	03-09-2042	1.05	.96
43-0255-00	4-Pin Female (Vertical)	03-09-1042	1.05	.96
43-0454-00	4-Pin Male (Square)	03-09-2049	1.20	1.15
43-0455-00	4-Pin Female (Square)	03-09-1049	1.20	1.15
43-1108-00	6-Pin Male Square	19-09-2068	1.30	1.20
43-1106-00	6-Pin Female Square	19-09-1069	1.30	1.20
43-0491-00	6-Pin Male	03-09-2062	1.30	1.20
43-0456-00	6-Pin Female	03-09-1064	1.30	1.20
42-0722-00	9-Pin Male	03-09-2092	1.50	1.45
43-0143-00	9-Pin Female	03-09-1094	1.50	1.45
43-0458-00	12-Pin Male w/ Ears	03-09-2122	1.60	1.55
43-0459-00	12-Pin Female w/ Ears	03-09-1121	1.60	1.55
43-0460-00	15-Pin Male w/ Ears	03-09-2158	1.80	1.75
43-0461-00	15-Pin Female w/ Ears	03-09-1154	1.80	1.75

.062" Family

Part Number		Molex Ref. No.	Price per ea.	L/25
43-0015-00	2-Pin Male	03-06-2023	.59	.52
43-0444-00	2-Pin Female	03-06-1023	.59	.52
43-0017-00	3-Pin Male	03-06-2032	.68	.63
43-0467-00	3-Pin Female	03-06-1032	.68	.63
43-0468-00	4-Pin Male (Vertical)	03-06-2042	1.15	1.05
43-0469-00	4-Pin Female (Vertical)	03-06-1042	1.15	1.05
43-0470-00	4-Pin Male Square	03-06-2044	1.15	1.05
43-0471-00	4-Pin Female Square	03-06-1044	1.15	1.05
43-0169-00	6-Pin Male	03-06-2062	1.30	1.20
43-0332-00	6-Pin Female	03-06-1062	1.30	1.20
43-0472-00	9-Pin Male	03-06-2092	1.20	1.10
43-0473-00	9-Pin Female	03-06-1092	1.20	1.10
43-0474-00	12-Pin Male	03-06-2122	1.20	1.15
43-0475-00	12-Pin Female	03-06-1122	1.20	1.15
43-0476-00	12-Pin Male w/ Ears	03-06-2121	1.20	1.15
43-0477-00	12-Pin Female w/ Ears	03-06-1121	1.20	1.15
43-0478-00	15-Pin Male w/ Ears	03-06-2151	1.55	1.50
43-0479-00	15-Pin Female w/ Ears	03-06-6155	1.55	1.50

MOLEX PINS (TERMINALS)

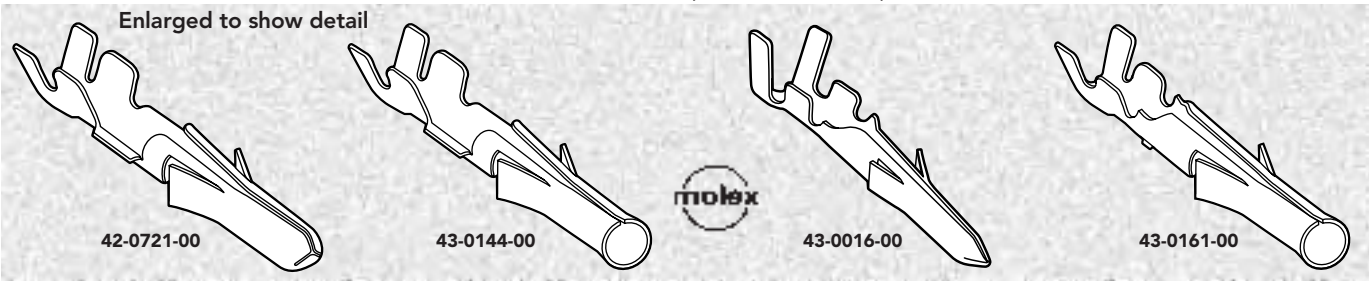

- Pins/Terminals required for use in above Molex connectors
- Snap-fit design allows for reliability and ease of installation
- Minimum order 10
- Molex quality

.093" Family

Part Number		Molex Ref. No.	Price per ea. L/10	L/100	L/1000
42-0721-00	Male .093" Pin (Terminal)	02-09-2118	.14	.13	.12
43-0144-00	Female .093" Pin (Terminal)	02-09-1119	.14	.13	.12

.062" Family

Part Number		Molex Ref. No.	Price per ea. L/10	L/100	L/1000
43-0016-00	Male .062" Pin (Terminal)	02-06-2103	.14	.13	.12
43-0161-00	Female .062" Pin (Terminal)	02-06-1103	.14	.13	.12

MOLEX PINS (TERMINAL) EXTRACTOR TOOL

- Allows easy removal of Molex pins from connector
- A must for every toolbox
- For servicing of Molex connectors

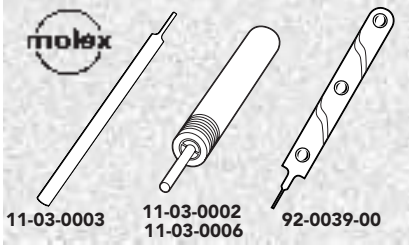

Part Number		Molex Ref. No	Price per ea.
11-03-0006	Molex Extractor Tool for .093" Pins	11-03-0006	19.80
11-03-0002	Molex Extractor Tool for .062" Pins	11-03-0002	19.80
11-03-0003	Molex Extractor Tool for .156" Pins	11-03-0003	10.35
92-0039-00	Molex Extractor Tool for .165" Pins	11-03-0044	26.05

MOLEX TRIFURCON CRIMP-STYLE TERMINAL

- For use with all female connectors with .156 centers
- For wire size 18-24 AWG
- Grips on three sides instead of only one
- Molex ref. no 08-50-0189

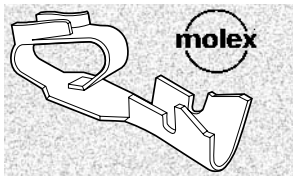

Part Number		Price per ea.	L/10	L/100	L/1000
43-0515-00	Molex Trifurcon Crimp-Style Terminal	.19	.18	.15	

MOLEX CRIMP-STYLE TERMINAL

- For use with all Molex female connectors with .156 centers
- For wire size 18-24 AWG
- Molex ref. no 08-50-0106

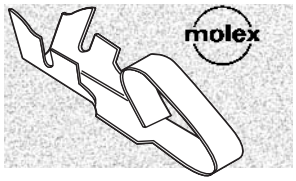

Part Number		Price per ea.	L/10	L/100	L/1000
43-0523-00	Molex Crimp-Style Terminal	.20	.19	.16	

MOLEX CRIMP-STYLE TERMINAL

- For use with female connectors with .100 centers
- For wire size 22-30 AWG
- Molex ref. no 08-50-0114

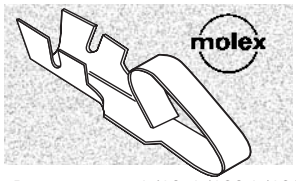

Part Number		Price per ea.	L/10	L/100	L/1000
43-0524-00	Molex Crimp-Style Terminal	.20	.19	.16	

MOLEX C-GRID FEMALE TERMINAL

- Used on bill validator harness
- Used with crimp housing 43-0817-00
- .100 pitch
- 250V 3 amp
- Ref. No. 16-02-0069
- Sold in packs of 100

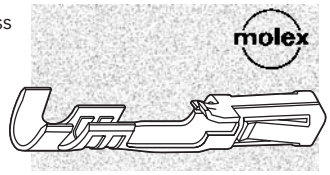

Part Number		Price per ea.	L/10	L/100	L/1000
43-0816-00	C-Grid Female Terminal	.20	.19	.16	

MOLEX MINI-FIT TERMINAL

- Female terminal, 18-24 AWG
- Molex ref. no. 39-00-0039

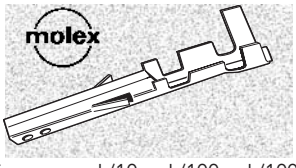

Part Number		Price per ea.	L/10	L/100	L/1000
43-1224-00	Molex Mini-Fit Terminal	.20	.19	.16	

MOLEX MINI-FIT JR RECEPTACLE

- Dual row
- Molex ref. no. 39-01-2060

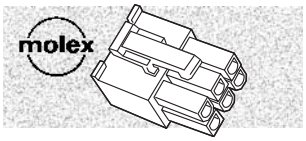

Part Number		Price per ea
43-1225-00	Molex Mini-Fit Jr Receptacle	.48
43-1225-01	Strain Relief 15-04-0296	1.20

MOLEX C-GRID INTERIM CLIP

- Used on bill validator harness
- .100 pitch
- Dual row
- Requires two 3-circuit plugs (see 43-0817-00)
- 250V 3 amp
- Sold in eaches

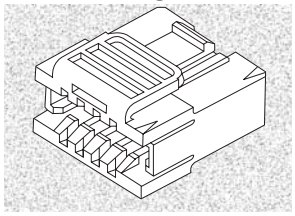

Part Number		Price per ea.
43-0818-00	C-Grid Interim Clip	1.65

MOLEX 2-PIN POWER CONNECTORS

- Male plug mates to power input for both Happ Controls and Wells Gardner monitors (2-pin)

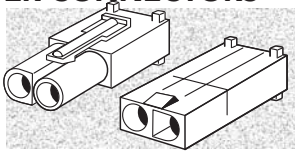

Part Number		MOLEX. No.	Price per ea.	L/10
43-0536-00	2-Pin Male w/o ears .093 centers	19-09-1029	.66	.60
43-0543-00	2-Pin Female .093 centers	19-09-2029	1.50	1.30

MOLEX FEMALE HOUSINGS

- Used with .156 Header Wafer Connectors

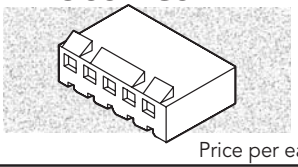

Part Number	Ref. No.		Price per ea.
43-0698-00	09-50-7201	Molex 20-Pin Female Housing	1.30
43-0923-00	09-50-3101	Molex 10-Pin Female Housing	.64
43-0792-00	09-50-3051	Molex 5-Pin Female Housing	.63
43-0924-00	09-50-3041	Molex 4-Pin Female Housing	.63

MOLEX C-GRID CRIMP HOUSING AND PIN

- Used on bill validator harness
- .100 pitch
- Single row version D
- Back ribs
- 3-circuit

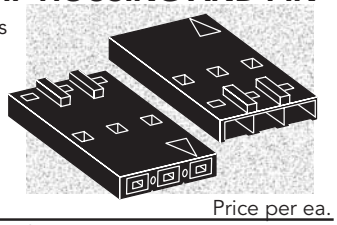

Part Number	Molex No.		Price per ea.
43-0817-00	50-57-9303	C-Grid Crimp Housing	.63
43-1223-00	16-02-0086	Pin for C-Grid Crimp Housing	.13

SWITCH CONNECTOR

- Use on popular miniature snap switches such as Cherry D4, Omron V10G and Microswitch V3
- Fits .187" or .250" terminals for 22 ga. wire
- Single plug convenience for easy on and easy off maintenance
- Éliminates incorrect wiring with single disconnects
- Reliable and fast IDC one-time wiring
- Housing and contact design allows for "end" or "through" terminations.
- Eliminates the need for double wire crimp
- UL recognized
- Cover (42-3506-01) provides added strain relief

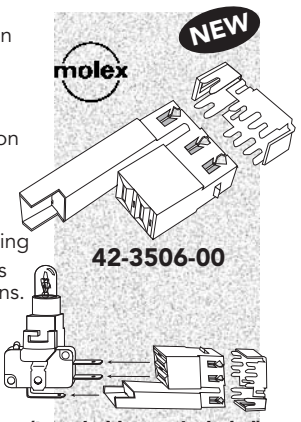

(Lampholder not included)

Part Number		Price per ea.
42-3506-00	Molex Switch Connector	.63
42-3506-01	Molex Connector Cover	.13

© HAPP CONTROLS

AMP TERMINAL PINS

- Sold per each
- Packed in bags of 100

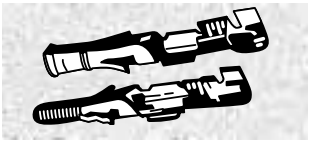

Part Number	Ref. No.		Price per ea.
43-1116-00	1-66103-7	Amp Pin	.66
43-1115-00	1-66105-8	Amp Socket	.79
43-0794-00	170363-1	Amp Pin	.20
43-0793-00	170365-1	Amp Socket	.20
43-0801-00	16-02-0115	C-Grip	.25
43-0800-00	16-02-0103	C-Grip	.25
43-0521-00	350547-1	Amp Pin	.25
43-0522-00	350550-1	Amp Pin5	.25

AMP INSERTION/EXTRACTION TOOL

- For AMP connectors

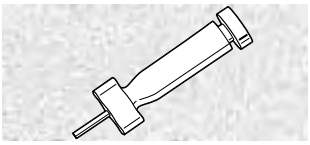

Part Number		Ref. No.	Price per ea.
92-0107-00	AMP Insertion Tool	45580-1	34.25
92-0296-00	AMP Insertion Tool	59804-1	33.65
92-0297-00	AMP Insertion Tool	59803-1	27.35
43-0998-00	AMP Insertion Tool	91002-1	24.31
92-0272-00	AMP Extraction Tool	455822-2	32.55
92-0924-00	AMP Extraction Tool	318837-1	58.15
821903-1	AMP Extraction Tool	821903-1	26.00
822154-1	AMP Extraction Tool	822154-1	8.35

AMP METRIMATE 19-PIN CONNECTOR

- Commonly used in monitors and slot hoppers
- Connects easily when you cannot visually connect them
- .197 centers
- Color: Black

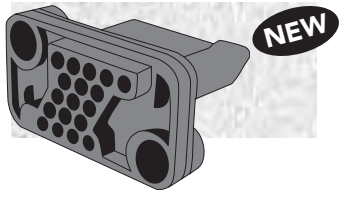

Part Number		Price per ea.
43-0551-01	AMP Metrimate 19-Pin Connector	1.85

PS/2 EXTENSION CABLE

- Shielded and jacketed PVC cable
- Male on one side and Female on the other
- Used to extend length of PS/2 devices such as keyboards, mouse, etc.
- 6′ overall length, 6 pin

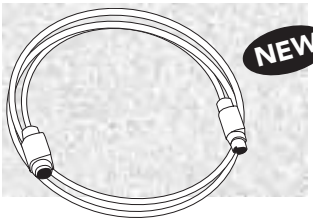

Part Number		Price per ea.
55-0273-00	PS/2 Extension Cable, 6′	5.10

USB EXTENSION CABLE

- Used to extend a USB device such as a trackball, keyboard, printer, modem, scanner, digital camera, etc.
- Extends the A connection (flat end) of a USB cable
- Shielded PVC jacketed cable
- 6′ overall length

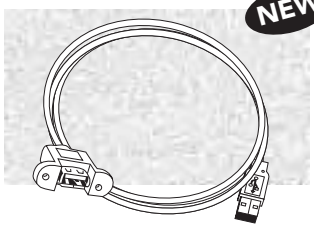

Part Number		Price per ea.
55-0278-00	USB Extension Cable, 6′	7.15

AMP PICABOND CRIMP TOOL

- Amp VS-3 Hand Tool Kit includes a standard VS-3 hand tool assembly, a crimp height gauge, a black nylon cord, a repair tag and a carrying case
- For splicing and bridging wires using Amp Picabond connectors

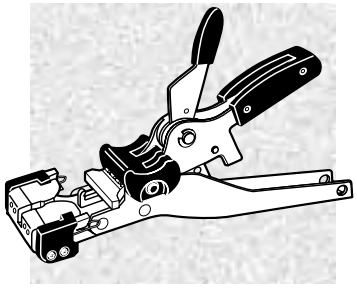

Part Number	Ref. No.		Price per ea.
43-0795-00	244271-1	Amp Picabond Crimp Tool	361.30
43-0796-00	60947-3	Red Striped Connector	.40
43-0797-00	609454-4	Green Striped Connector	.34

AMP PLUG AND RECEPTACLE

- Available in 2-pin or 12-pin configuration

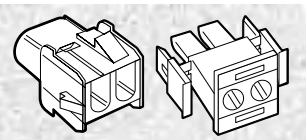

Part Number	Ref. No.		Price per ea.
43-0799-00	1-480698	2-pin Amp Plug	.71
43-0798-00	1-480699	2-pin Amp Receptacle	.71
43-1046-00	1-480708	12-pin Amp Plug	.95
43-1047-00	1-480709	12-pin Amp Receptacle	.95

AMP MTA-100 CLOSED END HOUSINGS

- .100 centers
- Red plugs for 22 AWG wire
- Mates with all 100 post header assemblies

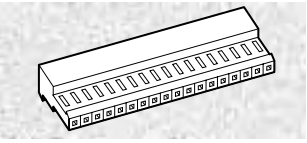

Part Number	Ref. No.	No. Pins	Price per ea.
43-0810-00	640440-6	6	.83
43-0809-00	640440-8	8	1.15
43-0808-00	1-640440-0	10	1.50
43-0914-00	1-640440-6	16	1.60
43-0807-00	1-640440-8	18	2.20

MONITOR EXTENSION CABLE

- Used as VGA or SVGA monitor extension
- Extend your existing short monitor cable to provide useful flexibility
- DB15 Male on one end and DB15 Female on the other
- Ferrite cores on each end for noise suppression
- Shielded cable with multi-coax construction provides a sharp, clear display
- 6′ overall length, 15 pin

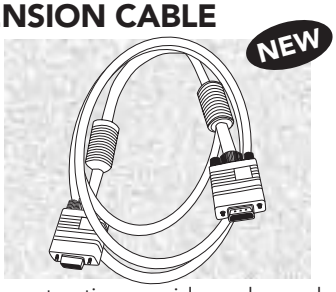

Part Number		Price per ea.
55-0282-00	Monitor Extension Cable, 6′	10.20

AMP MTA-156 CLOSED END HOUSINGS

- .156 centers
- Red plugs for 22 AWG wire
- Mates with all .156 post header assemblies

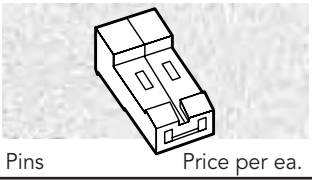

Part Number	Ref. No.	No. Pins	Price per ea.
43-0806-00	643193-2	2	.53
43-0805-00	643193-3	3	.73
43-0804-00	640428-4	4	.53
43-0803-00	640428-6	6	.84
43-0802-00	640428-7	7	.84

3M SCOTCHLOK® CONNECTORS

- Fully insulated
- Easy to install – no stripping or twisting

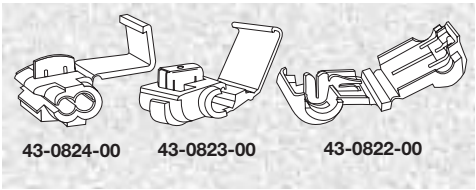

Part Number	3M No.	Color	Description	AWG	Pack	Price per ea.
43-0824-00	560B	Dark Blue	Scotchlok™	14-18	100	.21
43-0823-00	558	Red	Scotchlok™	14-18	50	.41
43-0822-00	951	Red	T-Tap (.250)	18-22	50	.22

TAP SPLICES

- Fully insulated
- Easy to install - No stripping or twisting
- Packed 25 per box
- Minimum order: 1 Box

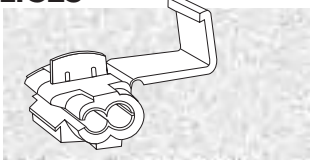

Part Number	Color	AWG	Price per box
43-1132-00	Blue	14-18	3.80
43-1131-00	Red	18-22	3.80

3M CONNECTORS

- 2 wire
- Just trim wires, insert and crimp
- Sold per each
- Packed 100 per box

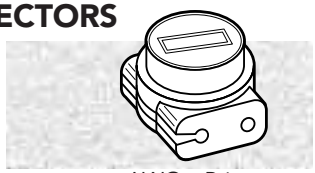

Part Number	Color	AWG	Price per ea.
43-0782-00	Green Tap Bridge	19-26	.79
43-0781-00	Red 2 to 3-Wire Butt Splice	19-26	.47
43-0783-10	Yellow 2-Wire Butt Splice	22-26	.45

FLAG TERMINALS

- Fully insulated
- Color: Red
- .250 female lug
- For use with 18-22 AWG wire
- Sold in bags of 100

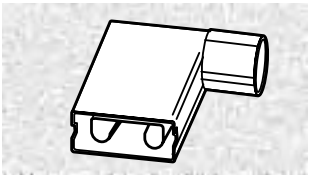

Part Number		Price per ea.
43-0827-00	Flag Terminals	13.35

CRIMP STYLE WIRE TERMINALS

- Fully insulated nylon terminals
- Pack of 100
- 14-22 AWG

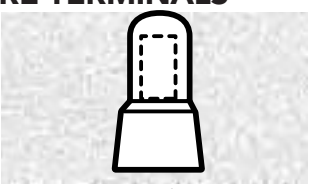

Part Number		Price per pack	L/10	L/20
43-0789-00	Crimp-Style Wire Terminals	11.55	10.95	10.30

WIRE DISPENSER KIT

NEW

- Includes five spools of color coded 22 AWG electronic wire
- Crimping/wire stripping tool included
- Mounts on wall or work bench
- Refillable
- Includes: (5) 100 ft. spools of 22 AWG wire Black, Red, Green, Blue & White
- UL1569 wire
- Rated: 105 degree C, 300 volts
- Made in USA

Part Number		Price per ea.	L/3
49-6184-00	Wire Dispenser Kit	52.05	49.95

Replacement Spools		Price per ea.
49-6184-10	Black Wire, 22 awg, 100 ft. Spool UL1569	6.25
49-6184-20	Red Wire, 22 awg, 100 ft. Spool UL1569	6.25
49-6184-30	Green Wire, 22 awg, 100 ft. Spool UL1569	6.25
49-6184-40	Blue Wire, 22 awg, 100 ft. Spool UL1569	6.25
49-6184-50	White Wire, 22 awg, 100 ft. Spool UL1569	6.25

8" CRIMPING TOOL/WIRE STRIPPER/BOLT CUTTER

- Crimps 22-18, 16-14, & 12-10 AWG terminals and connectors
- Color-coded crimp teeth for fast and accurate crimping
- AWG numbered wire stripper for 10, 12, 14, 16, 18, & 20-22 gauge wire
- Bolt cutter for 8-32, 10-24, 10-32, 6-32, & 4-40 threads
- An affordable, 4-way crimping/stripping tool
- Length: 8"

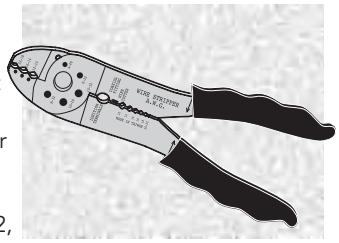

Part Number		Price per ea.
92-0274-00	8" Crimping Tool	6.75

CRIMPING/WIRE STRIPPER/BOLT CUTTING HAND TOOL

- Ideal for prototype work, small production volumes and repair jobs
- Clean cutting wire cutter
- Wire Stripper for 10,12, 14, 16, 18, and 20 gauge wire
- Bolt Cutter for 8-32, 10-24, 10-32, 6-32, and 4-40 threads
- Crimping tool for .093" Molex pins (terminals)

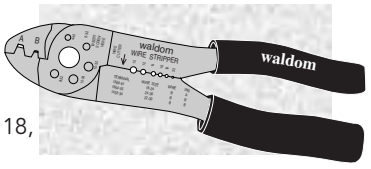

Part Number		Price per ea.
11-03-0004	Hand Crimping/Wire Stripper/ Bolt Cutting Tool	20.45

SARGEANTS CRIMPING TOOL

- For crimping .062, .093, .100, .156 and JST pins
- Ref. No. 1028CT

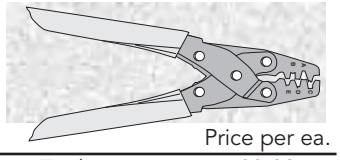

Part Number		Price per ea.
92-0032-00	Sargeants Crimping Tool	33.99

© HAPP CONTROLS

FORK TERMINALS

- Various sizes available
- Simply insert stripped wire and crimp
- Color-coded for easy identification:
  RED-22 to 18 AWG
  BLUE-16 to 14 AWG
- Sold per pkg. of 100

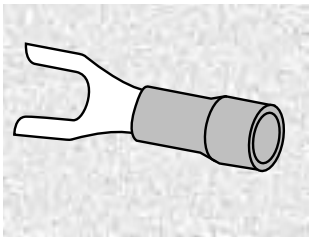

Part Number		Color	Stud Size	Wire Gauge	Price per pkg.
43-0680-00	Insulated Fork Term.	Red	6	22-18	8.35
43-0681-00	Insulated Fork Term.	Blue	8	16-14	8.35

RING TERMINALS

- Vinyl insulated butt seam
- Sold in packs of 100

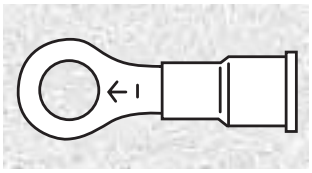

Part Number	Stud Size	AWG	Price per pkg.
43-0784-00	#6	18-22	18.15
43-0785-00	#8	18-22	18.15

QUICK DISCONNECT TERMINALS

- Translucent insulator provides fast visual check of the wire connection
- Color coded for easy identification:
  Red (22 to 18 AWG)
  Blue (16 to 14 AWG)
- Wire stop prevents insertion of over-stripped wires
- Minimum order 10

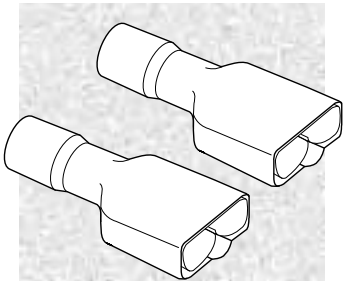

Part Number		Price per ea.	L/1000
43-0401-00	.110 Female Fully Insulated Quick Disconnect for use on 18-22 AWG Wire	.28	.26
43-0538-00	.187" Female Fully Insulated Quick Disconnect for use on 18-22 AWG Wire	.19	.17
43-1229-00	.187" Female Fully Insulated Quick Disconnect for use on 14-16 AWG Wire	.19	.17
43-0539-00	.250" Female Fully Insulated Quick Disconnect for use on 18-22 AWG Wire	.19	.17
43-0541-00	.250" Female Fully Insulated Quick Disconnect for use on 14-16 AWG Wire	.19	.17

PIGGY-BACK TERMINAL

- Insulated
- Terminal size .250

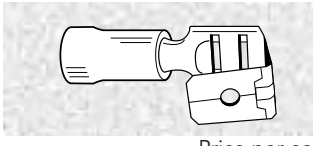

Part Number		Price per ea.
42-2098-00	Piggy-back Terminal	.95

SEMI-INSULATED MALE QUICK DISCONNECTS

- Vinyl insulated butt seam
- Terminal size: .250
- Sold in packs of 100

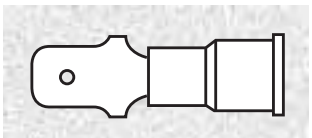

Part Number	Color	AWG	Terminal	Price per pkg.
43-0826-00	Red	18-22	.250	10.30
42-2097-00	Blue	14-16	.250	10.30

SEMI-INSULATED FEMALE QUICK DISCONNECTS

- Vinyl insulated butt seam
- Sold in packs of 100

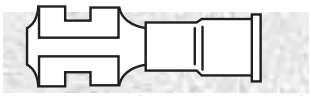

Part Number	Color	AWG	Terminal	Price per pkg.
43-0682-00	Red	18-22	.187	9.70
43-0787-00	Red	18-22	.110	9.70
43-1070-00	Red	18-22	.250	9.70
43-0542-00	Blue	14-16	.187	9.70
43-0674-00	Blue	14-16	.250	9.70

FULLY INSULATED MALE QUICK DISCONNECT

- Fully vinyl insulated butt seam

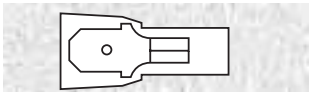

Part Number	Color	AWG	Terminal	Price per ea.
43-0525-00	Red	18-22	.250	.19
43-1269-00	Blue	14-16	.250	.19

JAE CONNECTOR

- For miniature brown .060 plug
- Sold in strips of 100

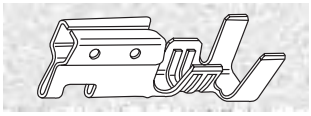

Part Number		Price per strip
43-0815-00	JAE Connector	7.10

CLOSED END CONNECTORS

- An easy yet safe way to connect wires together, simply insert stripped wires and crimp
- Listed by: UL (E13288) & CSA (LR7189)
- Insulated

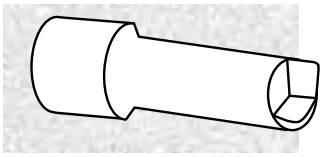

Part Number		Price per ea.	L/100
43-0174-00	Closed End Connector, 22-14 AWG	.15	.14
43-0780-00	Closed End Connector 16-10 AWG	.15	.14

BUTT CONNECTORS

- Insulated for additional protection
- Simply insert stripped wire and crimp
- Various sizes available
- Minimum order of 100
- Color-coded to make selection on the job easier

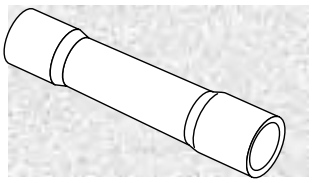

Part Number		Color	Wire Gauge	Price per ea. L/100	L/500
43-0421-00	Butt Connector	Red	22-18	.15	.13
43-0422-00	Butt Connector	Blue	16-14	.15	.13
43-0423-00	Butt Connector	Yellow	12-10	.19	.17

EDGE CONNECTORS

- Dual row connector
- Available in 20, 56 and 7 Pin Configurations

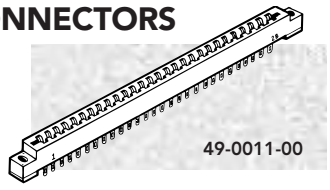

Part Number		Price per ea.	L/25
49-0011-00	56 Pin "Jamma" Connector with Solder Terminals	3.40	3.15
49-0011-56	56 Pin "Jamma" Connector for Push-In Terminals (Without Terminals)	3.15	2.95
49-0276-00	Push-In Terminals for 49-0011-56 Edge Connector	.19	.17
49-0013-00	20 Pin Connector with Solder Terminals	3.40	3.15

VELCRO® ONE-WRAP CABLE TIES

- Hundreds of uses
- Ideal for cord and cable control
- Can be reused numerous times
- Size: 1/2" wide x 6" long
- Color: Black

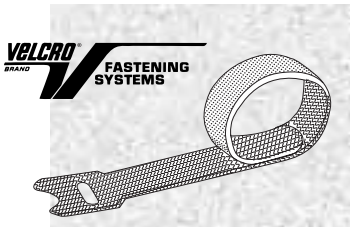

Part Number		Price per ea.
90-0011-00	Velcro® One-Wrap Cable Ties	.48

VELCRO HOOK AND LOOP TAPE

- For fastening a wide variety of items
- Adhesive backing
- .75", 1" or 2" wide tape
- Color: Black
- 25 yards. per roll
- Sold per yard

Part Number		Price per yd.
90-0003-03	.75" Velcro Loop Side Only	2.10
90-0004-03	.75" Velcro Hook Side Only	2.10
90-0003-01	1" Velcro Loop Side Only	3.15
90-0004-01	1" Velcro Hook Side Only	3.15
90-0003-02	2" Velcro Loop Side Only	4.00
90-0004-02	2" Velcro Hook Side Only	4.00

3M DUAL LOCK™ LOW PROFILE RECLOSABLE FASTENER

- Pressure sensitive adhesive backing bonds to many surfaces
- Numerous interlocking mushroom-shaped stems positively "snap" together
- Unlike some reclosable fasteners, this is self-mating so only one roll needed reducing inventory
- Light-weight, thin profile (0.067", 1.7mm)

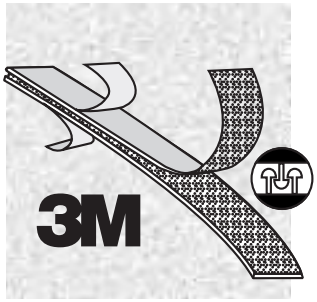

- 1" wide, clear color
- Clear acrylic adhesive, -20°F to 150°F
- Stemmed surfaces glide over each other for easy positioning prior to pressing and snapping together
- Sold by the foot
- 75 ft per roll
- 3 rolls per case

Uses include:

- Electronics, exhibits, trade shows, Point of Purchase, framing
- Anywhere you need easy access or quick assembly

Part Number		Price per ft.
90-0015-00	3M Dual Lock™ Low Profile Reclosable Fastener	1.35

DO YOU WANT TO KNOW EACH TIME YOUR ORDER SHIPS OUT?

e-mail notification and order **tracking information** is now available from Happ Controls! Contact your sales representative or e-mail our customer service department at: **info@happcontrols.com** with your account information.

CABLE TIES

- Patented dual locking mechanism facilitates superior locking power
- Low-profile head conserves space and reduces snagging
- Flexible Nylon construction allows ease of use
- Various colors available
- UL approved Nylon
- Sold per bag of 1,000

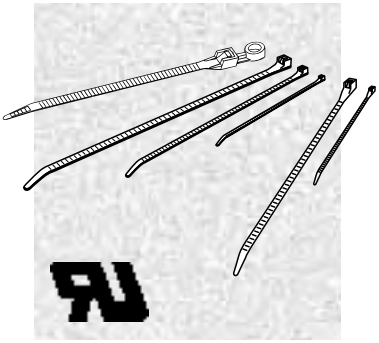

Part Number	Length	Max. Bundle Diameter	Color	Tensile Strength	Price per bag
90-1034-00	4"	13/16"	Natural	18 lbs	11.00
90-1036-00	6"	1-1/2"	White	30 lbs	15.60
90-1036-03	7.5"	2"	Black	50 lbs	8.15
90-1038-00	8"	2-3/16"	Natural	50 lbs	21.90
90-1038-10	8"	2-3/16	Red	50 lbs	26.25
90-1038-12	8"	2-3/16	Blue	50 lbs	26.25
90-1038-13	8"	2-3/16	Green	50 lbs	26.25
90-1038-15	8"	2-3/16	Yellow	50 lbs	26.25
90-1038-16	8"	2-3/16	Black	50 lbs	26.25
90-1038-17	8"	2-3/16	Orange	50 lbs	26.25
90-1211-00	11"	3"	Natural	75 lbs	39.40
90-0063-00	11"	3"	Natural	55 lbs	15.60

CABLE TIES WITH MOUNTING HOLE

- Same features as cable ties above
- Mounting hole allows wires to be bundled and secured via #10 screw
- UL Recognized
- Sold per bag of 1,000

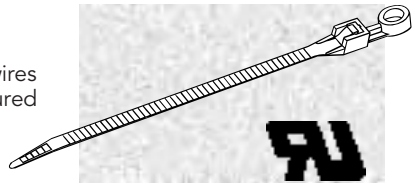

Part Number	Length	Max. Bundle Diameter	Color	Tensile Strength	Screw Size	Price per bag	L/3 Bags
90-1037-00	8"	1-3/4"	Natural	50 lbs	#10	43.75	41.55

CABLE CLAMPS

- Plastic clamps for channeling cable and wire
- Maximum operating temperature -600 F to 275° F
- Sold 100 per bag

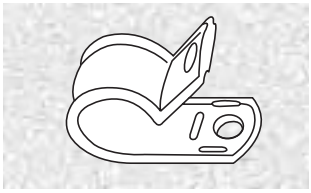

Part Number		Price per bag
90-0002-00	3/16"	7.30
90-0007-00	1/4"	7.30
90-0009-00	5/16"	7.30
90-0010-00	3/8"	7.30
90-0006-00	1/2"	7.30
90-0008-00	5/8"	7.30
90-0005-00	3/4"	7.30
90-0001-00	1"	7.30

P.C.B. SUPPORT SPACERS

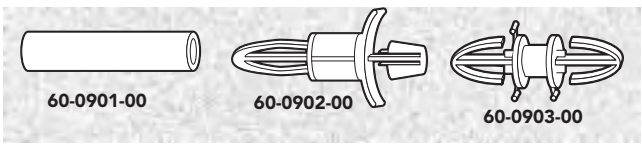

Part Number		Price per ea.
60-0901-00	7 Round Stand Off 1/4" Diameter	.55
60-0902-00	Snap-in Stand Off 1/4"	.40
60-0903-00	Board to Board Support	.39

© HAPP CONTROLS

CABLE TIE ASSORTMENT

- Patented dual locking mechanism facilitates superior locking power
- Low-profile head conserves space and reduces snagging
- Flexible nylon construction allows ease of use
- Color: Natural
- UL Recognized
- Made in the U.S.A.

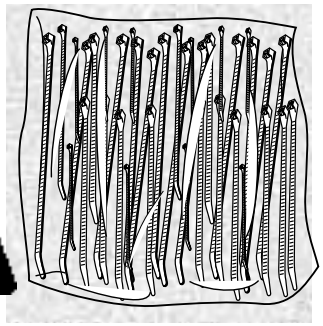

Part Number		Price per ea.	L/3
90-1030-00	Cable Tie Assortment (500 Pieces)	12.85	11.80

Assortment contains the following Cable Ties:

Qty	Size	Tensile Strength
200	4"	18 lbs
100	5.6"	30 lbs
200	7.5"	50 lbs

761-PIECE PROFESSIONAL CABLE TIE KIT

NEW

- A must for professional users
- Patented DoubleLock™ Design in 3 popular lengths – 4", 8", 11"
- Versatile tensioning tool tightens and trims ties
- Tough 6/6 nylon ties in, commercial grade 4
- Ties come in the following colors: natural, black, red, blue, yellow and green
- UV resistant black ties are the ONLY choice for outdoor use

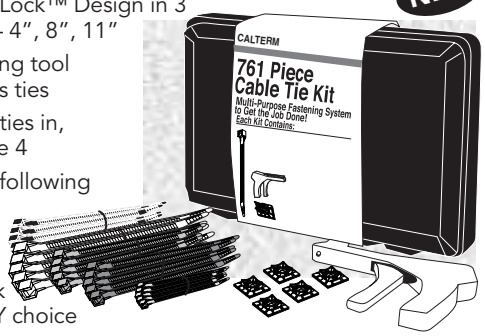

- Durable carrying case keeps ties and tensioning tool organized
- Made in the USA
- Kit includes:

  1 pistol grip tie tensioning and trimming tool

  10 self-adhesive mounting bases

  750 cable ties as follows:

300 4" Ties	400 8" Ties	50 11" Ties
25 Blue	25 Blue	50 Natural
25 Red	25 Red	
25 Yellow	25 Yellow	
25 Black	25 Green	
200 Natural	100 Black	
	200 Natural	

Part Number		Price per ea.
90-1030-01	761-Piece Professional Cable Tie Kit	36.10

MOUNTING PADS FOR CABLE TIES

- Adhesive backed to allow flexibility in mounting and securing wires and cables
- Simply peel paper backing and apply to clean dry surface
- Natural color
- Four-Way insertion - 3/4" pad
- Two-Way insertion - 1" pad
- Sold per bag of 100

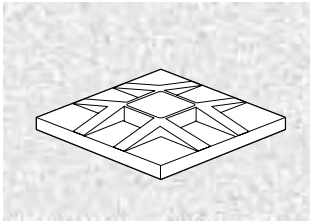

Part Number		For Use With	Price per bag	L/3 Bags
90-1031-00	3/4" x 3/4" Mounting Pad	18#, 30#	24.15	22.90
90-1032-00	1" x 1" Mounting Pad	18#, 30#, 50#, 75#	27.80	26.65

SECURE SEAL CABLE TIES

NEW

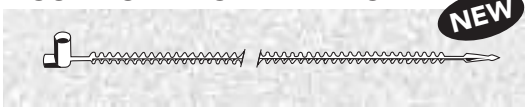

- Tamper evident head
- Ribbed design for secure closure
- Minimum loop tensile strength: 8 lbs; Maximum: 14 lbs
- Length: 8"
- Color: natural
- Made of 6/6 nylon for high impact and tensile strength
- Sold per box of 2,000

Part Number		Price per box
90-0021-00	Secure Seal Cable Ties	68.30

RIP-TIE CABLECATCH

- Organizes cables against a surface
- Anchor cords, cables and wires neatly along surfaces and out of the way
- Acrylic pressure sensitive adhesive securely attaches to equipment racks, desks, or walls.
- Peel-away backing makes the CableCatch easy to use to install.
- Soft Hold" of the CableCatches successfully maintains the integrity of the cable performance, and offer easy & reliable way to organize high performance data cable without using nylon ties.
- One quick pull of the tab releases the bundle for easy rearranging and quick equipment set-ups.
- Re-usable and environmentally friendly, no more throwing away nylon cable ties.
- Size: 1" X 4"

NEW

Part Number		Color	Price per pack
90-0060-00	Rip-Tie CableCatch, Pack of 50	Assorted	150.90
90-0079-00	Rip-Tie CableCatch, Pack of 5	Black	16.30
90-0080-00	Rip-Tie CableCatch, Pack of 50	Black	147.90

CABLE TIE MARKING PEN

- Smear proof and waterproof ink for marking on nylon surfaces
- Black ink

NEW

Part Number		Price per ea.
92-0637-00	Cable Tie Marking Pen	5.15

PROCELL® PROFESSIONAL ALKALINE BATTERIES

NEW

- Manufactured by Duracell®
- Power Pro technology delivers more power for longer life
- PROCELL® alkaline batteries provide the same performance and quality as DURACELL® batteries
- Long lasting power providing superior dependability – even after five years of storage
- Lasts up to five times longer than super heavy duty batteries
- Long service life at high drain discharges
- Operates reliably in temperature extremes of –20 degrees C to 54 degrees C
- Date coded to ensure freshness
- Contains no added mercury

DURACELL®
PROCELL®

Part Number		Price per ea.
49-6171-00	AA Alkaline Battery	.84
49-6172-00	AAA Alkaline Battery	.84
49-6173-00	C Alkaline Battery	1.30
49-6174-00	D Alkaline Battery	1.30
49-6175-00	9V Alkaline Battery	2.55

SANTRONICS AC SENSOR

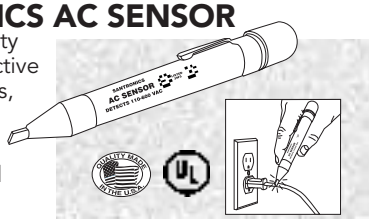

- Patented outstanding safety equipment – locates defective grounds, energized circuits, induced voltage
- Maintenance, service and electrician personnel need this tool daily!
- Fits in shirt pocket
- Senses voltage without metallic contact
- UL listed-#39F5, tested and approved for public safety
- All outer surfaces are non-conductive for safety
- Detects 110-600 Volts AC
- Choice of OSHA
- Manufactured in the USA

Glows RED when contact is made with:
- Insulated wire with positive AC voltage
- Hot side of receptacle when voltage is present
- Each side of fuse, when checking if fuse is functional

Will not glow RED when contact is made with:
- Shielded cable
- Neutral side of wall outlet or cord (if wired correctly)

Part Number		Price per ea.
92-0281-00	Santronics AC Sensor	20.40

CLAMP-ON LAMP

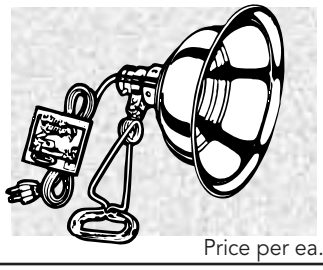

- Great portable light
- Uses standard incandescent bulb (not included)
- 5-½" reflector

Part Number		Price per ea.
49-0962-00	Clamp-On Lamp	14.50

BATTERY CHARGER

- Charges 2 or 4 AA, AAA, C, D or up to two 9 volt batteries
- 3 hour charge
- Batteries sold separately
- Nickel Cadmium batteries can be stored charged or uncharged
- Sold in packages only

Part Number		Price per ea.
49-3116-00	Battery Charger	34.35
49-0848-00	D Battery (Min. 2)	6.30
49-0849-00	C Battery (Min. 2)	7.00
49-0850-00	AA Battery (Min. 4)	3.70
49-0852-00	AAA Battery (Min. 4)	3.80
49-0851-00	9V Battery	9.90

LITHIUM BATTERIES

- Various types

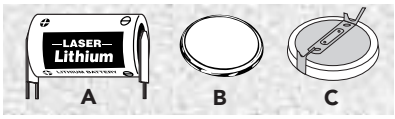

Part Number	Style	Ref. No.		Price per ea.
49-0855-00	A	MN02	Laser Lithium 3V, PC mount	9.65
27-0086-00	B	CR2025	Lithium, 3V coin cell	1.10
49-0857-00	B	CR2032	Lithium, coin cell	4.20
49-0858-00	B	BR2330	Lithium, coin cell	4.20
49-0864-00	B	CR2450	Lithium, coin cell	4.10
49-5096-01	B	CR2354	Lithium, coin cell	4.20
49-5096-00	C	BR2325-1HC	Lithium, 3V with leads	4.20
49-1273-00	C	BR2325-T2	Lithium, 3V with leads	9.40

SPECIALTY BATTERIES

- Used on MPU Boards
- Serves as memory backup for many gaming, amusement and vending applications

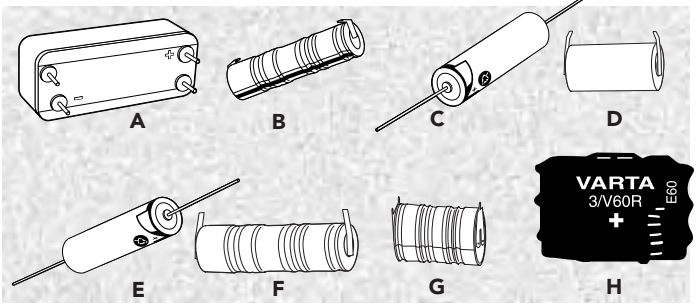

Part Number	Style	Ref. No.		Price per ea.
27-0085-00	-	357	1.5V Watch Battery	1.55
27-1032-00	A	2/V 150H	2.4V Varta Ni-Cad, with DIP pins	10.95
80-0185-00	B	100103	3.6V DC Ni-Cad, AA w/tabs	11.50
27-1002-00	C	TL2150/P	3.6V Lithium w/pigtails, 1/2AA	9.40
27-1236-00	D	TL5101/T	3.6V Lithium w/tabs, 1/2AA	9.40
27-1040-00	E	TL5104P	3.6V Lithium w/pigtails, AA	10.95
49-0856-00	F	TL5104T	3.6V Lithium w/tabs, AA	10.95
49-0861-00	G	3/V 80H	3.6V 70mah Varta w/pins	10.95
49-0860-00	H	3/V150H	3.6V 140mah Varta stacked w/pins	10.95

© HAPP CONTROLS

STREAMLIGHT STYLUS™ LED FLASHLIGHT

- 100,000 hour lifetime, high-intensity Light Emitting Diode (LED), solid state bulb
- LED available in Arctic White (12,000 millicandelas), Ice Blue (5,000 millicandelas), Green (15,000 millicandelas), or Red (16,200 millicandelas)
- 6000 series tempered aircraft aluminum, anodized finish; non-slip knurled grip
- Run time over 10 hours
- Waterproof, individually serialized, momentary "blink" switch and constant "on", pocket clip
- Weight is only 1.1 ounces with batteries
- Requires three AAAA alkaline batteries (Included)
- Color black; .38" D x 6.21"L
- Shipped with Glare Guard (49-6126-00)

Part Number		Price per ea.
49-1229-02	Streamlite Stylus™ White Led Flashlite	21.95
49-1229-05	Streamlite Stylus™ Blue Led Flashlite	21.95
49-1229-06	Streamlite Stylus™ Green Led Flashlite	22.40
49-1229-07	Streamlite Stylus™ Red Led Flashlite	22.40
49-1229-03	Replacement AAAA Batteries (Pk of 6)	7.70
49-6126-00	Glare Guard	2.00

EVEREADY INDUSTRIAL MAGNETLIGHT

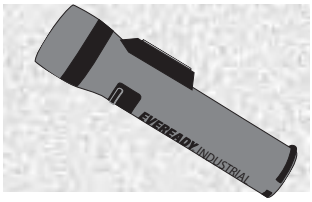

- Super bright Krypton bulb
- Performance and quality at a value price
- Ergonomically designed
- Hanger Ring
- Handy magnet lets you keep the flashlight convenient
- Easy slide switch
- Anti-roll design
- Chemical resistant
- Uses 2 D cell batteries (sold separately)
- Bright yellow color, Faceted reflector

EVEREADY

Part Number		Price per ea.
49-1218-00	Eveready Industrial Magnetlight	5.05

RAYOVAC ROUGHNECK FLASHLIGHT AA SIZE

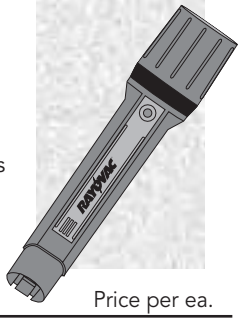

- Tough polypropylene case resists water, gas, grease, oil and impact
- Adjustable spot to flood focus
- Brighter, whiter krypton bulb
- Roughneck is the toughest, most durable flashlight that Rayovac makes
- Full lifetime warranty
- Uses 2 AA batteries (included)
- Ref # R2AA

RAYOVAC

Part Number		Price per ea.
49-5100-00	RAYOVAC Roughneck Flashlight AA Size	9.20
49-1226-00	Replacement Lamp	4.20

MINI MAGLITE FLASHLIGHTS

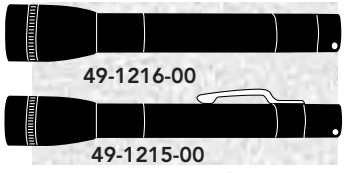

- High quality flashlights
- Batteries included
- Color: black
- 12 per box

MAG LITE

Part Number		Price per ea.
49-1216-00	AA Size	18.15
49-1215-00	AAA Size	15.45
49-5093-00	Leather Flashlight Holster	7.95
92-0227-00	Nylon Flashlight Holster	4.80

STREAMLIGHT SCORPION™ XENON FLASHLIGHT

- Compact lithium powered flashlight, only 4.9" long and weighs 4.4 oz
- Xenon gas filled bi-pin bulb provides up to 6,500 candlepower
- Triple action tail cap switch
- Variable spot to flood focus
- Rubber-armored sleeve over aluminum body
- Unbreakable polycarbonate lens
- Belt clip attachment
- Includes two long life 3 volt lithium batteries and one spare bulb
- Color: Black

Part Number		Price per ea.
49-6123-00	Streamlight Scorpion™ Xenon Flashlight	49.95
49-6125-00	Replacement 3 Volt Lithium Batteries (Pk of 2)	13.80
49-6124-00	Replacement Xenon Bulb	6.00

LIGHTWAVE 2000™ LED FLASHLIGHT

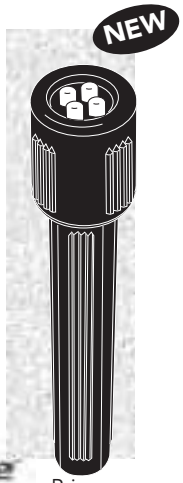

- Super-bright white light, visible for over one mile
- Solid-state Light Emitting Diodes (LEDs) do not burn out. Typical lifetime: over 11 years of continuous use
- Space-age solid-state circuitry allows a set of batteries to last 14 times longer than a regular flashlight (over 300 hours)
- Waterproof up to two feet – not just water resistant
- Shockproof up to a 10 foot drop
- 3 year warranty – does not cover the batteries or abuse
- High impact composite case
- Utilizes four high-powered super-bright white LED light sources
- Three AA alkaline batteries are included
- Twist flashlight head for easy on/off
- Size: 1.25" D x 7" L

Lightwave

Part Number		Price per ea.
49-6119-00	Lightwave 2000™ LED Flashlight with White LED	29.95
49-6119-11	Lightwave 2000™ LED Flashlight with Blue LED	29.95
49-6119-10	Nylon Flashlight Holder with Belt Clip	15.10

LIGHTWAVE 2100™ LED FLASHLIGHT

- Super-bright white LED, visible for over one mile
- Solid-state Light Emitting Diodes (LEDs) last thousands of hours
- Space-age solid-state circuitry allows a set of batteries to last 14 times longer than a regular flashlights
- Water resistant, designed for use in all weather conditions
- Shockproof – withstands a drop from 4 feet onto concrete
- 3 year warranty – does not cover the batteries or abuse
- High impact composite case
- Utilizes four high-powered super-bright white LED
- Three AA alkaline batteries are included
- Industrial grade switch, rated for 10,000 easy on/off operations
- Size: 1.25" D x 7" L

Lightwave

Part Number		Price per ea.
49-6119-01	Lightwave 2100™ LED Flashlight with White LED	29.95
49-6119-10	Nylon Flashlight Holder with Belt Clip	15.10

LIGHTWAVE 3000™ LED FLASHLIGHT

NEW

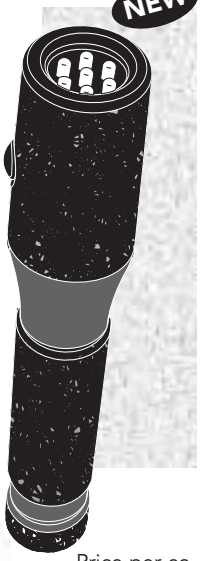

- Super-bright white light, visible for over one mile
- Solid-state Light Emitting Diodes (LEDs) do not burn out. Typical lifetime: over 11 years of continuous use
- Space-age solid-state circuitry allows a set of batteries last up to over 25 days of continuous use
- Water resistant – designed for use in all weather conditions
- Shockproof up to a 4 foot drop
- 3 year warranty – does not cover the batteries or abuse
- High impact composite ABS plastic case with genuine rubber over-molding
- Utilizes seven high-powered super-bright white LED light sources
- Three C cell batteries required (sold separately)
- Push button for easy on/off
- Industrial grade switch, rated for 10,000 on/off operations
- Size: 1-5/8" D x 8-3/4" L

Lightwave

Part Number		Price per ea.
49-6118-00	Lightwave 3000™ LED Flashlight	49.95
49-6118-10	Belt Holder For Lightwave 3000™	8.15

HAPP CONTROLS ASPEN ELITE LED FLASHLIGHT

NEW

- Extremely bright white LED packed conveniently in a small package. Clip it to your key chain or anywhere else you need light
- Brilliant White LED Crystal produces a high efficiency, non-deteriorating, solid state beam with even light distribution (no hot spots)
- Provides soft illumination with a 180 degree viewing radius that is visible over one mile
- Programmable switch with three functions; Constant-On, Alert and SOS
- Forged Aluminum Body
- Waterproof and shockproof
- Auto Tension Tri-Ring Clip
- Lightweight, only .5 ounces!
- Size: 2.67" L x .95" W x .34" Thick
- Replaceable 6 volt battery pack (49-1831-00)
- Limited lifetime manufactures replacement warranty (not battery)
- Color: Black textured engraved with Happ Controls logo
- Custom logo versions also available

Part Number		Price per ea.
49-1830-00	Happ Controls Aspen Elite LED Flashlight	19.35
49-1831-00	6v Lithium Power Pack Replacement Battery	5.10

LIGHTWAVE 4000™ LED FLASHLIGHT

NEW

- Super-bright white light, visible for over one mile
- Solid-state Light Emitting Diodes (LEDs) do not burn out. Typical lifetime: over 11 years of continuous use
- Space-age solid-state circuitry allows a set of batteries to last over one month of continuous use.
- Waterproof up to one foot – designed for use in all weather conditions
- Shockproof up to a 4 foot drop
- 3 year warranty – does not cover the batteries or abuse
- High impact composite ABS plastic case with genuine rubber over-molding
- Utilizes ten high-powered super-bright white LED light sources
- Three D cell batteries required (sold separately)
- Push button for easy on/off
- Industrial grade switch, rated for 10,000 on/off operations
- Size: 2" D x 10.8" L

Lightwave

Part Number		Price per ea.
49-6117-00	Lightwave 4000™ LED Flashlight	59.95
49-6117-10	Belt Holder For Lightwave 4000™	8.15

TRIDENT™ LED HEADLAMP

NEW

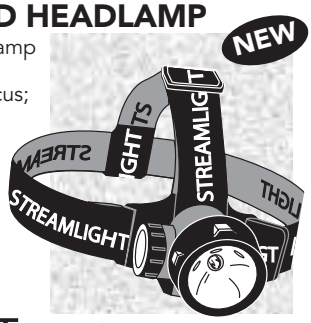

- Combination Krypton/LED headlamp
- Comfortable adjustable strap; 90° tilting head; spot-to-flood focus; 3 levels of lighting
- Up to 150 hours run time using the LED lamp
- Durable, water-resistant, with a virtually unbreakable yellow polymer body and scratch-resistant lens
- Lightweight only 5 ounces with batteries
- Requires 3 AAA alkaline batteries (49-6172-00)
- 2" D x 2" H x 2.75" L

TRIDENT™

Part Number		Price per ea.
49-1229-01	Trident™ LED Headlamp	36.95

EVEREADY POCKET PEN LIGHT

- Handy flashlight comes with pocket clip
- Durable metal case
- Long life push button switch
- Bright concentrated beam
- Eveready Ref. No. 6212-1ACS
- Uses 2 AAA batteries (included)

Replacement lamp # 222

EVEREADY

- Length: 5.48"
- Shipped in assorted colors, specific colors cannot be requested

Part Number		Price per ea.
49-1217-00	Eveready Pocket Flashlight	6.25

FLASHLIGHT BULBS

- Long lasting
- High quality
- For use in various flashlight types

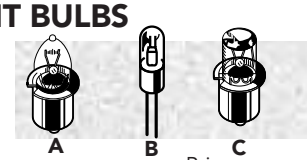

Part Number	Type	Description	Price per ea.
49-1225-00	A	For 2 D Cells (Pk. of 2)	2.00
49-1224-00	A	For 3 D Cells (Pk. of 2)	.87
49-1226-00	-	X21 Lamp (Pk. of 2)	4.20
49-1230-00	B	Mini-Maglite Bulb For AA/AAA Flashlights (Pk. of 2)	2.85
91-1125-00	C	222 Lamp	.86

© HAPP CONTROLS

FIRE VULCAN® STANDARD SYSTEM

- New! The only lantern with 2 tailight LEDs.
- New! high-visibility orange
- Waterproof
- New! 3-position toggle switch. Easy to turn on/off with gloves
- New! high-clearance handle, your gloved hand fits easily around it
- New! heavy-duty D-rings for strap connection
- New! Quick-release strap works like a seat belt
- Offers 2 modes: "steady" and "blinking"
- Compact & lightweight: weighs only 3.3 lbs.
- Extremely powerful: 65,000 candlepower
- Meets requirements of NFPA
- Rugged, high-impact thermoplastic housing

Part Number		Price per ea.
49-1926-00	Fire Vulcan® Standard System	163.15

CONTINUITY TESTER

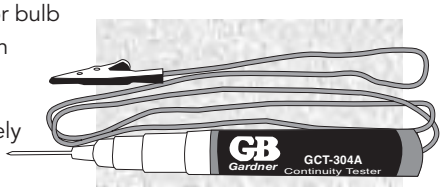

- Tests for continuity in non-energized circuits
- Fully shielded indicator bulb
- Insulated test lead with alligator clip
- Operates on 2 AA batteries sold separately
- 36" lead length
- One year warranty

Part Number		Price per ea.
49-0959-00	Continuity Tester	5.20

CIRCUIT ANALYZER AND RECEPTACLE TESTER

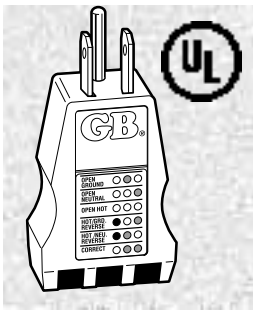

- Neon indicators give positive indication of circuit status
- Compact unit simply plugs into any standard 3-wire / grounded receptacle (110-125V AC circuits)
- Tests for 6 circuit conditions: open ground, open neutral, open hot, hot/ground reverse, hot/neutral reverse and correct wiring
- Succession of yellow and red lights provide indication of circuit status or specify which wire is defective
- Easy to read 3 views – top, side and bottom
- Will not normally trip GFCI

Part Number		Price per ea.
49-0958-00	Circuit Analyzer and Receptacle Tester	8.35

HI-VOLTAGE TESTING SCREWDRIVER

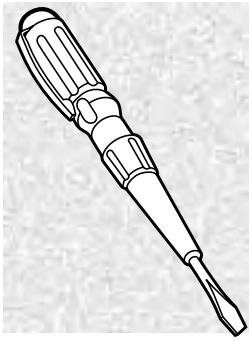

- Combination screwdriver & electrical tester that checks AC voltages from 100 to 500 volts
- Pocket sized, only 9/16" O.D. and 5-5/16" long
- Simple yet effective in tracing all types of trouble such as grounding lines, open or short circuits
- Instantly tests 110 & 220 volt outlets, fuses and extension cords
- Pushbutton activated light in handle, convenient pocket clip

Part Number		Price per ea.
91-1171-00	Hi-Voltage Testing Screwdriver	4.30

INTERLOCK SWITCHES

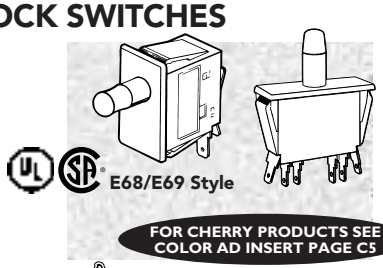

- E68-00A SPDT, 0.1 amp
- E68-01A SPST, 0.1 amp
- E69-00A SPDT, 10 amp
- E69-30A SPDT, 10 amp
- E78-00A DPDT, 0-1 amp
- E78-40A DPDT, 0.1 amp
- E79-00A DPDT, 10 amp
- E79-30A DPDT, 10 amp
- E79-40A DPDT, 10 amp
- UL/CSA Listed

FOR CHERRY PRODUCTS SEE COLOR AD INSERT PAGE C5

CHERRY

Part Number		Price per ea.	L/25
53-7031-00	Interlock Switch, E68-00A	3.60	3.30
53-7025-00	Interlock Switch, E68-01A	3.60	3.30
53-7020-00	Interlock Switch, E69-30A	3.60	3.30
53-7011-00	Interlock Switch, E79-00A	5.15	4.80
53-7010-00	Interlock Switch, E69-00A	7.10	6.75
53-7032-00	Interlock Switch, E78-00A	6.25	5.15
53-7026-00	Interlock Switch, E78-40A	10.70	9.60
53-7030-00	Interlock Switch, E79-30A	5.15	4.80
53-7028-00	Interlock Switch, E79-40A	5.25	4.90
42-0578-00	Bracket for E68 & E69 Interlock Switches	1.60	1.50

SWITCH HOLDER

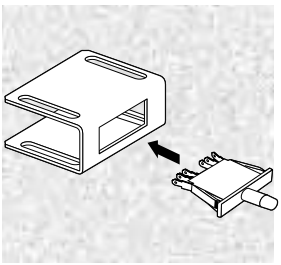

- Specially designed bracket to hold Cherry E7 series switches
- Protects switch from damage
- Switch easily snaps into holder
- Easy adjustable mounting
- Made from heavy duty 16-gauge steel
- Uses # 10 screws
- Switch not included

Part Number		Price per ea.	L/100
42-8061-00	Drop Door Switch Holder	2.45	2.10

BRACKET ASSEMBLY WITH ON/OFF TOGGLE SWITCH

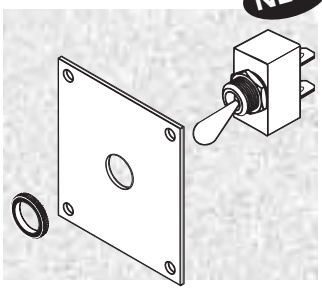

- Pre-assembled for easy installation
- Plate is pre-drilled with four mounting holes
- Overall plate dimensions: 2.25" x 2.50"
- .250" terminals
- UL/CSA listed
- Two versions available for your convenience

Part Number		Price per ea.
49-5259-00	Bracket Assembly with ON/OFF Toggle Switch SPST, 20 amp, 125v, .250" terminals	5.20
49-5259-10	Bracket Assembly with ON/OFF Toggle Switch DPST, 20 amp, 125v, .250" terminals	6.60

TOGGLE SWITCHES

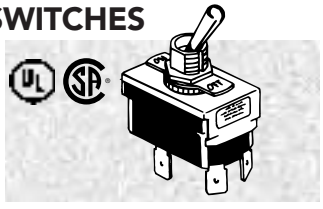

- .250 terminal
- 1/2" mounting hole
- UL/CSA listed

Part Number		Amps	Volts	Price per ea.
H9984622N	Single Pole Double Throw	20	125	13.05
49-0005-00	Double Pole Single Throw	20	125	4.85
49-0031-00	Single Pole Single Throw	20	125	4.40

FOR CHERRY PRODUCTS SEE COLOR AD INSERT PAGE C5

SINGLE OR DOUBLE POLE SWITCHES

- .250 terminals
- 125 or 250 volt
- 15 Amp

CHERRY

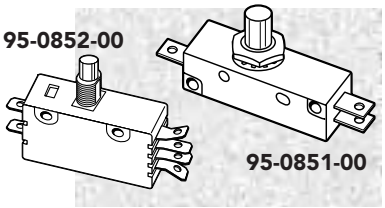

Part Number		Ref. No.	Price per ea.
95-0852-00	Single Pole Door Switch	E13	6.25
95-0851-00	Double Pole Door Switch	E19-00M	8.80

COIN SWITCHES

- Available with straight wire or custom bend to fit specific applications

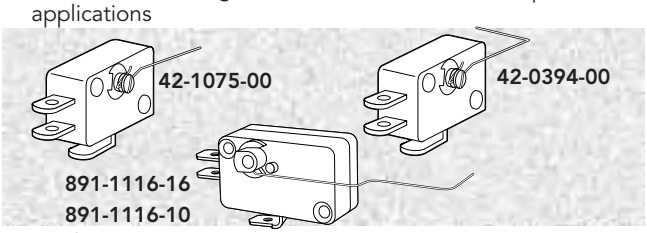

Part Number		Price per ea.	L/100
42-1075-00	Coin Switch Assembly w/straight wire	3.40	2.85
42-0394-00	Coin Switch Assembly w/Bend for Happ Coin Doors	3.60	3.05
891-1116-10	Coin Controls Coin Switch with Formed Actuator, Red	4.45	3.95
891-1116-16	Coin Controls Coin Switch with Formed Actuator, Black	4.45	3.95
42-7087-00	Coin Switch Assembly Crouzet .250 Terminal	4.30	3.75

COIN SWITCH WITH WIRE

- .187 quick connect terminals
- High Cherry quality
- 125 Volt

CHERRY

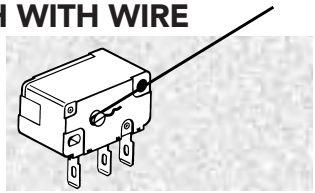

Part Number	Description	Cherry No.	Amps	Price per ea.	L/25
42-0105-00	White Dot	E51-39RA	6	4.60	3.80
42-0315-00	White Dot (Vertical Leads)	E53-78R	.01	6.40	5.85
42-0312-00	Blue Dot	E53-82R	.01	5.10	4.60

COIN SWITCH WIRE AND RETAINER

CHERRY

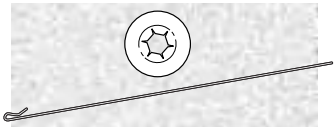

Part Number		Price per ea.
42-0200-00	3-¼" Hair Clip Style Wire	.23
95-4186-00	Wire Retainer (Push Nut)	.15

WATERPROOF SNAP SWITCH

- Waterproof and dust proof
- 5 amps
- 125/250 Volts
- .110 terminals

CHERRY

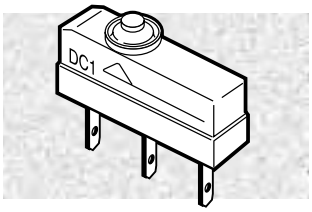

Part Number		Price per ea.	L/100
95-0863-00	Waterproof Snap Switch	2.15	1.90

LONG ARM SWITCH WITH ROLLER ACTUATOR

- 10 amps
- 125/250 volts
- .250 terminals

CHERRY

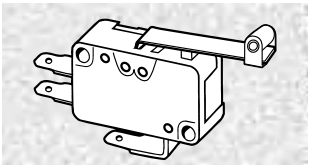

Part Number		Price per ea.	L/12
50-8018-20	Long Arm Switch w/Actuator	4.30	3.70

SNAP SWITCHES

- High Cherry quality switch
- 75 gram (standard) actuating force
- .187" or .250" terminal available

CHERRY

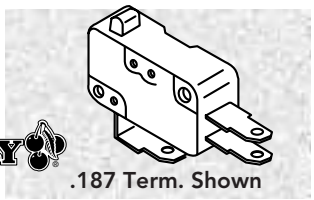

Part Number	Type	Terminals	Amps	Price per ea.	L/100
95-0733-01	D44	.187"	10	.91	.86
95-4114-00	D41	.187"	0.1	3.15	2.55
95-4111-00	D44	.250"	10	.91	.86
95-4115-03	D41	.250"	0.1	3.15	2.55

MINIATURE SNAP SWITCHES

- Used for VLT buttons
- .110 terminals
- 125 volts

CHERRY

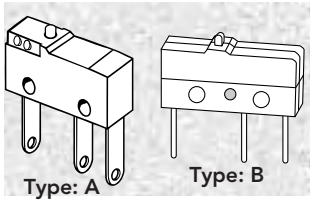

Part Number	Ref. No.	Amps	Actuator	Type	Contacts	Price per ea.
95-4117-00	DA3CBWBA	0.1	Green	A	Gold	3.15
95-4118-00	DA3ABWDD	0.1	White	A	Gold	3.15
95-4139-00	E62-30A	10	Red	B	Silver	2.50

SWITCHES WITH ACTUATOR

- .250 terminal
- 1-1/2" actuator

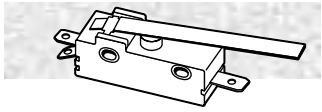

Part Number	Ref. No.	Amps	Volts	Price per ea.
42-0096-00	E-13-00H	15	125/250	3.30
42-0330-00	G-13-00H	0.1	125	9.75

MOMENTARY SWITCH

- Normally Open
- Single pole single throw
- 3 amp, 125 volt
- 1 amp, 250 volt
- 1/2" mounting hole

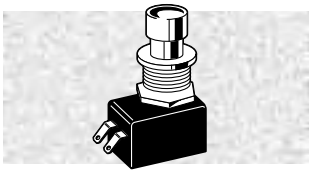

Part Number		Price per ea.
95-0845-00	Momentary Switch	7.30

ON-OFF BUTTON

- Push-on push-off (Latching)
- Red button cap
- 1/2" x 1/2" square
- 1-1/2" long
- 3 amp, 250 volt
- .110 terminal

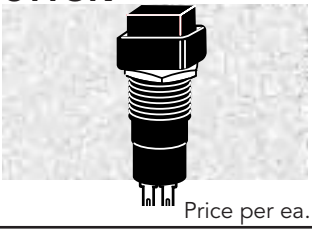

Part Number		Price per ea.
95-0842-00	On/Off Button	2.50

© HAPP CONTROLS

MINI-SNAP SWITCH WITH ROLLER ACTUATOR

- Roller actuator
- .110 terminals
- 0.1 amp 125 volt
- High Cherry quality
- Ref. No. E63-30K

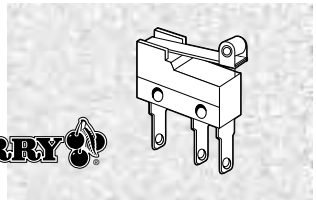

Mounting Dimensions

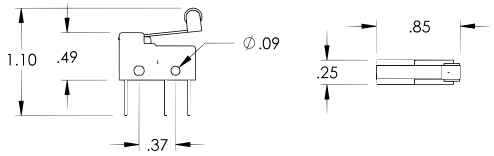

Part Number		Price per ea.	L/100
95-4138-00	Mini-Snap Switch With Roller Actuator	3.75	3.40

SNAP SWITCHES WITH ROLLER ACTUATORS

- 10 amps
- 125volts
- .187 terminals

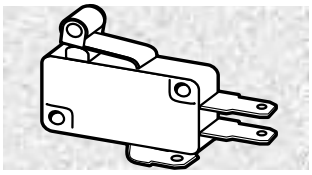

Mounting Dimensions

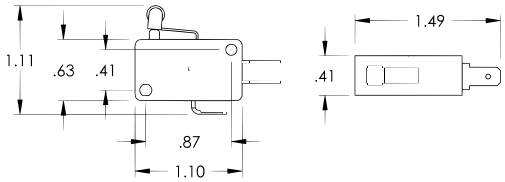

Part Number		Price per ea.
95-0846-00	Snap Switch with Roller Actuator	5.30

SNAP SWITCHES WITH STRAIGHT ACTUATORS

- 10 Amps
- 125 Volts
- .187 terminals

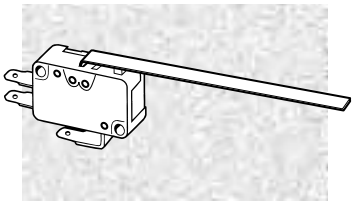

Mounting Dimensions 95-0735-00

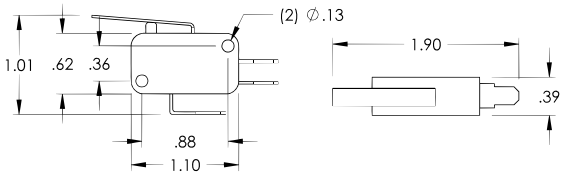

Part Number		Price per ea.
95-0735-00	1" Long Actuator	2.85
95-4214-00	3" Long Actuator	1.70

Mounting Dimensions 95-4214-00

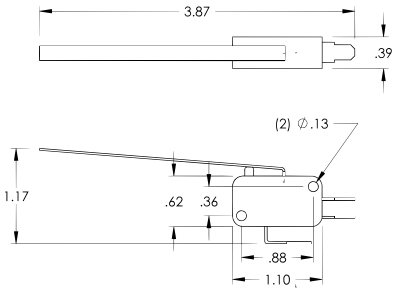

MINI-SNAP SWITCHES WITH ACTUATOR

- Fit All Recent Pinball Games
- 3" long actuator
- 0.1 amp, 125 volts
- .110 terminals

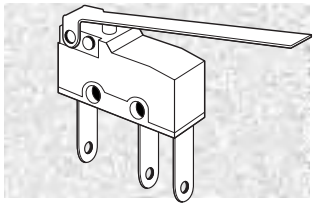

Mounting Dimensions 95-4183-00

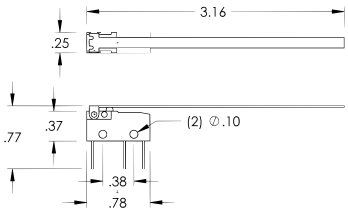

Part Number		Price per ea.	L/100
95-4183-00	Mini-Snap Switch w/Flat Actuator	3.25	2.55
95-4170-00	Mini-Snap Switch w/Wire Actuator	3.25	2.55

FOR CHERRY PRODUCTS SEE COLOR AD INSERT PAGE C5

SWITCHES WITH ACTUATORS

- Made with GOLD contact CHERRY switches for long reliable service
- Two types available: "Miniature" D4 series "Subminiature" DA3 series
- Fit most applications on recent pinball games
- OEM applications – Custom designed switches also available, please inquire

CHERRY

SUBMINIATURE SWITCHES

95-4141-00

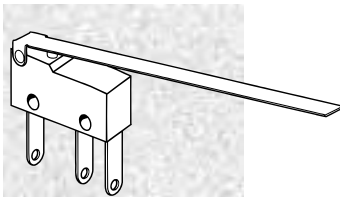

Mounting Dimensions 95-4141-00

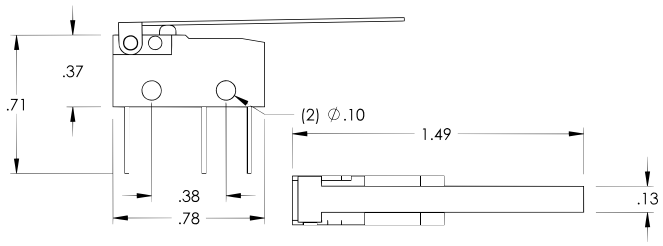

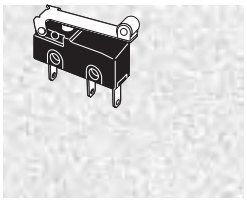

95-4142-00

Mounting Dimensions 95-4142-00

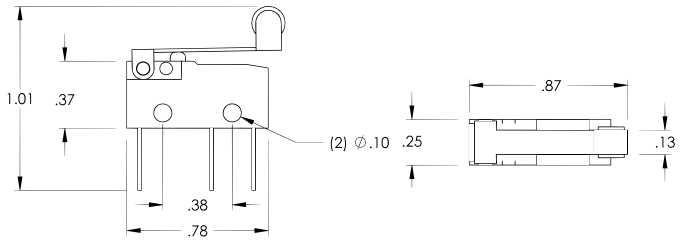

Part Number		Price per ea.	L/25
95-4141-00	Door Switch	3.25	2.95
95-4142-00	Validator Door Switch	3.50	3.10

FOR CHERRY PRODUCTS SEE COLOR AD INSERT PAGE C5

MINIATURE SWITCHES

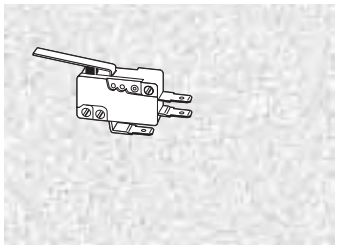

95-4177-00

Mounting Dimensions 95-4177-00

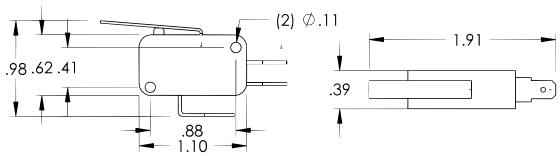

95-4155-00

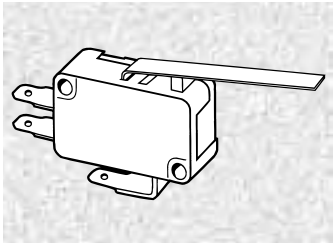

Mounting Dimensions 95-4155-00

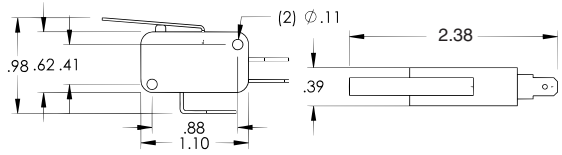

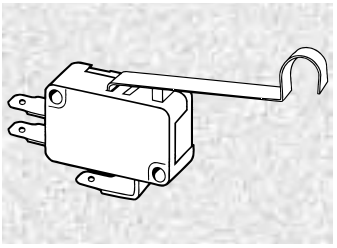

95-4152-00

Mounting Dimensions 95-4152-00

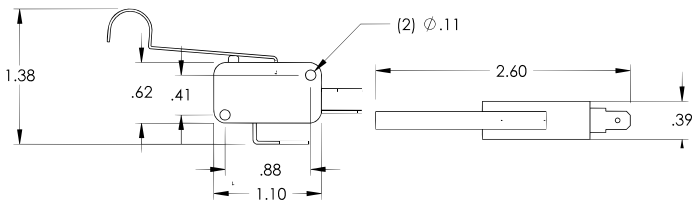

Part Number		Price per ea.	L/25
95-4177-00	Hopper Escalator Switch	3.25	2.95
95-4155-00	Hopper Escalator Switch	4.35	3.90
95-4152-00	Validator Switch	4.00	3.35

© HAPP CONTROLS

NTE SEMICONDUCTORS

NTE ELECTRONICS, INC.

- Happ Controls is now an authorized NTE distributor
- Call us for all your electronic needs

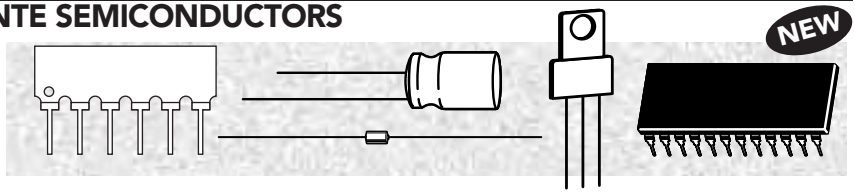

Part Number		Price per ea.
NTE11	T-NPN, Si, High Current Amp	1.70
NTE108	T-NPN, SI RF/IF/Video Amp,TO-72	.84
NTE116	R-Si, 600PRV, 1A	.81
NTE121	T-PNP, Ge, Audio Pwr Amp	17.35
NTE121MP	T-PNP, TO-3	24.98
NTE123A	T-NPN,SI-AF/RF AMP,TO-18	.75
NTE123AP	T-NPN, Si, Audio Amp, Sw	1.10
NTE125	D-Si, 1000 PRV, 2.5A	.87
NTE1288	IC-Linear, Audio Pwr Amp, 2.1W	8.30
NTE128P	T-NPN SI General Purpose Amp	1.35
NTE129P	T-PNP, Si, Gen Purpose Amp	1.65
NTE135A	Zener Diode	1.10
NTE142A	Zener Diode	.44
NTE145A	Zener Diode	.44
NTE1507	IC-Linear	8.80
NTE15030	IC-Linear	9.50
NTE15031	IC-2 Channel RF Power Amp	17.65
NTE152	T-NPN, Si, Audio, Gen Purp Amp	2.70
NTE153	T-PNP, Si, Audio, Gen Purp Amp	3.20
NTE156	R-Si, 1000 PRV, 3A	1.60
NTE159	T-PNP, Si, Low Noise Audio Amp	1.85
NTE159M	T-PNP, SI Low Noise Amp, TO-18	.58
NTE161	T-NPN, SI Video IF AMP, TO-72	1.31
NTE169	R-Si, Bridge, 600 PRV, 2A	3.70
NTE172A	T-NPN SI Darlington Amp	1.05
NTE177	D-Si, Gen Purpose, 200 PRV	1.25
NTE1773	IC-Linear, Vert Defl Output	3.50
NTE1777	IC-Linear, TV, Fixed Vltg Reg,	14.35
NTE1782	IC-TV Vert Def/Output Ckt	5.25
NTE1788	IC-Linear, Vert Defl., Output	6.85
NTE1797	IC-Linear	3.57
NTE1855	IC-Linear, IF Amp	3.80
NTE1862	IC-Linear, Vertical Defl	6.85
NTE1917	IC-Vltg Reg, Neg, -5V, 100mA	3.75
NTE1934X	IC Volt Reg, POS 5V, 2A, TO-3P	7.20
NTE1960	IC-Vltg Reg, Pos, 5V, 1A, Isol Tab	3.65
NTE2013	IC-7-Channel Darlington	4.00
NTE2014	IC-7-Channel Darlington	4.95
NTE2018	IC-8-Channel Darlington	3.90
NTE2114	IC-NMOS, 4K Static Ram, 300ns	13.40
NTE219MCP	Transistor	6.25
NTE232	T-PNP, Si, Darlington Amp	1.20
NTE2324	T-NPN, Si, High Voltage Switch	10.10
NTE2329	T-PNP, Si, Audio Pwr Output	6.80
NTE2331	T-NPN, Si, Horiz, Defl	7.75
NTE2337	T-NPN, Si, High Vltg,	11.15
NTE2344	T-PNP, Si, Darlington Audio Amp	2.50
NTE2353	T-NPN, Si, Horiz Defl Output	6.80
NTE2354	T-NPN, Si, High Vltg, Horiz. Out.	8.46
NTE2362	T-NPN, Si, High Speed Switch	1.30
NTE2365	T-NPN,SI HORIZ OUT,TO-3P	15.03
NTE2371	MOSFET-P-Ch	8.15
NTE2379	MOSFET-N-Ch	4.85
NTE2382	MOSFET-N-Ch	5.30
NTE2383	MOSFET,P-CH,TO-220	5.08
NTE2385	MOSFET-N-Ch	7.25
NTE2388	MOSFET-N-Ch	8.60
NTE2389	MOSFET-N-Ch	4.85
NTE2395	MOSFET-N-Ch	5.30
NTE2396	MOSFET-N-Ch	5.55
NTE2397	Mosfet-PWR N-Chain, TO-220	5.80
NTE2398	MOSFET-N-Ch	4.45
NTE24	T-NPN, Si,Sw, Gen Purpose Amp	1.85
NTE2408	T-NPN, Si, Low Noise, Driver	2.25
NTE2501	T-NPN, Si, HV for Video Output	2.55
NTE2508	T-NPN, Si, Video Output for HDTV	1.80
NTE254	T-PNP, Si, Darlington Pwr Amp	2.95
NTE262	T-PNP, Si, Darlington Pwr Amp	3.00
NTE287	T-NPN, Si, Gen Purp	1.20
NTE289	T-NPN, Si, Audio Pwr Amp & Sw	1.50
NTE289A	T-NPN, SI-AF Power Output TO-92	1.55
NTE290	T-PNP, Si, Audio Amp & Sw	1.50
NTE290A	T-PNP, Si, Audio Amp & Sw	1.30
NTE291	T-NPN, Si, Gen Purpose Amp	3.75
NTE292	T-PNP, Si, Gen Purp Amp	3.95
NTE3041	Optoisolator, NPN Transistor	2.40
NTE3043	Optoisolator, NPN Transistor	3.50
NTE3047	Optoisolator, TRIAC Output	3.50
NTE3049	Optoisolator, TRIAC	6.75
NTE3084	Optoisolator, FET Output	2.80
NTE3094	IC Opto Coupler Duall TTL Output	18.90
NTE3098	Opto-Isolator Transistor Output	2.45
NTE332	T-PNP, Si, Audio Pwr Amp, Sw	3.95
NTE373	T-NPN, Si, Audio Amp & Driver	2.25
NTE375	T-NPN, Si, Vertical Deflection,	3.30
NTE377	T-NPN, Si, Pwr Amp, Driver, Sw	3.50
NTE378	T-PNP, Si, Pwr Amp, Driver, Sw	3.75
NTE382	T-NPN, Si, Audio Driver	2.55
NTE383	T-PNP, Si, Audio Driver	2.60
NTE398	T-PNP, Si, Vertical Deflection	3.60
NTE399	T-NPN,SI-VIDEO OUTPUT, TO-92	1.95
NTE4001B	IC-CMOS, NOR Gate	.56
NTE40106B	IC-CMOS, Hex Schmitt Trigger	1.50
NTE4021B	IC-CMOS Shift Register	3.95
NTE4024B	IC-CMOS, Binary Counter	3.50
NTE4030B	IC-CMOS, Exclusive OR Gate	1.50
NTE4049	IC-CMOS, Hex Buffer/Converter,	1.55
NTE4071B	IC-CMOS, Quad 2-Input, OR Gate	.96
NTE4081B	IC-CMOS, AND Gate	.77
NTE4093B	IC-CMOS, Schmitt Trigger	1.30
NTE46	T-NPN, Si, Darlington,	2.25
NTE466	JFET, N-Ch, Chopper/Sw	3.35
NTE47	T-NPN, Si	1.35
NTE490	MOSFET, N-Ch	.97
NTE4900	Zener Diode	2.75
NTE4901	Zener Diode	6.75
NTE4934	Zener Diode	2.95
NTE5004A	Zener Diode	.87
NTE5015A	Zener Diode, 7.5V	.78
NTE5016A	Zener Diode, 8.2V, 1/2 W	.87
NTE5019A	Zener Diode, 10V, 1/2W	.87
NTE5020A	Zener Diode, 11V, 1/2W	.87
NTE5021A	Zener Diode, 12V, 1/2W	.87
NTE5027A	Zener Diode, 18V, 1/2W	.87
NTE5141A	Zener Diode	2.45
NTE5162A	Zener Diode	2.45
NTE519	D-Si, Ultra Fast Switch, 100V P, RV	1.25
NTE5312	R-Si, Bridge, 100V, 8A	3.80
NTE5320	Bridge Rectifier	3.95
NTE5324W	Rectifier-SI, Bridge, 400V, 25A	5.20
NTE5340	Rectifier-SI, Bridge, 200V, 40A	6.46
NTE5461	SCR-50 VRM, 10A, TO-220	1.95
NTE5330	R-Si, Bridge, 600V, 6A	5.20
NTE5332	R-Si, Bridge, 600V, 1A	1.85
NTE5368	SCR-High Speed, 600V, 125A	121.55
NTE54	T-NPN, Si, High Freq Dr	4.40
NTE5466	SCR-600V, 10A	4.95
NTE552	R-Si, General Purpose	1.60
NTE558	Rectifier-SI, 1500V, 1A	1.85
NTE5602	TRIAC-100Vrm	1.85
NTE5603	TRIAC-200V, 4A	2.10
NTE5608	TRIAC-400V, 8A	3.05
NTE5638	TRIAC-400V, 8A (Isolated Tab)	3.60
NTE5655	TRIAC-200Vrm	1.45
NTE574	R-SI,400V, DO-41	.39
NTE575	R-SI,1000V,1A, DO-41"	.43
NTE576	RECTIFIER-SI,400V,5AMP,35NS	1.31
NTE577	R-Si, Gen Purp, Fast Recovery	4.50
NTE580	R-Si, Gen Purp, Fast Recovery	2.90
NTE5801	R-100Prv, 3A, Axial Lead	.84
NTE5806	R-600Prv, 3A, Axial Lead	1.65
NTE585	D-Si, Schottky	1.45
NTE587	D-Si, Ultra Fast Switch	1.30
NTE588	D-Si, Ultra Fast Switch	1.95
NTE6090	R-Dual Center Tap Schottky,	8.20
NTE6240	R-Si. Dual, Center Tap	5.10
NTE6244	R-Si, Dual, Center Tap	5.80
NTE65101	IC-CMOS 1K SRAM,22-PIN DIP"	9.98
NTE66	MOSFET-POWER-N-CHAN, TO-220	4.43
NTE7039	IC-Linear, Vert Defl, Output	3.80
NTE7062	IC-Linear, CRT Display	6.05
NTE7071	IC-Linear, Dual, Full-Bridge Driver	9.05
NTE7081	IC-Linear, RGB Video Amp	12.75
NTE7085	IC-Linear, Vert Defl Output	5.25
NTE7086	IC-Linear, Sync Deflection Ckt	3.75
NTE7096	IC-Linear,Current Mode PWM Ctrl	3.60
NTE7104	IC-Linear, Vertical Defl	3.45
NTE7126	IC-Linear, Switching Regulator	14.55
NTE7400	IC-TTL, Pos NAND	.81
NTE7402	IC-TTL, Positive NOR Gate	1.10
NTE7403	IC-TTL, Input Positive NAND Gate	.76
NTE7404	IC-TTL, Hex Inverter	1.00
NTE7406	IC-TTL, Hex Inverter Buffer/Driver	1.75
NTE7408	IC-TTL, Pos AND Gate	1.30
NTE7410	IC-TTL, Pos AND Gate	.89
NTE7414	IC-TTL, Hex Schmitt Trigger	4.10
NTE7417	IC-TTL, Hex Buffer/Driver	1.55
NTE7425	IC-TTL, NIR Gate	.66
NTE7486	IC-TTL, Exclusive OR Gate	1.05
NTE74107	IC-TTL, Dual J-K Flip-Flop	1.25
NTE74121	IC-TTL, Monostable Multivibrator	2.75
NTE74125	IC-TTL, Quad Bus Buffer	1.65
NTE74126	IC-TTL, Quad Bus Buffer	1.45
NTE74161	IC-TTL, 4-Bit Binary Counter	3.60
NTE74165	IC-TTL, 8-Bit Shift Register	3.50
NTE74166	IC-TTL, 8-Bit Shift Register	3.90
NTE74174	IC-TTL, Hex D-Type Flip-Flop	3.60
NTE74175	IC-TTL, Quad D-Type Flip-Flop	3.05
NTE74HC00	IC-TTL, High Speed CMOS	.74
NTE74HC02	IC-TTL, High Speed CMOS	.65
NTE74HC08	IC-TTL, High Speed CMOS	.65
NTE74HC14	IC-TTL, High Speed CMOS	1.35
NTE74HC174	IC-TTL, High Speed CMOS	1.05
NTE74HC273	IC-TTL, High Speed CMOS	1.65
NTE74HC32	IC-TTL, High Speed CMOS	.90
NTE74HC573	IC-TTL, High Speed CMOS	1.80
NTE74HC574	IC-TTL, High Speed CMOS	1.80
NTE74LS109A	IC-TTL, Flop 16 Pin Dip	.63
NTE74LS160A	IC-TTL, Counter 16 Pin Dip	1.04
NTE74LS163A	IC-TTL, Counter 16 Pin Dip	.75
NTE74S04	IC-TTL, Inverter in Pin Dip	.78
NTE778A	IC-Linear, Dual OP Amp	4.20
NTE834	IC-Linear, Low Power, Low Offset	3.20
NTE85	T-NPN, Si, Gen Purp Amp	1.05
NTE858M	IC-Linear, OP Amp	4.05
NTE859	IC-QUAD JFET INPUT OP AMP,14-PIN DIP	2.37
NTE891M	IC-Linear, Dual Audio OP Amp	1.80
NTE918	IC High Speed PREC. OP Amp	3.00
NTE919D	IC-Linear, Dual Comparator	5.05
NTE922M	IC-Linear, Voltage Comparator	2.75
NTE933	IC-POS VR, 12V, 5A, TO-3	27.52
NTE928M	IC-Linear, Dual OP Amp	3.50
NTE928S	IC-Linear, Dual OP Amp	2.40
NTE943M	IC-Linear, Low Power, Low Offset	2.23
NTE955M	IC-Linear, Monolithic Timer	2.05
NTE956	IC-Vltg Reg, Pos Adj	3.60
NTE957	IC-Vltg Reg, Neg Adj	4.20
NTE960	IC-Vltg Reg, Pos, 5V, 1A	4.15
NTE966	IC-Vltg Reg, Pos, 12V, 1A	4.40
NTE977	IC-Vltg Reg, Pos, 5V, 100ma	2.00
NTE987	IC-Linear, Quad OP Amp	2.75

85° RADIAL ELECTROLYTIC CAPACITORS

- P.C. mount type

Part Number	Volts	MF	Price per ea.
62-0150-00	6.3	1000	.67
62-0236-00	10	10	.39
62-0182-00	10	22	.10
62-0084-00	10	100	.38
62-0165-00	10	150	.72
62-0178-00	10	220	.24
62-0198-00	10	470	.35
62-0127-00	10	1000	.39
62-0156-00	10	1500	1.30
62-0166-00	10	2200	.40
62-0186-00	10	3300	.50
62-0122-00	10	4700	.91
62-0282-00	15	1	.40
80-0129-00	16	10	.53
62-0083-00	16	22	.62
80-0122-00	16	47	.56
62-0088-00	16	100	.96
62-0089-00	16	220	1.20
62-0200-00	16	330	.72
62-0409-00	16	330	.12
62-0090-00	16	470	.22
62-0206-00	16	680	.61
62-0001-00	16	1000	.29
62-0284-00	16	1200	1.35
62-0205-00	16	2200	4.30
80-0107-00	16	3300	3.95
62-0208-00	16	4700	7.65
62-0202-00	16	6800	5.55
62-0129-00	16	10000	.68
62-0231-00	25	0.22	.72
62-0091-00	25	2.2	.56
62-0092-00	25	3.3	.56
62-0093-00	25	4.7	.56
62-0094-00	25	10	.44
80-0126-00	25	22	1.20
62-0096-00	25	33	.71
62-0075-00	25	47	.62
62-0267-00	25	68	.41
62-0138-00	25	100	.08
62-0397-00	25	120	1.20
62-0130-00	25	220	.87
80-0117-00	25	220	.86
62-0211-00	25	330	1.45
80-0111-00	25	470	1.15
62-0157-00	25	1500	1.60
62-0123-00	25	2200	4.35
62-0187-00	25	3300	1.20
62-0112-00	25	4700	4.15
62-0203-00	25	6800	5.75
62-0153-00	25	15000	7.20
62-0101-00	35	10	.99
62-0183-00	35	22	.18
62-0195-00	35	35	.16
80-0137-00	35	47	1.20
80-0193-00	35	100	3.50
80-0114-00	35	330	1.15
62-0321-00	35	390	2.35
62-0218-00	35	470	1.40
62-0073-00	35	680	.59
80-0109-00	35	1000	2.65
80-0106-00	35	2200	2.85
62-0221-00	35	3300	6.00
62-0197-00	35	4700	3.55
62-0204-00	35	6800	6.80
62-0146-00	35	10000	11.10
62-0116-00	50	0.1	.56
62-0119-00	50	0.33	.15
62-0117-00	50	0.47	.56
62-0224-00	50	0.47	.21
80-0087-00	50	1	1.15
80-0132-00	50	2.2	.95
62-0102-00	50	3.3	.21
80-0088-00	50	3.3	.47
80-0130-00	50	4.7	.47
80-0128-00	50	10	.38
80-0103-00	50	22	.71
80-0123-00	50	47	.47
80-0118-00	50	100	.67
80-0148-00	50	220	1.30
80-0113-00	50	330	1.55
62-0018-00	50	470	.87
80-0078-00	50	470	1.90
62-0354-00	50	560	3.70
80-0108-00	50	1000	2.40
62-0114-00	50	2200	5.90
62-0189-00	50	3300	4.70
80-0086-00	50	4700	4.85
80-0101-00	60	22	1.45
62-0115-00	63	0.10	.21
62-0185-00	63	3.3	.18
62-0479-00	63	4.7	.56
62-0144-00	63	10	.47
62-0184-00	63	22	.15
62-0480-00	63	47	1.05
80-0120-00	63	100	.84
62-0180-00	63	220	.72
62-0193-00	63	330	.91
62-0201-00	63	470	1.20
62-0124-00	63	1000	4.10
62-0172-00	63	2200	3.00
62-0243-00	75	275	5.40
62-0120-00	80	4700	9.85
62-0289-00	100	0.1	.26
62-0290-00	100	1	.61
62-0227-00	100	2.2	.15
62-0481-00	100	4.7	.68
62-0155-00	100	10	.82
62-0271-00	100	22	.21
80-0102-00	100	47	.89
62-0300-00	100	100	1.75
62-0364-00	100	220	1.46
62-0190-00	100	330	2.05
62-0233-00	100	1000	10.75
62-0237-00	160	1	.09
62-0128-00	160	1.9	.71
62-0485-00	160	2.2	.83
62-0215-00	160	3.3	.38

Visit Our Web Site:
happcontrols.com
for **NEW** Product Updates!!

85° RADIAL ELECTROLYTIC CAPACITORS (CONTINUED)

- P.C. mount type

Part Number	Volts	MF	Price per ea.
80-0080-00	160	4.7	.71
80-0124-00	160	10	.86
62-0214-00	160	22	.44
80-0121-00	160	33	2.20
80-0079-00	160	47	2.10
62-0276-00	160	68	1.95
80-0119-00	160	100	3.40
62-0145-00	160	150	10.75
62-0213-00	160	220	4.45
80-0115-00	160	330	3.75
62-0220-00	160	470	8.00
62-0383-00	200	47	1.95
62-0068-00	200	100	1.25
62-0425-00	200	2200	4.45
62-0380-00	200	330	3.60
62-0291-00	200	470	5.90
62-0353-00	200	1200	23.00
62-0212-00	250	2.2	.15
62-0483-00	250	3.3	1.30
80-0104-00	250	4.7	1.30
80-0127-00	250	10	1.30
62-0495-00	250	22	2.40
62-0496-00	250	33	3.25
80-0096-00	250	47	4.05
62-0484-00	250	100	2.85
62-0066-00	250	150	7.95
62-0497-00	250	220	12.05
62-0299-00	250	330	14.45
62-0006-00	250	470	10.30
62-0317-00	350	4.7	1.55
80-0095-00	350	100	7.20
62-0339-00	400	68	9.50
62-0240-00	400	100	4.00
62-0398-00	400	470	7.65
62-0209-00	450	1	.79
62-0219-00	450	4.7	.64
62-0118-00	450	10	2.15
62-0210-00	450	100	9.50
62-0308-00	821	25	2.85

105° RADIAL ELECTROLYTIC CAPACITORS

- P.C. mount type
- -40° to +105° C

Part Number	Volts	MF	Price per ea.	L/100
62-0084-105	10	100	.14	.11
62-0183-105	10	1000	.55	.43
62-0079-105	10	1500	1.60	1.25
62-0184-105	10	1800	1.75	1.40
62-0027-105	10	2200	1.20	.93
80-0129-105	16	10	.25	.19
62-0083-105	16	22	.28	.28
62-0150-105	16	33	.21	.18
80-0122-105	16	47	.22	.18
80-1159-105	16	220	.67	.58
62-0420-105	16	270	1.50	1.15
80-1162-105	16	330	.43	.32
80-1163-105	16	470	.29	.29
80-1160-105	16	1000	.49	.41
62-0185-105	16	1500	1.55	1.20
80-1161-105	16	2200	.87	.61
62-0416-105	16	3300	1.35	1.05
62-0287-00	16	6800	9.50	7.40
62-0195-105	16	10000	12.75	9.95
62-0115-105	25	4.7	.21	.21
62-0094-105	25	10	.44	.34
62-0487-105	25	15	.26	.24
62-0110-105	25	22	.09	.07
62-0187-105	25	35	4.05	3.15
62-0075-105	25	47	.39	.37
62-0097-105	25	100	.43	.39
62-0156-105	25	150	1.45	1.35
80-0117-105	25	220	.53	.49
62-0403-105	25	270	1.80	1.40
80-0111-105	25	470	.37	.26
62-0107-105	25	820	2.55	2.00
80-0110-105	25	1000	.55	.51
62-0400-105	25	1800	2.75	2.15
62-0178-105	25	2200	1.30	.99
62-0013-105	25	2500	1.50	1.15
62-0196-105	25	6800	12.75	9.95
62-0377-105	25	22000	13.85	10.75
62-0404-105	25	65000	88.60	68.90
62-0005-105	35	10	.10	.08
80-1165-105	35	22	.39	.32
62-0328-00	35	33	1.05	.82
80-1166-105	35	47	.39	.32
62-0407-105	35	68	.51	.40
80-0193-105	35	100	.20	.16
62-0467-105	35	150	.73	.71
62-0325-00	35	180	2.00	1.55
62-0130-105	35	220	.30	.22
62-0413-105	35	220	2.40	1.85
62-0125-105	35	330	.59	.49
62-0218-105	35	470	.48	.34
62-0327-00	35	560	1.05	.81
62-0181-105	35	680	1.10	.84
80-0109-105	35	1000	.54	.54
80-0106-105	35	2200	2.00	1.90
80-1224-105	35	4700	5.25	5.05
62-0378-105	35	15000	12.65	9.85
62-0116-105	50	0.1	.36	.29
62-0117-105	50	0.47	.36	.29
80-0087-105	50	1	.32	.28
80-0132-105	50	2.2	.15	.12
62-0109-105	50	3.3	.33	.28
80-0130-105	50	4.7	.58	.41
62-0047-00	50	5.6	.61	.48
80-0128-105	50	10	.32	.27
62-0018-105	50	22	.13	.10
62-0169-00	50	33	.16	.13
80-0123-105	50	47	.22	.17
62-0371-105	50	68	.92	.71
80-1167-105	50	100	.22	.17
80-0148-105	50	220	.32	.29
80-0113-105	50	330	.79	.79
62-0375-105	50	470	.62	.49
62-0468-105	50	1000	1.40	1.30
62-0114-105	50	2200	2.00	1.90
62-0390-105	50	4700	4.70	3.65
62-0373-105	63	0.10	1.25	.95
62-0188-105	63	0.47	1.05	.81
62-0189-105	63	1	1.20	.90
62-0176-00	63	4.7	.38	.30
62-0144-105	63	10	.36	.29
62-0078-105	63	22	.13	.13
62-0174-00	63	47	.23	.18
80-0120-105	63	100	.29	.25
62-0077-105	63	220	1.15	.97
62-0391-105	63	330	.74	.58
62-0376-105	63	470	1.30	.99
62-0290-105	100	1	.82	.73
62-0293-00	100	3.3	.56	.40
62-0155-105	100	10	.19	.15
80-1168-105	100	22	.39	.28
62-0151-105	100	33	.47	.37
80-0102-105	100	47	.60	.53
62-0300-105	100	100	.58	.51
62-0152-105	100	220	2.15	1.70
62-0016-105	150	22	.95	.74
62-0393-105	160	0.22	5.80	4.50
62-0128-105	160	1	.43	.37
62-0010-105	160	10	.36	.28
62-0482-105	160	22	.56	.40
80-0121-105	160	33	1.20	1.05
80-0079-105	160	47	1.10	.94
62-0129-105	160	100	1.40	.97
62-0164-00	160	150	11.90	9.25
62-0366-105	160	220	2.45	1.90
62-0177-00	160	470	25.30	19.70
62-0161-00	200	22	.58	.45
62-0028-105	200	33	1.50	1.15
62-0186-105	200	47	2.60	2.05
62-0076-105	200	82	4.20	3.30
62-0104-00	200	100	2.20	1.95
62-0469-105	200	220	2.85	2.65
62-0190-105	200	470	23.05	17.95
80-0105-105	250	1	.42	.32
80-1222-105	250	2.2	.22	.19

105° RADIAL ELECTROLYTIC CAPACITORS (CONTINUED)

- P.C. mount type
- -40° to +105° C

Part Number	Volts	MF	Price per ea.	L/100
80-0104-105	250	4.7	.58	.49
62-0158-105	250	10	.22	.19
62-0159-105	250	22	.38	.32
62-0168-00	250	33	.89	.69
80-0096-105	250	47	1.65	1.15
62-0068-105	250	100	2.25	1.80
62-0066-105	250	150	11.60	9.05
62-0402-105	250	200	2.85	2.20
62-0470-105	250	470	6.25	5.80
62-0418-105	250	100,000 (PF)	2.05	1.60
62-0166-105	350	4.7	.78	.60
62-0193-105	350	22	2.55	2.00
62-0197-105	400	2.2	1.20	.93
62-0180-105	400	68	7.45	5.80
62-0157-105	400	220	8.35	7.80
62-0179-105	400	270	17.25	13.45
62-0401-105	400	330	9.70	7.55
80-1169-105	450	2.2	.62	.53
62-0045-105	450	3.3	1.50	1.15
62-0372-105	450	180	14.55	11.30
62-0105-105	450	220	11.55	9.00
62-0471-105	450	330	7.85	7.25

AXIAL ELECTROLYTIC CAPACITORS

Part Number	Volts	MF	Price per ea.
62-0235-00	10	10	.55
63-0115-00	10	3300	.61
62-0238-00	15	1000	2.65
62-0277-00	16	10	.55
63-0111-00	16	220	1.30
80-0089-00	16	470	8.85
62-0239-00	16	1500	3.10
63-0112-00	16	2200	4.65
63-0210-00	16	6800	6.30
62-0043-00	25	33	.42
62-0049-00	25	47	.32
63-0113-00	25	100	1.30
62-0072-00	25	220	.47
63-0480-00	25	470	2.40
63-0116-00	25	1000	3.50
63-0490-00	25	2200	4.90
63-0238-00	25	4700	8.95
63-0118-00	25	6800	9.65
63-0114-00	35	10	.31
62-0255-00	35	220	.42
63-0110-00	35	220	.84
62-0256-00	35	330	.55
63-0119-00	35	330	.59
63-0117-00	35	470	.46
80-0133-00	50	470	.95
62-0266-00	50	4700	3.60
62-0223-00	100	22	1.20
62-0269-00	100	33	.96
62-0099-00	160	3.3	.67
62-0105-00	160	33	1.60
62-0273-00	160	33	2.40
62-0147-00	160	150	10.75
63-0491-00	200 vdc	270	4.90
63-0121-00	250	2.2	.64
62-0110-00	250	4.5	.96
63-0492-00	250 vdc	30	2.50
62-0108-00	350	33	3.35
62-0058-00	450	10	1.55
62-0079-00	450	10	3.75
62-0109-00	450	33	4.95

CAPACITORS

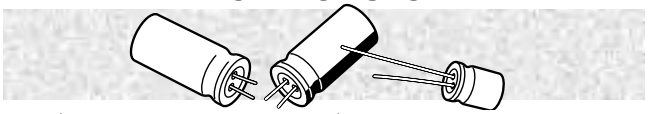

Part Number	Type	Volts	MF	Price per ea.
62-0120-00	WVDC	80	4700	9.85
62-0541-00	Tantlum	35	1.0	1.90
62-0542-00	Tantlum	35	.68	2.00
62-0543-00	Tantlum	16	2.2	.56
62-0545-00	Ceramic	25	.01	2.05
62-0546-00	Ceramic	1KV	560PFD	1.15
62-0550-00	BIPO	50	1	.82

DIODES

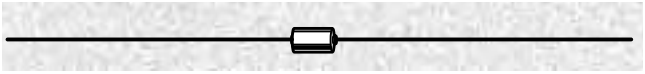

Part Number		Price per ea.
68-0450-00	1N270	.44
68-0453-00	1N4003	.28
10D-N4004-00	1N4004	.15
68-0455-00	1N4005	.36
68-0456-00	1N4148	.24
68-0467-00	1N4742A	1.20
68-0470-00	IN4937	.11
68-0460-00	1N5230B	.61
68-0457-00	1N5233B	.62
68-0458-00	1N5236B	.68
68-0459-00	1N5242B	.53
68-0466-00	1N5244B	.99
68-0454-00	1N5261B	.59
68-0468-00	1N5349A	1.75
68-0461-00	1N5349B	3.80
68-0463-00	1N5401	1.05
68-0465-00	1N5625	2.20
68-0471-00	IN5954B	.43
68-0451-00	1N914B	.44
68-0464-00	MPTE-5	5.10

TRANSISTORS

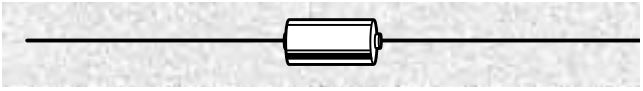

Part Number		Price per ea.
67-0430-00	295J981680	1.75
67-0407-00	2N3904	.56
67-0408-00	2N3905	.56
67-0409-00	2N3906	.56
67-0421-00	2N5062	1.20
67-0420-00	2N5064	3.05
67-0411-00	2SA562	.94
67-0419-00	2SC2344	1.20
67-0417-00	2SC3040	7.30
67-0601-00	2SC3782	3.90
67-0398-00	2SD871	10.40
67-0402-00	KN2222	.43
67-0404-00	MPS6517	.56
67-0405-00	MP56566	.56
67-0400-00	MPSA42	.56
67-0410-00	MPSA64	.56
67-0401-00	MPSA92	.56
67-0403-00	PN2907A	.94
67-0406-00	TIP125	2.15
67-0399-00	VN0104N3/FET	2.05

© HAPP CONTROLS

TRIACS

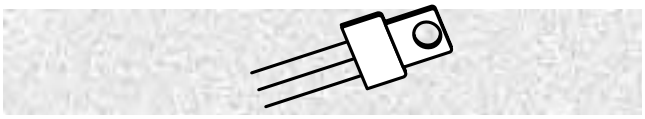

Part Number		Price per ea.
65-0237-00	2N6071A	2.85
65-0235-00	MAC15-6N	3.70
65-0234-00	Q400E3	3.00
65-0236-00	S-4015L	4.55
65-0230-00	T106A15G	2.60

RESISTOR PACKAGES

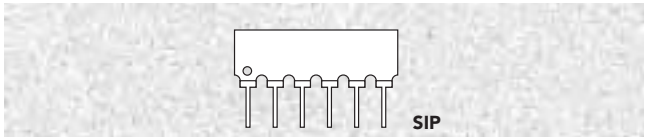

Part Number	Ohms		Price per ea.
66-0280-00	330-4	RESISTOR NETWORK, 8-Pin SIP	.43
66-0281-00	470-7	RESISTOR NETWORK, 8-Pin SIP	.43
66-0282-00	510-4	RESISTOR NETWORK, 8-Pin SIP	.43
66-0283-00	10K-9	RESISTOR NETWORK, 10-Pin SIP	.43
66-0284-00	10K	RESISTOR NETWORK, 9-Pin SIP	.53

LIGHT EMITTING DIODES

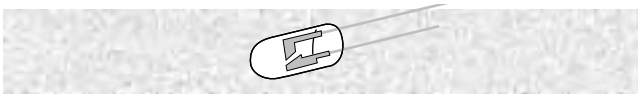

Part Number		Price per ea.
68-0560-00	Red	.50
68-0561-00	Green	.50
68-0562-00	Yellow	.50

DO YOU WANT TO KNOW EACH TIME YOUR ORDER SHIPS OUT?

e-mail notification and order **tracking information** is now available from Happ Controls! Contact your sales representative or e-mail our customer service department at: **info@happcontrols.com** with your account information.

1/4 WATT RESISTORS

- 5% Carbon Film
- Minimum Order: 10 of any one value

Part Number	Ohms	Price per ea.
66-0290-00	1.0	.15
66-0290-10	2.2	.15
66-0291-00	3.0	.15
66-0300-00	4.7	.15
66-0292-00	5.6	.15
66-0301-00	10	.15
66-0295-00	12	.15
66-0297-00	15	.15
66-0302-00	33	.15
66-0303-00	47	.15
66-0304-00	68	.15
66-0304-10	75	.15
66-0305-00	100	.15
66-0348-00	120	.15
66-0298-00	150	.15
66-0306-00	180	.15
66-0307-00	220	.15
66-0308-00	270	.15
66-0309-00	300	.15
66-0310-00	330	.15
66-0311-00	470	.15
66-0312-00	510	.15
66-0313-00	680	.15
66-0314-00	750	.15
66-0314-01	820	.15
66-0315-00	1.0K	.15
66-0316-00	1.5K	.15
66-0316-10	1.8K	.20
66-0316-20	2.0K	.15
66-0317-00	2.2K	.15
66-0318-00	2.7K	.15
66-0319-00	3.0K	.15
66-0319-10	3.3K	.15
66-0320-00	3.9K	.15
66-0321-00	4.7K	.15
66-0321-10	5.1K	.15
66-0322-00	6.8K	.15
66-0323-00	7.5K	.15
66-0324-00	8.2K	.15
66-0325-00	10K	.15
66-0326-00	12K	.46
66-0327-00	15K	.15
66-0328-00	18K	.15
66-0329-00	20K	.15
66-0331-00	27K	.15
66-0332-00	33K	.15
66-0333-00	47K	.15
66-0334-00	51K	.15
66-0335-00	56K	.15
66-0336-00	68K	.15
66-0337-00	100K	.15
66-0338-00	180K	.15
66-0339-00	220K	.15
66-0340-00	270K	.15
66-0341-00	330K	.15
66-0341-10	360K	.15
66-0342-00	470K	.15
66-0343-00	510K	.15
66-0344-00	680K	.15
66-0344-10	1 Mg	.15

1/2 WATT RESISTORS

- 5% Carbon Film
- Minimum Order: 10 of any one value

Part Number	Ohms	Price per ea.
66-0249-00	1.2	.15
66-0245-00	3.3	.15
66-0248-00	3.9	.15
66-0250-00	4.7	.15
66-0274-00	27	.15
66-0244-00	33	.15
66-0251-00	68	.15
66-0247-00	100	.15
66-0252-00	150	.15
66-0253-00	200	.15
66-0254-00	220	.15
66-0255-00	240	.15
66-0256-00	270	.15
66-0257-00	470	.15
66-0258-00	510	.15
66-0246-00	680	.15
66-0259-00	1.0K	.15
66-0275-00	1.2K	.15
66-0260-00	1.3K	.15
66-0261-00	1.5K	.15
66-0262-00	2.1K	.15
66-0263-00	2.2K	.15
66-0264-00	2.4K	.15
66-0265-00	4.7K	.15
66-0266-00	5.1K	.15
66-0267-00	10K	.15
66-0268-00	22K	.15
66-0269-00	33K	.15
66-0276-00	39K	.15
66-0270-00	82K	.15
66-0271-00	100K	.15
66-0272-00	220K	.15

1 WATT RESISTORS

- 5% Carbon Film
- Minimum Order: 10 of any one value

Part Number	Ohms	Price per ea.
66-0351-00	1.2	.20
66-0358-00	75	.43
66-0352-00	270	.20
66-0357-00	680	.26
66-0353-00	1.0K	.46
66-0381-00	1.8K	.23
66-0356-00	2.0K	.20
66-0355-00	6.8K	.20
66-0354-00	33.0	.26

2 WATT RESISTORS

- 5% Carbon Film
- Minimum Order: 10 of any one value

Part Number	Ohms	Price per ea.
66-0359-00	50	.21
66-0363-00	150	.39
66-0360-00	510	.53
66-0347-00	2400	.88
66-0362-00	12.0K	.28
66-0361-00	47.0K	.39
66-0365-00	100K	.96

INTEGRATED CIRCUITS

Part Number		Price per ea.
60-0001-01	7400	.97
60-0002-01	7404	1.20
60-0501-00	7406	.85
60-0003-01	7417	.94
60-0004-01	7474	1.05
60-0042-00	7812	1.95
80-0294-00	14066	1.65
60-0005-00	74145	1.70
60-0007-00	74174	1.50
60-0475-00	12.MHz	1.70
60-0476-00	1.8432MHz	4.30
60-0471-00	24C04	2.65
60-0506-00	27C1000DC (1 Meg)	11.55
60-0493-00	27C256	5.85
60-0504-00	27C4000DC (4 Meg)	7.00
60-0120-00	27C512 (1/2 Meg)	5.20
60-0133-00	27C64	6.75
60-0507-00	27C2000DC (2 Meg)	4.85
60-0119-00	27C256	4.85
60-0036-00	4049UB	1.40
60-0037-00	4094B	2.10
60-0038-00	4098B	2.40
60-0497-00	556	.91
60-0489-00	6264-10 8KX8	9.65
60-0071-00	6N137	1.60

Part Number		Price per ea.
60-0074-00	6N139	3.00
60-0600-00	6N139 Opto	2.75
60-0509-00	74AC04	.61
60-0027-00	74C14	1.85
80-0284-00	74C922	20.70
60-0121-00	74F139	1.05
60-0067-00	74F74	.80
60-0075-00	74HC00	.84
60-0028-00	74HC02	.75
60-0029-00	74HC04	.79
60-0102-00	74HC05	1.20
60-0076-00	74HC08	.21
60-0472-00	74HC10	1.70
60-0077-00	74HC107	1.00
60-0483-00	74HC11	.66
60-0078-00	74HC126	1.50
80-0290-00	74HC132	1.80
60-0030-00	74HC138	1.85
60-0079-00	74HC14	.23
60-0115-00	74HC154	3.80
60-0486-00	74HC157	1.05
60-0080-00	74HC161	1.20
60-0066-00	74HC163	3.55
60-0103-00	74HC165	1.95
60-0081-00	74HC166	1.80

© HAPP CONTROLS

INTEGRATED CIRCUITS (CONTINUED)

Part Number		Price per ea.
60-0082-00	74HC174	.86
60-0482-00	74HC175	1.40
60-0083-00	74HC20	1.40
60-0111-00	74HC244	.26
60-0487-00	74HC245	.43
60-0108-00	74HC273	1.55
60-0085-00	74HC32	.84
60-0484-00	74HC367	1.65
60-0031-00	74HC373	3.05
60-0106-00	74HC374	1.50
60-0481-00	74HC4020	1.30
60-0105-00	74HC4060	1.60
60-0477-00	74HC4066	1.05
60-0478-00	74HC534	2.40
60-0086-00	74HC573	1.65
60-0087-00	74HC574	1.55
60-0088-00	74HC74	.68
60-0492-00	74HCT244	1.05
60-0480-00	74HCT245	1.05
60-0095-00	74HCT93	4.55
80-0288-00	74LS00	.84
60-0009-00	74LS02	.84
60-0010-00	74LS04	1.40
60-0011-00	74LS06	1.30
60-0012-00	74LS08	.79
60-0065-00	74LS138	.77
60-0018-00	74LS139	1.20
60-0013-00	74LS14	1.30
60-0069-00	74LS155	2.50
80-0286-00	74LS174	1.20
60-0020-00	74LS221	1.85
60-0499-00	74LS244	1.05
60-0021-00	74LS245	2.25
60-0022-00	74LS253	1.40
60-0023-00	74LS257	1.20
60-0024-00	74LS259	3.20
60-0014-00	74LS27	.90
80-0179-00	74LS273	1.05
60-0015-00	74LS30	.72
80-0287-00	74LS32	.72
60-0068-00	74LS367	.88
60-0032-00	74LS374	1.50
80-0285-00	74LS393	2.25
60-0500-00	74LS540	2.25
60-0503-00	74LS541	.50
60-0017-00	74LS74	.94
49-1310-00	74LS86	3.15

Part Number		Price per ea.
60-0040-00	8035N-6	6.55
60-0130-00	80C32	3.15
60-0055-00	8T28	5.55
60-0505-00	93C46	2.40
60-0508-00	AM-29F010-120PC	7.30
60-0043-00	AM9114	8.90
60-0128-00	AY38912	24.15
60-0094-00	CD4021BE	1.30
80-0297-00	CD4027	1.65
60-0035-00	CD4040BE	2.10
80-0295-00	CD4511BE	2.50
60-0093-00	H11A1	.80
60-0091-00	HC-18/U 10 Hz	4.10
60-0090-00	ICL8211	19.50
60-0125-00	ILD-2	3.50
60-0124-00	ILQ-1	5.85
60-0123-00	ILQ-2	5.85
60-0474-00	LA7836	7.00
60-0073-00	LM317T	2.75
60-0058-00	LM319	4.00
60-0044-00	LM323K	8.85
60-0046-00	LM324	1.70
60-0048-00	LM3302	1.75
60-0057-00	LM339	1.65
60-0049-00	LM340T-5	1.95
60-0110-00	LM3900N	3.50
60-0047-00	LM393	1.40
60-0051-00	LM723	2.40
60-0109-00	MAD1108P	13.35
60-0089-00	MAX 695	21.35
60-0062-00	MC14011	2.40
60-0063-00	MC14020	2.85
60-0084-00	MC14584BCD	4.00
60-0127-00	MC14584BCP	.91
60-0061-00	MC1458CPI	4.70
60-0116-00	MC68681	16.40
60-0056-00	MOC3010	.90
60-0060-00	MOC3031	1.85
80-0291-00	MPTE12	4.05
60-0052-00	NE555	1.65
60-0053-00	NE556	1.10
60-0041-00	QSD733	1.30
60-0112-00	TDA2002	3.30
60-0097-00	TLC372CP	1.90
60-0054-00	ULN2002	2.00
60-0019-00	ULN2004	1.95
60-0059-00	ULN2068B	6.05

HAPP CONTROLS LOCK DEPARTMENT

Happ Controls now has it's own lock assembly department. We offer fast turn around on 7-pin tumbler locks. Most custom lock orders can be shipped within 48 hours. Happ locks can be keyed to your existing 7-pin tumbler key, if we receive a sample key with your order. Our 7-pin tumbler locks offer high security at a reasonable price. For your added protection, any code issued by Happ Controls can be restricted in our computer system exclusively to your company.

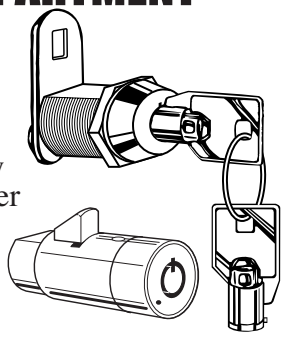

INTEGRATED CIRCUIT SOCKETS

- Low profile

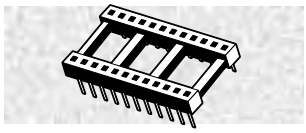

Part Number		Price per ea.	Part Number		Price per ea.
61-0006-00	6 Pin	.46	61-0022-00	22 Pin	.97
43-0926-00	8 Pin	.52	61-0024-00	24 Pin	1.05
61-0014-00	14 Pin	.65	61-0028-00	28 Pin	1.20
61-0016-00	16 Pin	.61	61-0029-00	32 Pin	1.20
61-0018-00	18 Pin	.79	43-0927-00	40 Pin	2.60
61-0020-00	20 Pin	.85			

40 PIN GROUNDED DIP EXTRACTOR

- Instant and accurate extraction
- Simply place the tool on the socket and depress the plunger
- Conductive finish with ground strap connection point

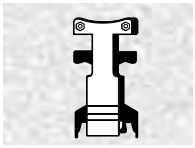

Part Number		Price per ea.
92-0253-00	40 Pin Grounded Dip Extractor	20.85

UNIVERSAL PLCC EXTRACTION TOOL

- Extracts a range of PLCC sizes from 20 pins through 84 pins from any socket without damage to the chip
- Ideal for removal of Eproms for Mars and CashCode bill validators
- Spring loaded one-hand design requires no pulling
- Simply insert into socket, squeeze handles and chip is lifted from the socket
- ABS handles and stamped steel for reliability

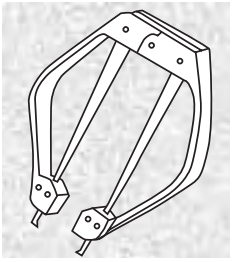

Part Number		Price per ea.
92-0267-00	Universal PLCC Extraction Tool	15.15

I.C. EXTRACTION TOOL

- Used to safely lift up I.C.'s for replacement

Part Number		Price per ea.
92-0022-00	I.C. Extraction Tool	4.90

EPROM REMOVER

- Bostitch G2K staple remover easily removes EPROMs
- Attractive chrome finish
- Size: 8-1/2" H x 3/4" L x 1-3/4" W

Part Number		Price per ea.
92-1567-00	EPROM Remover	3.05

512K BLANK CERAMIC EPROM

- New factory sealed blank EPROM for use in JCM DBV-145 and DBV-45 bill validators
- Quality STMicroelectronics brand
- 90 nanosecond programmable EPROM
- 512 Kbit (64Kb x 8)
- M27C512-90F1 UV erasable
- Stock up today so you are ready for the Next Gen currency updates
- Shipped in anti-static tubes
- Sold in lots of 13, min order 13

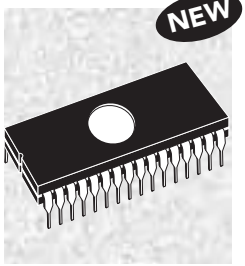

Part Number		Price per ea.
60-0257-00	512K Blank Ceramic EPROM	1.75

1 MEG BLANK CERAMIC EPROM

- New factory sealed blank EPROM for use in JCM WBA-11 and WBA-21 bill validators
- Quality STMicroelectronics brand
- 70 nanosecond programmable EPROM
- 1Mbit (128Kb x 8)
- M27C1001-70F1 UV erasable
- Stock up today so you are ready for the Next Gen currency updates
- Shipped in anti-static tubes
- Sold in lots of 12, min order 12

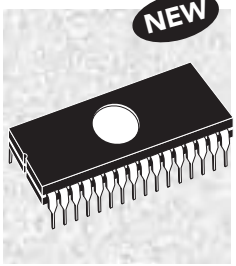

Part Number		Price per ea.
60-0258-00	1 Meg Blank Ceramic EPROM	2.20

4 MEG BLANK CERAMIC EPROM

- New factory sealed blank EPROM for use in JCM WBA-13 and WBA-23 bill validators
- Also used in JCM DBV-200 heads: B1, A3 and B5
- Quality STMicroelectronics brand
- 80 nanosecond programmable EPROM
- 4 Mbit (512Kb x 8)
- M27C4001-80XF1 UV erasable
- Stock up today so you are ready for the Next Gen currency updates
- Shipped in anti-static tubes
- Sold in lots of 12, min order 12

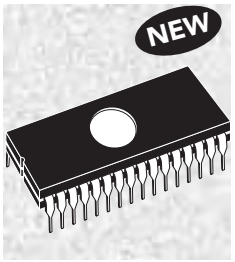

Part Number		Price per ea.
60-0256-00	4 Meg Blank ceramic EPROM	5.00

PROFESSIONAL ELECTRONIC TOOL KIT

Kit Includes:
13 Assorted screwdrivers, 6 Assorted precision screwdrivers, Brush, Mini-drill set, Utility knife, IC extractor, Vice, Electrical tape, Flashlight, Anti-static strap, Soldering iron & stand, Assorted pliers, Digital multimeter, Solder , 6" stainless scissors, Folding hex wrench, 8" lineman's pliers, 6" tweezers, Mini-vacuum cleaner, Desoldering pump, 6" adjustable wrench, All-in-one crimper, Voltage test screwdriver, Components box, 5 pc. file set, Removable pallets, 10 pc. mini-wrench set, Tool carrying case

Part Number		Price per ea.
92-0345-00	Professional Electronic Tool Kit	249.99

© HAPP CONTROLS

ANTI-STATIC PRECISION TOOL KIT

NEW

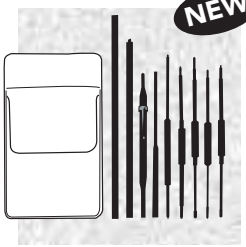

- Contains all 9 anti-static alignment tools
- Wide range of tip styles and sizes for adjusting or aligning any conventional component
- Includes pocket storage case
- Kit includes adjustment driver, combination aligner, duplex aligner, small hex/driver, hex/tip tool, mini-potentiometer/trimmer, double-ended hex, 3-in-1 hex core tool and square/hex tool

Part Number		Price per ea.
92-0562-00	Anti-Static Precision Tool Kit	11.45

ESD FIELD SERVICE KIT

NEW

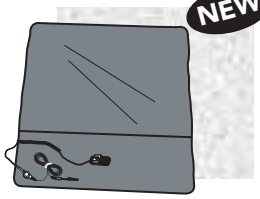

- Compact and easily transportable
- Folds to 8-1/2" for travel
- 26" X 24" conductive mat with pocket along bottom
- 6 ft. ESD strap
- 10 ft. cord to ground

Part Number		Price per ea.
92-0888-00	ESD Field Service Kit	39.95

ZERO CHARGE® SCREEN & KEYBOARD CLEANER

NEW

- Eliminates static charge from sensitive surfaces and provides long-term static protection
- For optical clarity and distortion free reading
- Removes hand oils, ink marks, dust, fingerprints, nicotine, syrup, carbon and other soils
- Safe on plastic, ceramics, glass, metal and elastomers
- Non-streaking
- Non-ozone depleting
- 50 pre-saturated packets per box; 10 boxes per case
- Sold in boxes of 50

TECHSPRAY™

Part Number		Price per box
29-0059-00	Zero Charge® Screen & Keyboard Cleaner	18.35

Visit Our Web Site:
happcontrols.com
for **NEW** Product Updates!!

STATIC SHIELD BAGS

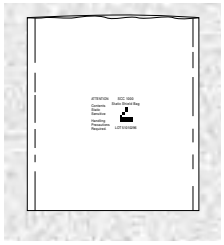

- Prevents incoming static charges from damaging ESD sensitive products
- Metal "Faraday" Cage layer protects products from electric energy inside and prevents static build-up
- Meets requirements of MIL-B-81705 Rev. C, Type III and EIA Standard 541
- Minimum order 10

Part Number		Inside W x L	Price per ea.
39-0810-AS	Static Shield Bag	8" x 10"	1.60

PROFESSIONAL ADJUSTABLE WRIST STRAP KIT

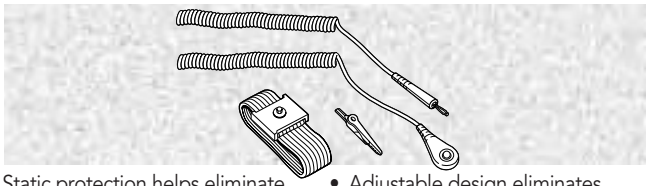

- Static protection helps eliminate damage to electronic devices
- Elastic material-extra wide and soft for comfort and has silver impregnated nylon knitted on inside for super conductivity
- Adjustable-Can be fitted to any size. Once adjusted and locked, the material will not slip
- Adjustable design eliminates exposed conductive "tail"
- Stainless steel stud
- No sloughing-safe for micro electronics
- Non-allergenic stainless steel
- Kit includes: 10 ft. coil cord, 4MM snap stud and alligator clip

Part Number		Price per ea.
80-0308-00	Professional Adjustable Wrist Strap Kit	20.85

ANTI-STATIC FOAM

NEW

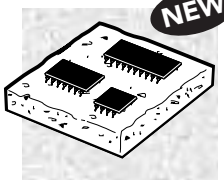

- Keep your electronic repair parts safe and handy.
- Protects delicate IC leads during shipping and storage.
- Protects against ESD "Static-Zap" damage
- Great for storing and transporting semiconductors
- Simply insert component into foam to keep leads from damage
- Pink anti-static foam squares 2" square X .25" thick
- Black anti-static foam sheets 36" x 30" x 5/16" Thick – use to line drawers

Part Number		Price per ea.
39-0059-00	Pink Anti-Static Foam Squares 2" Square x .25" Thick	.29
39-0059-10	Black Anti-Static Foam Sheets 36" x 30" x 5/16" Thick	49.95

TECHCLEAN® TWILLWIPE

NEW

- Designed for wiping abrasive surfaces
- Tightly woven 100% cotton – enables it to be used in static sensitive areas
- Low triboelectric generation
- Non-existent chemical extractables
- Pure cleaning
- Low linting
- 6" X 6" flat wipes
- Sold per bag of 100 wipes

TECHSPRAY™

Part Number		Price per ea.
29-0211-00	TechClean® Twillwipe	17.00

ECONOMY 40 PIECE METRIC AND S.A.E. SOCKET SET

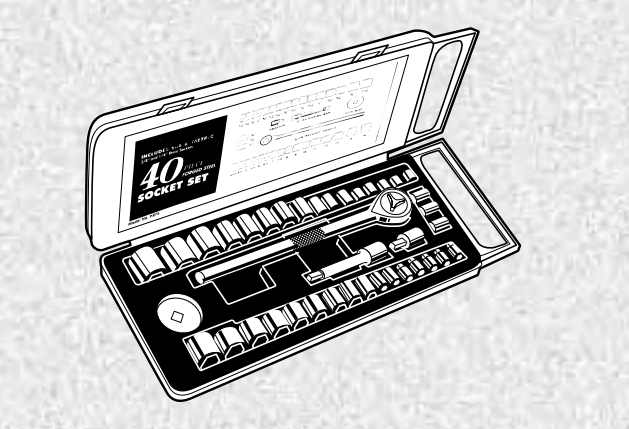

- Set contains:
  3/8" drive ratchet
  3/8" drive 3" extension
  3/8" drive (F) to 1/4" drive (M) adapter
  3/8" drive ratchet spin disk
  3/8" drive sockets S.A.E. 5/8", 11/16"
  3/8" drive sockets metric 14, 16mm
  1/4" drive sockets S.A.E. 5/32", 3/16", 7/32", 1/4", 9/32", 5/16", 11/32", 3/8", 13/32", 7/16", 15/32", 1/2", 17/32", 9/16"
  1/4" drive 6 point sockets metric 4, 4.5, 5, 5.5, 6, 6.5, 7, 7.5, 8, 9, 10, 11, 12, and 13mm
  1/4" drive 8 point sockets S.A.E. 1/4", 5/16", 3/8"

Part Number		Price per ea.
92-0109-00	Economy 40 Piece Metric and S.A.E. Socket Set	13.25

GATOR GRIP® UNIVERSAL SOCKET KIT

The amazing Gator Grip® makes half of your toolbox obsolete! This one socket fits fasteners of almost any shape. No longer waste time searching for socket after socket, when one socket can do the work of a whole set. The Gator Grip won't slip off nuts or strip them.

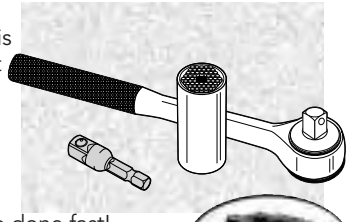

Save time and hassles, get the job done fast!

- As seen on TV
- Instantly fits over 1000 fasteners
- Always the right size socket
- One socket for both standard & metric
- Removes rusted & damaged nuts & bolts
- Unique round design won't damage fasteners
- Pins instantly adjust to grip any shape, no adjustments needed
- Even fits screw eyes, hooks, wing nuts and square nuts
- Superior grip, each hardened steel pin features it's own spring to provide a precision fit
- Save time and effort
- Made in USA
- 1 year manufacturer warranty

Kit Includes:

(1) Gator Grip® Universal Socket, Fits 1/4" - 3/8" & 7mm - 19mm
(1) 3/8" Drive Reversible Ratchet Wrench
(1) High Speed Drill Adapter

Part Number		Price per ea.
92-0305-00	Gator Grip Universal Socket Kit	19.99

XCELITE® SERIES 99® 23-PIECE ROLL KIT

NEW

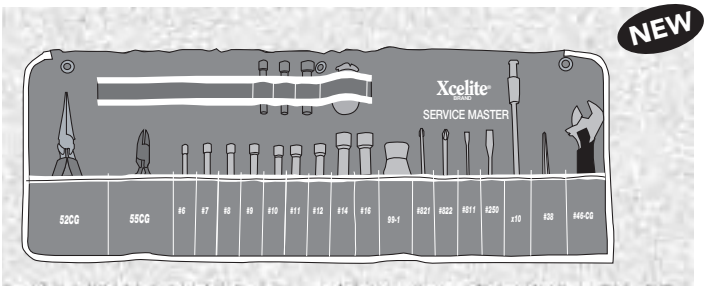

- Versatile 23-piece set of quality tools
- Provides a variety of quick change tools and tool combinations to speed up assembly and service work
- All Blades are high quality steel, hardened and tempered for optimum performance
- Plastic handles have patented spring device that holds blades firmly, yet permits quick, easy insertion and removal
- Regular handles accommodate all blades, single and reversible
- Stubby, Tee and Ratchet handles used only with single-end blades
- Xcelite Ref# SM99
- Durable roll-up plastic coated canvas case

Kit Includes:

(1) 5" Diagonal cushion grip pliers, (1) 6" Long nose cushion grip pliers, (1) 8" Cushion grip adjustable wrench, (1) Nut driver handle, (1) Stubby handle, (9) Nutdrivers, (3) Stubby nutdrivers, (2) Phillips screwdrivers, (2) Slotted screwdrivers, (1) Reamer, (1) Extension tool

Part Number		Price per ea.
92-1009-00	Xcelite® Series 99® 23-Piece Roll Kit	179.95

UNIVERSAL COLOR TV ALIGNMENT TOOL KIT

- 5 different alignment tools for all standard adjustments
- All tools are made of Delrin in various colors for easy identification
- Included is the "Extend-it" to make long reach alignors out of each tool
- Kit contains 1 each:
  "Extend-it" shaft extension
  Zenith alignment tool
  5" hex wrench
  Hex iron core tool
  Hex core tool
  Double end tool

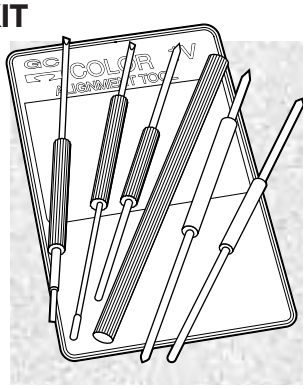

Part Number		Price per ea.
92-0196-00	Universal Color TV Alignment Tool Kit	8.35

MINI HEAT GUN WITH SHRINK TUBING KIT

NEW

- Compact and lightweight
- Nozzle temperature to 1000°F
- Uses standard 110v AC outlet
- 6 ft. electrical cord with workbench storage loop
- 60 piece assortment of heat shrink tubing; includes sizes 1/8", 3/16", 1/4", 3/8", and 1/2"

Part Number		Price per ea.
92-0573-00	Mini Heat Gun With Shrink Tubing Kit	41.60

© HAPP CONTROLS

4" DIAGONAL PLIERS

- For work in close quarters
- Standard beveled edges
- Forged alloy steel construction
- Red plastic-coated cushion grip
- 4" overall length
- Ref. No. 54CGV

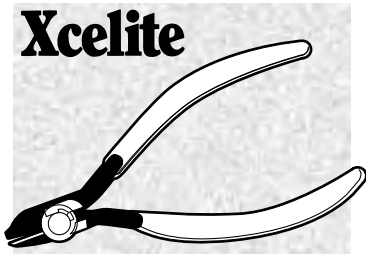

Part Number		Price per ea.
92-0096-00	4" Diagonal Pliers	22.16

ALL PURPOSE CUTTING PLIERS

- Standard beveled edges
- Forged alloy steel construction, precision machining and scientific proportioning
- Exceptional strength and performance
- Red plastic-coated cushion grip provides maximum leverage
- Available in 5" or 6" length

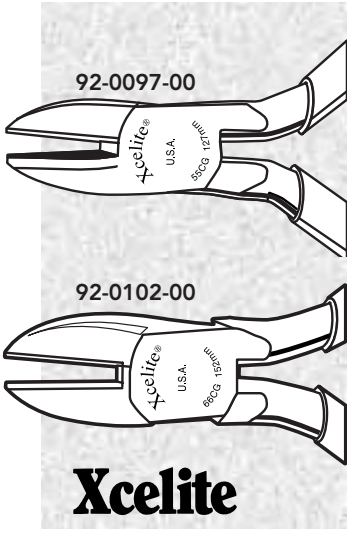

Part Number		Ref. No.	Price per ea.
92-0097-00	5" All Purpose Cutting Pliers	55CGV	22.60
92-0102-00	6" All Purpose Cutting Pliers	66CGV	23.12

DIAGONAL CUTTING PLIERS

- Designed for heavy-duty wire cutting
- Electronically induction hardened and hand-honed cutting edges
- Made of forged alloy tool steel
- Individually tested for strength and cutting ability
- Polished head
- 7" overall length
- Ref. No. 542-7CV

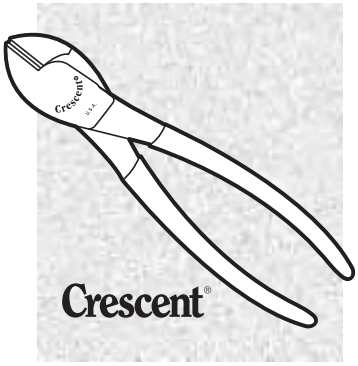

Part Number		Price per ea.
92-0103-00	Crescent Diagonal Cutting Pliers	22.14

Visit Our Web Site:
happcontrols.com
for **NEW** Product Updates!!

ANGLED HEAD CUTTING PLIERS

- For snap cutting 20 gauge and smaller soft copper wire
- Flush edges, polished oval joint
- Back of pliers is angled at 30 degrees for cutting in difficult areas
- 4" overall length
- Ref. No. GA54J

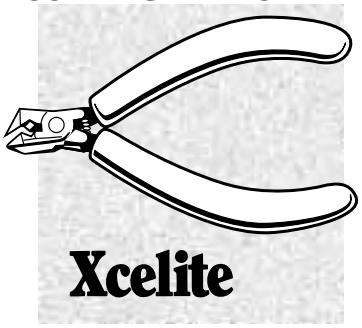

Part Number		Price per ea.
92-0081-00	Angled Head Cutting Pliers	31.20

ELECTRONIC SHEAR

- Low profile, general purpose cutter
- Superior blade by-pass shear cutting action
- Better cuts with half the effort
- Greatly reduced mechanical shock delivered to the work
- Light blue grips
- 5" overall length
- Ref. No. 170M

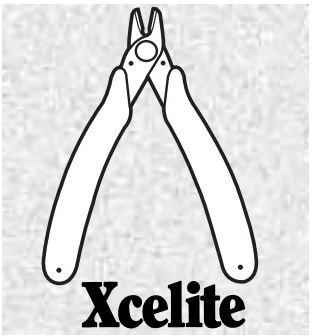

Part Number		Price per ea.
92-0087-00	Electronic Shear	6.74

SLIM LINE TAPERED HEAD CUTTER

- Slim line tapered head
- Diagonal cutting pliers
- Flush cutting
- Blue puffy grips
- 4" overall length
- Ref. No. MS545J

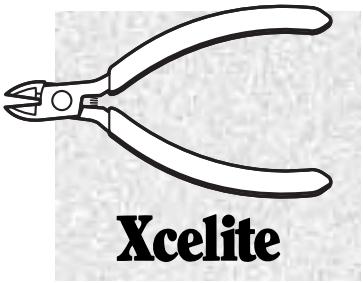

Part Number		Price per ea.
92-0121-00	Slim Line Tapered Head Cutter	18.58

DIAGONAL PLIERS

- For semi-flush tip cutting of fine wires
- Great for use in close quarters
- Exceptional strength and performance
- Red plastic-coated cushion grip
- 4" overall length
- Ref. No. 64CGV

Part Number		Price per ea.
92-0101-00	Diagonal Pliers	28.06

CRESCENT TONGUE & GROOVE PLIERS

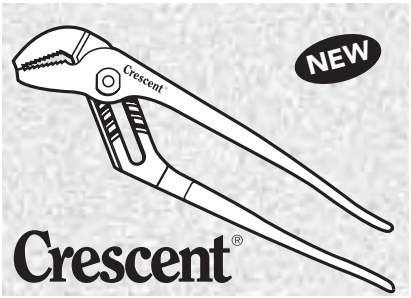

- Made from finest quality tool steel
- Designed to grip all shapes
- Straight jaws and self-locking jaw adjustment
- Forged, hardened and tempered
- Red non-slip cushion handle grips
- Precision-milled ribs assure smooth, positive interlock between two halves with no chance of halves separating or jumping out of grooves
- Crescent Ref # HL14PH - 4"
- Crescent Ref # R27CV - 7"

Part Number		Price per ea.
92-1011-00	Crescent 4" Tongue & Groove Pliers	14.95
92-1012-00	Crescent 7" Tongue & Groove Pliers	14.95

SUBMINIATURE NEEDLE NOSE PLIERS

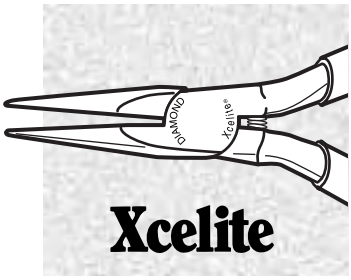

- Positive gripping of fine wire or subminiature components
- Serrated jaws
- Fine point allows use in confined areas
- Green cushion grips
- 4" overall length
- Ref. No. L4-V

Part Number		Price per ea.
92-0089-00	Subminiature Needle Nose Pliers	17.38

5" NARROW DIAGONAL CUTTING PLIERS

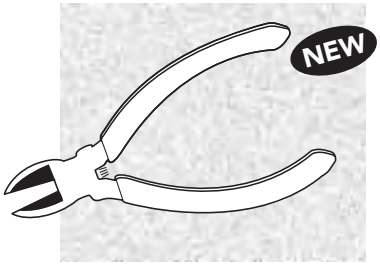

- Narrow jaws work easily in confined areas
- Great for cutting cable ties on money bags
- Useful for all general purpose electric and electronic work
- Induction hardened cutting edges
- Overall length: 5"

Part Number		Price per ea.
92-0336-00	5" Narrow Diagonal Cutting Pliers	5.10

TELESCOPING MIRROR WITH MAGNETIC PICK-UP

- 1.25" round mirror is Ideal for seeing in difficult places
- Swivel connection allows mirror to be angled just right
- 1 lb. Pull magnet picks up dropped parts
- Magnet end extends to 27.25"; closes to 5.25"
- Color: chrome with red vinyl handle

Part Number		Price per ea.
92-0350-00	Telescoping Mirror with Magnetic Pick-Up	7.25

LONG NOSE NEEDLE NOSE PLIERS

- Extra long nose
- Allow entry to hard to reach areas
- 6" overall length
- Ref. No. NN7776

Part Number		Price per ea.
92-0098-00	Long Nose Needle Nose Pliers	22.76

LONG NOSE PLIERS WITH SIDE CUTTERS

- For firm gripping and looping of wire
- Side cutters for cutting 20 gauge soft copper wire
- Serrated jaw
- Forged alloy steel construction
- Available with or without side cutters
- Red plastic-coated cushion grip
- 6" overall length
- Ref. No. 51CGV

Part Number		Price per ea.
92-0208-00	Long Nose Pliers with Side Cutters	23.48

DIAGONAL LONG NEEDLE NOSE PLIERS

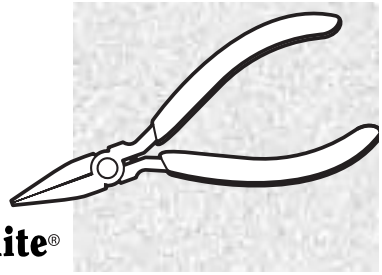

For general purpose use

- 1-3/16" thin long nose
- Serrated jaws
- For pick-up and wire forming
- 5" overall length
- Ref. No. LN54

Diamond®/Xcelite®

Part Number		Price per ea.
92-0105-00	Diagonal Long Needle Nose Pliers	19.10

TWEEZERS

- Premium stainless steel tweezers
- Precision quality-made in the USA
- Made from anti-magnetic, anti-acid stainless steel
- For electronic and fine assembly work

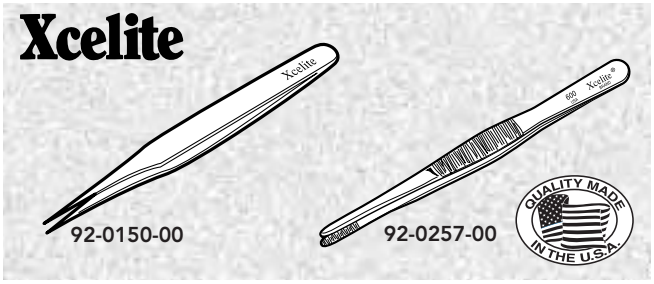

Part Number			Price per ea.
92-0150-00	Ref. No. XSST-4	Fine Taper Point Tweezers	12.78
92-0257-00	Ref. No. XHT-600	General Duty Tweezers-Round Point	5.36

© HAPP CONTROLS

MIDGET SLIP JOINT PLIERS

- Miniature pliers with narrow jaws
- 3-jaw opening adjustment to 1/2"
- Red plastic-coated cushion grip
- 5" overall length
- Ref. No. 50CGV

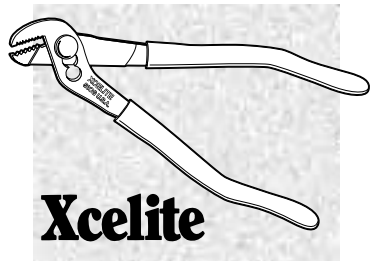

Part Number		Price per ea.
92-0093-00	Midget Slip Joint Pliers	19.00

TONGUE AND GROOVE PLIERS

- All purpose pliers
- Angled serrated teeth in jaws
- Maximum opening 1-1/8"
- 4-position machined rib lock design
- Red plastic-coated cushion grip
- 7" overall length
- Ref. No. 53CGV

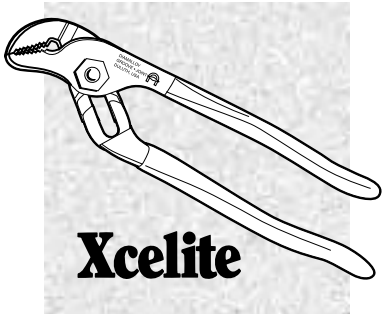

Part Number		Price per ea.
92-0095-00	Tongue and Groove Pliers	15.34

10" STRAIGHT JAW PLIERS

- Straight jaws and self-locking jaw adjustment
- Forged, hardened and tempered
- Red non-slip cushion handle grips
- Maximum opening 1-1/2"
- 10" overall length
- Crescent #R210C

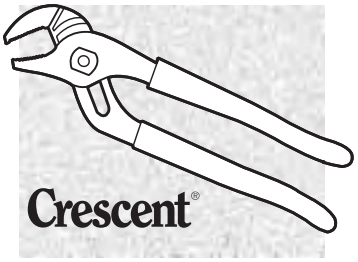

Part Number		Price per ea.
92-0099-00	10" Straight Jaw Pliers	19.12

ADJUSTABLE WRENCH

- Rugged construction
- Quick, one-hand adjustment
- Chrome plated, polished heads
- Red cushion grip handle

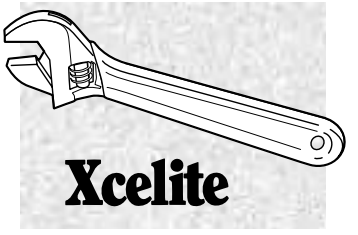

Part Number		Ref. No.	Price per ea.
92-0092-00	6" Adjustable Wrench	46CGV	22.14
92-0311-00	4" Adjustable Wrench	44CGV	21.34

COMBINATION SLIP JOINT PLIERS

- For general and heavy-duty use
- Angled serrated teeth in jaws
- Forged alloy steel construction
- Chrome plated
- 6" overall length
- Ref. No. 76CV

Part Number		Price per ea.
92-0104-00	Xcelite Combination Slip Joint Pliers	11.24

SARGEANTS CRIMPING TOOL

- For crimping comparitor JST terminals, Molex pins and .100 & .156 center edge connectors
- Ref. No. 1028CT

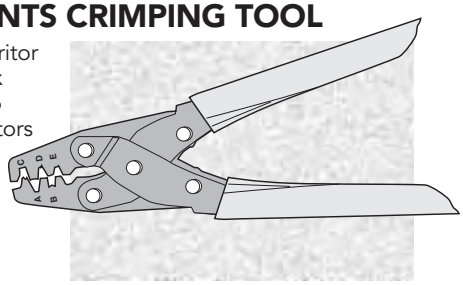

Part Number		Price per ea.
92-0032-00	Crimping Tool	33.99

CRIMPING/WIRE STRIPPER/BOLT CUTTING HAND TOOL

- Ideal for prototype work, small production volumes and repair jobs
- Clean cutting wire cutter
- Wire Stripper for 10,12, 14, 16, 18, and 20 gauge wire
- Bolt Cutter for 8-32, 10-24, 10-32, 6-32, and 4-40 threads
- Crimping tool for .062" & .093" pins (terminals)

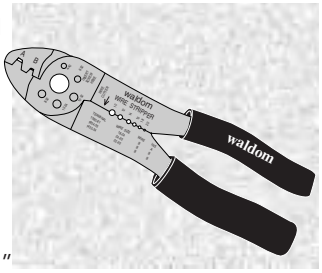

Part Number		Price per ea.
11-03-0004	Handling Crimping/Wire Stripper	20.45

HEAVY DUTY ADJUSTABLE WRENCH

- World famous Crescent brand
- For professional or industrial use
- Tension spring stabilizes jaw and knurl adjusts easily
- Alloy steel and heat treated
- Chrome plated finish resists rust and corrosion
- Polished head and red non-slip cushion grip

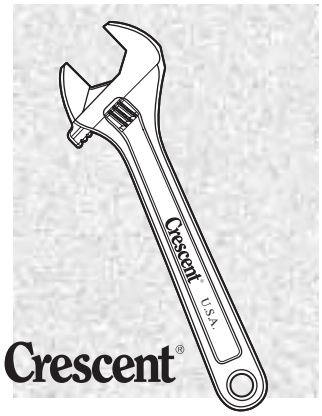

Part Number		Ref.	Price per ea.
92-0168-00	12" Heavy Duty Adjustable Wrench	AC112C	41.00
92-0164-00	4" Heavy Duty Adjustable Wrench	AC14CV	20.76

I.C. EXTRACTION TOOL

- For easy removal of integrated circuits

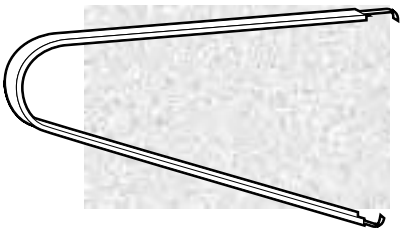

Part Number		Price per ea.
92-0022-00	I.C. Extraction Tool	4.90

8" CRIMPING TOOL/WIRE STRIPPER/ BOLT CUTTER

NEW

- Crimps 22-18, 16-14, & 12-10 AWG terminals and connectors
- Color-coded crimp teeth for fast and accurate crimping
- AWG numbered wire stripper for 10, 12, 14, 16, 18, & 20-22 gauge wire
- Bolt cutter for 8-32, 10-24, 10-32, 6-32, & 4-40 threads
- An affordable, 4-way crimping/stripping tool
- Length: 8"

Part Number		Price per ea.
92-0274-00	8" Crimping Tool	6.75

COMPACT MULTIPURPOSE PLIERS

NEW

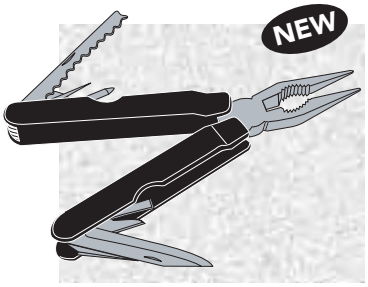

- Contains: pliers, cutter, screwdriver, saw, etc
- Heavy duty at a value price
- Comes with a carrying bag
- Length: 3.94"
- Weight: 162 grams
- Velleman ref. no. VTMPPLC

Part Number		Price per ea.
92-0356-00	Compact Multipurpose Pliers	10.40

CAT 5 CABLE JACKET STRIPPER

NEW

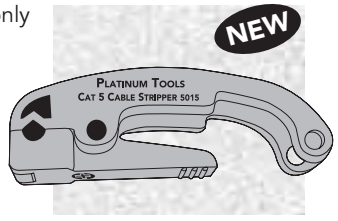

- Designed for Cat 5/5E cables only
- Will not knick inner conductors
- Long life blade
- Durable high impact plastic housing
- Easy to use, no adjustments necessary
- Molded from yellow plastic to make it easier to find. No more lost tools!
- Length: 3.5", weight: 23 grams

Part Number		Price per ea.
92-0613-00	Cat 5 Cable Jacket Stripper	12.45

ELECTRONIC SNIPS

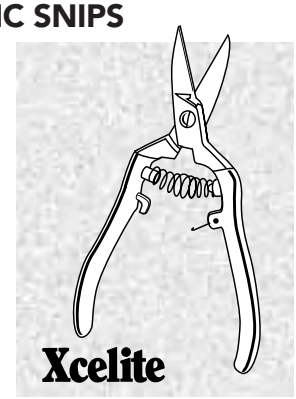

- Shearing action of 1-1/2/38mm cut pointed blades prevents peaks on fine wires and filaments
- Useful for removing insulation and cutting light sheet metal
- Coil spring opens blades
- Safety latch
- Red plastic-coated cushion grip
- 6-1/2" overall length
- Ref. No. 86CGV

Part Number		Price per ea.
92-0108-00	Electronic Snips	31.78

INDUSTRIAL SHEARS

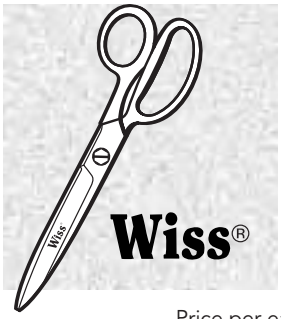

- Made of high carbon steel
- Hot drop forged nickel-plated blades
- Black handle
- 7-1/8" overall length
- Ref. No. 437

Part Number		Price per ea.
92-0230-00	Industrial Shear	29.76

SEIZERS

- Versatile tool with unusual holding qualities
- Clamps firmly to hold wires for soldering
- Acts as a heat sink and retrieves small parts from hard-to-reach places
- Precision-machined from perfectly tempered stainless steel
- Box-joint construction
- 3-position snap lock
- Serrated jaws
- 6" long

Part Number			Price per ea.
92-0090-00	Ref. No. 42HV	Straight Nose Seizer	8.56
92-0091-00	Ref. No. 43HV	Curved Nose Seizer	8.56

40 PIN GROUNDED DIP EXTRACTOR

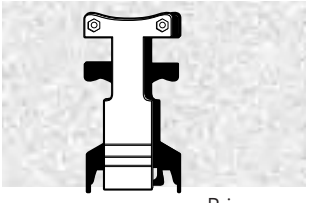

- Instant and accurate extraction
- Simply place the tool on the socket and depress the plunger
- Conductive finish with ground strap connection point

Part Number		Price per ea.
92-0253-00	40 Pin Grounded Dip Extractor	20.85

© HAPP CONTROLS

WIRE STRIPPER & CUTTER

- Cuts and strips both solid and stranded wire
- Adjustable screw stop for different wire sizes
- Hardened with ground blades
- Red plastic-coated cushion grip
- 5" overall length
- Ref. No. 100X

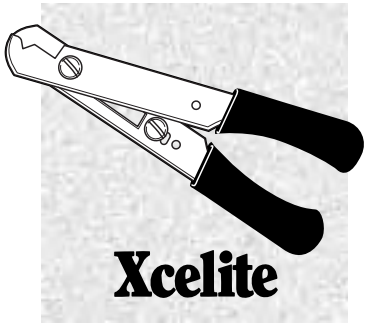

Part Number		Price per ea.
92-0086-00	Wire Stripper & Cutter	8.80

WIRE STRIPPER & CUTTER

- Unique cam stop adjustment for different wire sizes, stays put even with screw loose
- Red plastic-coated cushion grip
- 5-1/4" overall length
- Ref. No. 103-SV

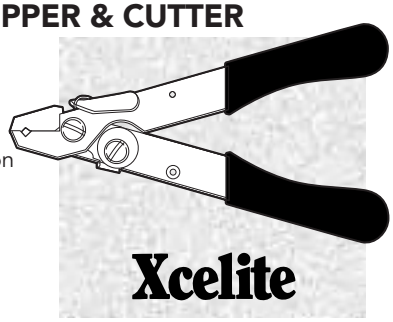

Part Number		Price per ea.
92-0084-00	Wire Stripper & Cutter	13.72

ELECTRICAL PLIERS

- Wire cutting and stripping edges located in front of pivot for use in tight places
- Needle nose pliers add wire pulling and bending capabilities
- Scissors-action stripper insulated for cleaner, faster, more accurate stripping
- Serrated edge
- Red cushion grip handle
- 6" overall length
- Ref. No. 105CGV

Part Number		Price per ea.
92-0082-00	Electrical Pliers	16.16

3-IN-1 TAP TOOL

- Cuts or cleans threads in electrical boxes, lighting fixtures, all thin metal and plastics
- Three sizes in one tool
- Sturdy comfortable handle
- Replaceable tap blades available

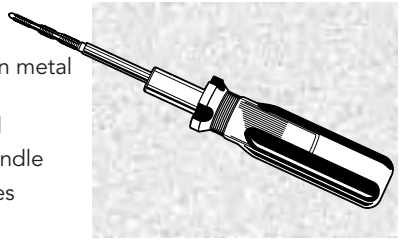

Part Number		Price per ea.
92-0024-00	3-In-1 Tap Tool	13.20

DELUXE WIRE STRIPPER & CUTTER

- Features new shape which fits the hand easily and more comfortably
- Hardened steel
- All cutting surfaces are made to ensure perfect shearing action every time
- Adjustable cam allows tool to be set to fit all commonly used insulated wires
- Smooth working safety lock
- Red plastic-coated cushion lock
- 5-1/2" overall length
- Ref. No. 102-SV

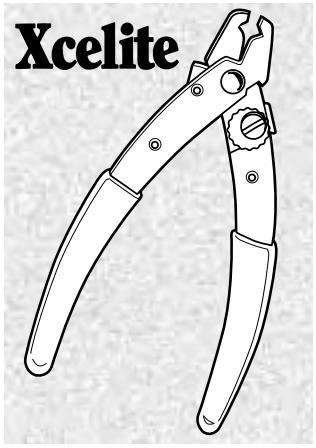

Part Number		Price per ea.
92-0085-00	Deluxe Wire Stripper & Cutter	13.72

WIRE STRIPPER & CUTTER

- For all types and sizes of wire
- Wide size-range bolt cutter
- Scissors-action, up-front wire cutting and wire stripping
- Hardened pivot joint bushing and crimp stations
- Red cushion grip handle
- 8-1/4" overall length
- Ref. No. 104CGV

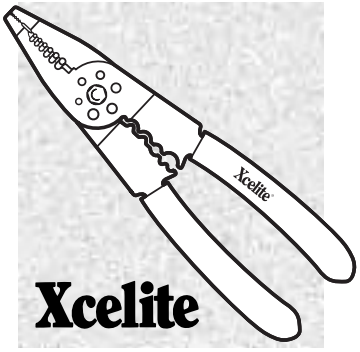

Part Number		Price per ea.
92-0083-00	Wire Stripper And Cutter	33.70

ROUND CABLE SLITTER/STRIPPER

- Slits/strips round cables
- Use on Coax or Cat 5 cables
- Range: 0.18" – 1.0" diameter
- Adjustable cutting depth
- Blade swivels for longitudinal or spiral cuts

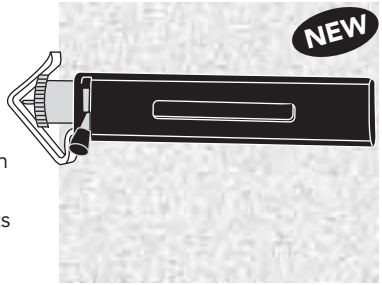

Part Number		Price per ea.
92-0352-00	Round Cable Slitter/Stripper	29.95
92-0351-00	Replacement Blade	6.95

THIRD HAND WITH MAGNIFIER

- Magnifying glass for close work
- Works at any angle
- When two hands are not enough
- Dioptre 2.5
- Size: 4.9" x 2.2" x 7.7"

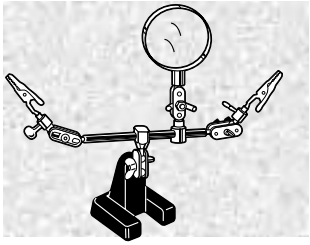

Part Number		Price per ea.
92-0042-00	Third Hand with Magnifier	10.35

42 POCKET-18" SIDEGLIDE™ ROLLER BAG

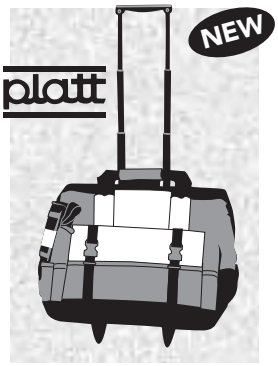

- 32 Pockets inside and 10 outside, help organize tools and accessories
- 13-1/2" x 9" multi-compartment plastic tray organizes small parts
- Telescoping handle extends for fast transport on large, easy-roll wheels
- Made with durable 600 Denier nylon
- Reinforced interior bottom panel
- Heavy duty stitching
- Bar-tacking at stress points
- 18" L x 10" W x 14" H

Part Number		Price per ea.
92-0365-00	42 Pocket 18"Sideglide™ Roller Bag	99.99

PLATT SUPER-SIZE™ TOOL CASE WITH WHEELS AND TELESCOPING HANDLE

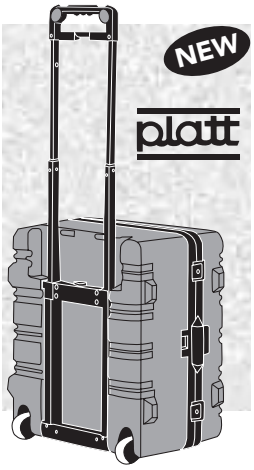

- High-tech rugged ribbed case in a larger size
- Black valance with all black hardware, combination lock, cast key locks
- Full-length piano hinge, stitched vinyl steel-core handle
- Ball-bearing wheels
- Telescoping handle
- Comes standard with SG and SH super-size pallets
- Manufactured by Platt, Ref # 369THY-SGSH
- Color: Yellow
- Inside Dimensions: 17-1/2" L x 14-5/8" W x 9" D
- Tools not included

Part Number		Price per ea.
92-1329-00	Platt Super-Size Tool Case	251.85

PROFESSIONAL ELECTRONIC TOOL KIT

- 13 Assorted screwdrivers
- 6 Assorted precision screwdrivers
- Brush
- Mini-drill set
- Utility knife
- IC extractor
- Vice
- Electrical tape
- Flashlight
- Anti-static strap
- Soldering iron & stand
- Assorted pliers
- Digital multimeter
- Solder
- 6" stainless scissors
- Folding hex wrench
- 8" lineman's pliers
- 6" tweezers
- Mini-vacuum cleaner
- Desoldering pump
- 6" adjustable wrench
- All-in-one crimper
- Voltage test screwdriver
- Components box
- 5 pc. file set
- Removable pallets
- 10 pc. mini-wrench set
- Tool carrying case

Part Number		Price per ea.
92-0345-00	Professional Electronic Tool Kit	249.99

PLATT MECHANICS TOOL BAG

- Black Cordura fabric
- Water-repellent and very durable
- 8 sewn-in pockets on the inside and 2 snap pouches on the outside
- Compact utility bag will keep your tools and parts organized
- 12" L x 6" W x 6-1/2" D

Part Number		Price per ea.
92-0348-00	Platt Mechanics Tool Bag	29.99

PLATT 6" DELUXE POLYPROPYLENE TOOL CASE

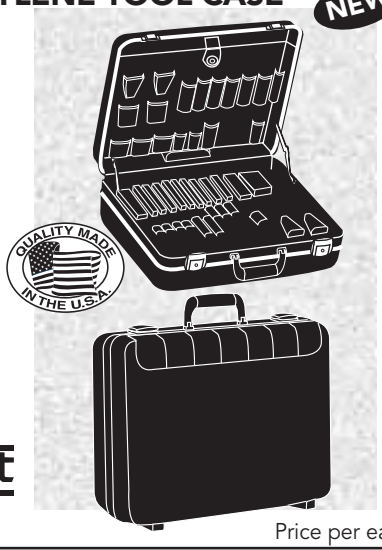

- Injection molded polyethylene shell
- Extruded aluminum frame with black trim
- Golf grip handle
- Cast chrome key locks and full length piano hinge
- Interior has two molded pallets and deluxe literature pocket
- 18" L x 13" W x 6" D
- Made in USA

Part Number		Price per ea.
92-800T-CB	Tool Case	149.99

39 PIECE DURA-DRIVER RATCHET DRIVER MECHANICS KIT

NEW

- Hidden interchangeable bit storage keeps bits handy and secure
- 3 position High Torque Ratchet
- No slip grip stops slippage for higher torque
- S2 Industrial Steel bits resist wear and breakage
- Chrome Vanadium socket with true fit hex design, prevent rounding and stripping of nuts and bolts
- Ergonomic handle
- Crescent ref. no. SDMBR1

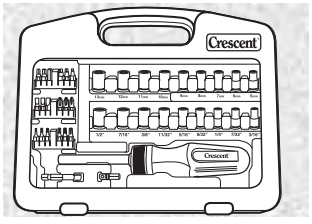

Crescent®

Kit Contains:
Dura-Driver Ratchet Screwdriver with 3 positions
9 Fractional sockets: 3/16", 7/32", 1/4", 9/32", 5/16", 11/32", 3/8", 7/16", 1/2"
9 Metric Sockets: 5mm, 6mm, 7mm, 8mm, 9mm, 10mm, 11mm, 12mm, 13mm,
18 Screwdriver Bits: #1 Phillips, #2 Phillips, #3 Phillips, 3/16"
Slotted, 5/32" Slotted, 1/4" Slotted, #1 Square Recess, #2 Square Recess,
#3 Square Recess, #10 Torx, #15 Torx, #20 Torx, #25 Torx, #30 Torx, #40 Torx, 5/32" Hex,
3/16" Hex, 1/4" Hex 2 Socket Adapters: 1", 2"

Part Number		Price per ea.
92-0358-00	39 Piece Dura-Driver Ratchet Driver Mechanics Kit	31.96

© HAPP CONTROLS

ALLEN HEX SOCKET DRIVERS-BALLPOINT STYLE

- For tightening and removing Allen type socket head screws
- Great for out-of-reach places or merely when wanting an easier, quicker way to drive them home
- Unique "ballpoint" tip will engage screw head from any angle
- Slips easily into sockets and holds securely without reaming, because ends are precision-machined to close tolerances
- Amber handles

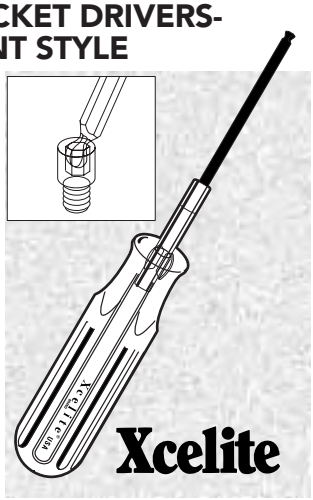

Part Number	Ref. No.	Hex Size	Shaft Length	Overall Length	Price per ea.
92-0141-00	LN-20BP	.050"	4"	6-5/8"	9.00
92-0140-00	LN-21BP	1/16"	4"	6-5/8"	9.00
92-0137-00	LN-22BP	5/64"	4"	6-5/8"	9.00
92-0139-00	LN-23BP	3/32"	4"	7-1/8"	9.00
92-0153-00	LN-764BP	7/64"	4"	7-1/8"	9.08
92-0319-00	LN-24BP	1/8"	4"	7-1/8"	9.44
92-0132-00	LN-25BP	5/32"	4"	7-1/8"	9.44
92-0075-00	LN-26BP	3/16"	4"	8-1/8"	9.44

S.A.E. ROLL-UP KIT-"BALLPOINT STYLE" FOR ALLEN HEX SOCKET DRIVERS

- Great for out-of-reach places or merely when wanting an easier, quicker way to drive them home
- Unique "ballpoint" tip will engage screw head from any angle
- Slips easily into sockets and holds securely without reaming, because ends are precision-machined to close tolerances
- Roll-up canvas case
- Amber handles
- Kit includes following sizes: .050", 1/16", 5/64", 3/32", 7/64", 1/8", 9/64", 5/32" and 3/16"
- Ref. No. LN-9BP

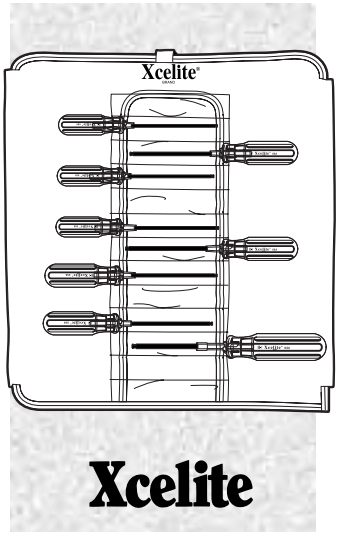

Part Number		Price per ea.
92-0160-00	S.A.E. Roll-Up Kit-"Ballpoint Style"	80.28

Visit Our Web Site:
happcontrols.com
for NEW Product Updates!!

"BALLPOINT" ALLEN HEX SOCKET SCREWDRIVER SET

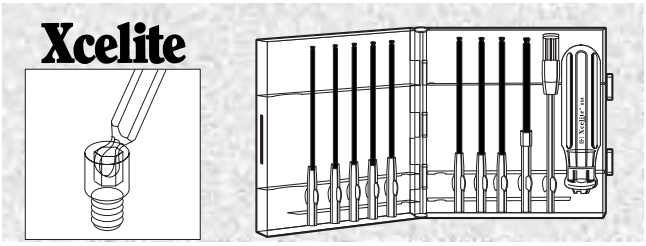

- Great for out-of-reach places or merely when wanting an easier, quicker way to drive them home
- Unique "ballpoint" tip will engage screw head from any angle
- 11-piece set in compact see through plastic case
- Ref. No. 99-PS-40BP
- Slips easily into sockets and holds securely without reaming, because ends are precision-machined to close tolerances
- Set includes handle, 4" extension and the following 4" long drivers: .050", 1/16", 5/64", 3/32", 7/64", 1/8", 9/64" 5/32", 3/16"

Part Number		Price per ea.
92-0180-00	"Ballpoint" Allen Hex Socket Type Screwdriver Set	79.02

ALLEN HEX SOCKET TYPE SCREWDRIVER SET

- Inch sizes
- 11-piece set
- Clear plastic case
- Set includes handle, 4" extension and following 4" long drivers: .050", 1/16", 5/64", 3/32", 7/64", 1/8", 9/64", 5/32" and 3/16"
- Ref. No. 99PS-40

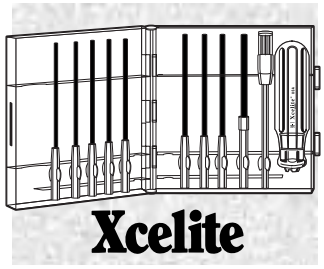

Part Number		Price per ea.
92-0181-00	Allen Hex Socket Type Screwdriver Set	52.44

METRIC ROLL-UP KIT-"BALLPOINT STYLE" FOR ALLEN HEX SOCKET DRIVERS

- Great for out-of-reach places or merely when wanting an easier, quicker way to drive them home
- Unique "ballpoint" tip will engage screw head from any angle
- Slips easily into sockets and holds securely without reaming, because ends are precision-machined to close tolerances
- Roll-up canvas case
- Amber handles
- Kit includes following sizes: 1.27mm, 1.5mm, 2mm, 2.5mm, 3mm, 4mm, 5mm and 6mm
- Ref. No. LN-8MMBP

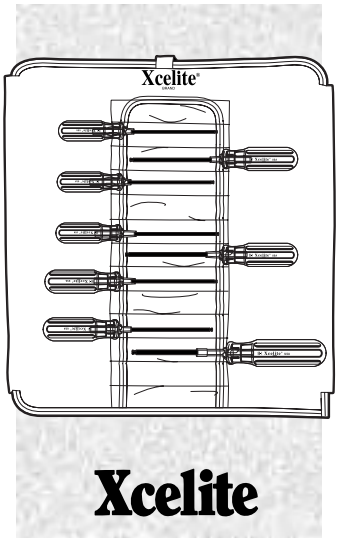

Part Number		Price per ea.
92-0161-00	Metric Roll-Up Kit-"Ballpoint Style"	80.30

7-PIECE NUTDRIVER SET

- Convenient blow molded case for wall mounting
- Color-coded handles
- 7-1/4" overall length
- Ref. No. 147TB

- Set includes:

Color	Hex Size
Red	1/4"
Orange	9/32"
Amber	5/16"
Green	11/32"
Blue	3/8"
Brown	7/16"
Red	1/2"

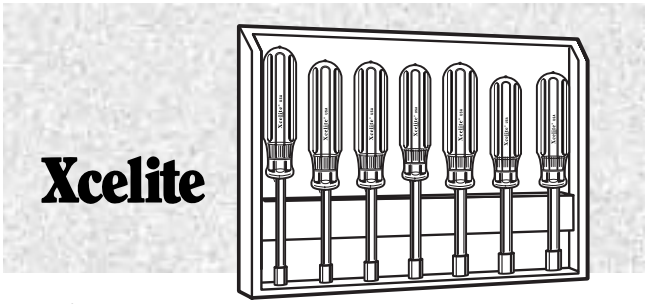

Part Number		Price per ea.
92-0077-00	7-Piece Nutdriver Set	49.46

11-PIECE NUTDRIVER SET

- Handles more jobs with fewer tools, saves bench space and lightens service kit
- Equipped with remarkable black, "piggyback" torque amplifier handle
- Set housed in attractive clear plastic case
- Color-coded handles
- Ref. No. PS-120 - Inches
- Ref. No. PS-121mm - Metric

- Set includes:

Color	Inch Size	Metric Size
Blue	3/32"	3mm
Red	1/8"	3.5mm
Amber	5/32"	4mm
Black	3/16"	4.5mm
Brown	7/32"	5mm
Red	1/4"	5.5mm
Orange	9/32"	6mm
Amber	5/16"	7mm
Green	11/32"	8mm
Blue	3/8"	10mm
Black	Torque Handle	Torque Handle

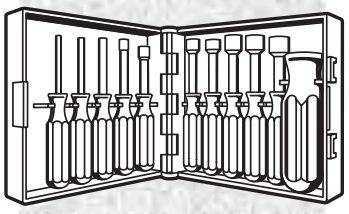

Xcelite

Part Number		Price per ea.
92-0078-00	Nutdriver Set - Inch Sizes	42.54
92-0280-00	Nutdriver Set - Metric	52.44
92-0354-00	Replacement Handle	3.95

METRIC "KEEP & CARRY" NUTDRIVER KIT

- 10 piece metric set
- Sturdy red plastic carrying case
- 7-1/4" overall length
- Contains sizes 4mm, 4.5mm, 5mm, 5.5mm, 6mm, 7mm, 8mm, 10mm, 11mm, and 13mm
- Ref. No. 4-13MM

Part Number		Price per ea.
92-0209-00	Metric "Keep And Carry" Nutdriver Kit	72.70

NUTDRIVERS

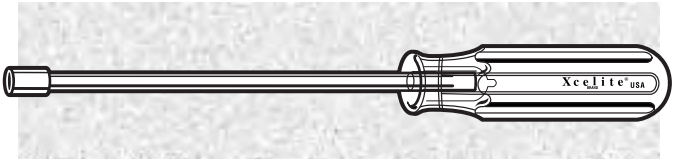

- Full hollow shaft

Xcelite

Part Number	Ref. No.	Color	Hex Size	Shaft Length	Overall Length	Price per ea.
92-0120-00	L-6	Black	3/16"	6"	9-1/8"	7.90
92-0119-00	L-8	Red	1/4"	6"	10-1/8"	7.90
92-0117-00	L-10	Amber	5/16"	6"	10-1/8"	7.90
92-0115-00	L-11	Green	11/32"	6"	10-1/8	8.34
92-0114-00	L-12	Blue	3/8"	6"	10-1/8"	8.34
92-0074-00	HS-6	Black	3/16"	3-1/8"	6-1/4"	6.38
92-0149-00	HS-7	Brown	7/32"	3-1/8"	6-1/4"	6.38
92-0210-00	HS-8	Red	1/4"	3-1/8"	7-1/4"	6.38
92-0148-00	HS-9	Orange	9/32"	3-1/8"	7-1/4"	6.38
92-0073-00	HS-10	Amber	5/16"	3-1/8"	7-1/4"	6.38
92-0147-00	HS-12	Blue	3/8"	3-1/8"	7-1/4"	6.76
92-0138-00	HS-14	Brown	7/16"	3-1/8"	7-1/4"	8.72
92-0133-00	HS-16	Red	1/2"	3-1/8"	7-1/4"	8.72

METRIC NUTDRIVERS

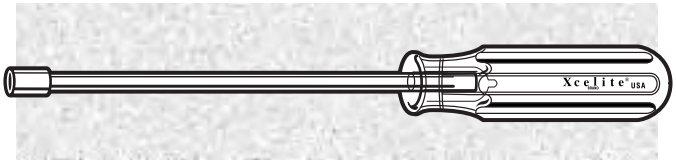

- Manufactured precisely to metric dimension
- Drilled shaft
- Black handles

Xcelite

Part Number	Ref. No.	Hex Size	Shaft Length	Overall Length	Price per ea.
92-0159-00	4MM	4mm	76mm	156mm	6.32
92-0158-00	4.5MM	4.5mm	76mm	156mm	6.88
92-0157-00	5MM	5mm	76mm	156mm	6.32
92-0156-00	5.5MM	5.5mm	76mm	156mm	6.32
92-0155-00	6MM	6mm	76mm	156mm	6.88
92-0154-00	7MM	7mm	76mm	156mm	6.32
92-0190-00	8MM	8mm	76mm	156mm	8.94
92-0188-00	10MM	10mm	73mm	178mm	7.72

"KEEP & CARRY" NUTDRIVER KIT

- 10 piece inch size kit
- Sturdy yellow plastic carrying case
- 7-1/4" overall length
- Contains hollow shaft No's. HS6, HS7, HS8, HS9, HS10, HS11, HS12, HS14, HS16 and HS18
- Ref. No. HS6-18

Part Number		Price per ea.
92-0163-00	"Keep And Carry" Nutdriver Kit	70.64

© HAPP CONTROLS

MAGNETIC NUTDRIVERS

- Ultimate in convenience for assembly and service involving hex operations
- Alnico permanent magnet inserted in socket holds fasteners firmly for easy, one-hand driving or for retrieving or removal
- Socket specially treated and hardened for use with self-tapping screws
- Unique Xcelite development effectively insulates magnet
- Comfortable handle provides adequate torque for one-hand driving
- Various lengths available

Part Number	Ref. No.	Hex Size	Blade Length	Color	Price per ea.
92-0118-00	L-8-M	1/4"	6"	Red	11.36
92-0116-00	L-10-M	5/16"	6"	Amber	11.36
92-0355-00	LL-8-M	1/4"	16-3/4"	Red	23.30

CLAW HAMMER

- Durable, black enamel finish on head
- Polished bell and striking face
- Hickory handle
- Permabond construction between head and handle
- Head weight 16 oz.
- 13" overall length
- Ref. No. 11460

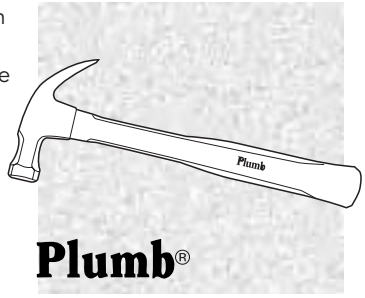

Part Number		Price per ea.
92-0009-00	Claw Hammer	14.20

BALL PEIN HAMMER

- Hickory handle
- Ground, black head
- Polished poles and peins
- Permabond construction between head and handle

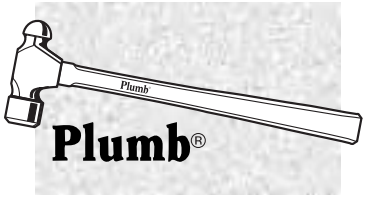

Part Number	Ref. No.	Weight	Overall Length	Price per ea.
92-0034-00	11494	4 oz.	10-1/2"	12.04
92-0036-00	11496	8 oz.	11-1/4"	12.92

BALL PEIN HAMMER

- Fiberglass handle with black grip cushion
- Forged black head with polished poles and peins
- Permabond construction between head and handle
- Head weight 16 oz.
- 12-3/4" overall length
- Ref. No. 11426

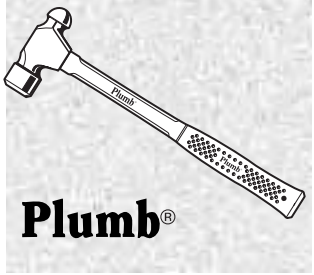

Part Number		Price per ea.
92-0033-00	Ball Pein Hammer	18.58

S.A.E. POWER NUTDRIVER BIT SET

- For Magna Tip screwdriver 1/4" shank
- Adaptable to 1/4", 3/8" and 1/2" chucks
- 7-piece set includes: 3/16", 1/4", 9/32", 5/16", 7/16", 3/8" and 11/32" nutdrivers
- Handy red plastic case

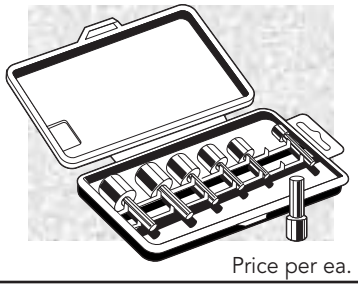

Part Number		Price per ea.
92-0223-00	S.A.E. Power Nutdriver Bit Set	11.20

6-BIT RATCHET SCREWDRIVER TOOL SET

- Multi-purpose screwdriver set
- Ratcheting handle
- Includes 6 bits: 3 flat, 3 cross
- Convenient bit holder built into handle
- Bright yellow comfort grip handle
- Flat bits: .12", .16", .24"
- Cross Bits: #1, #2, #3

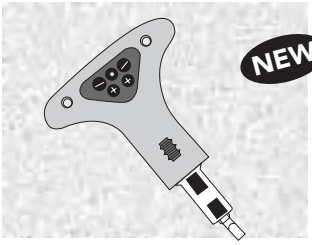

Part Number		Price per ea.
92-1355-00	6 Bit Screwdriver Tool Set	5.10

15 PIECE DELUXE DRILL BIT SET

- 1/4" round shank twist drills
- Reduced shanks on sizes above 1/4"
- Durable molded plastic case
- 1/16" center punch and full fractional drill range
- Includes sizes 1/16", 5/64", 3/32", 7/64", 1/8", 9/64", 5/32", 3/16", 7/32", 1/4", 5/16", 3/8", 7/16" and 1/2"

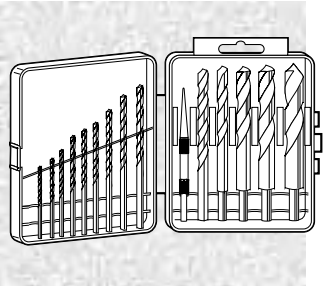

Part Number		Price per ea.
92-0027-00	Deluxe Drill Bit Set	29.99

MAGNIFYING FLUORESCENT WORK LAMP

NEW

- An excellent lamp for circuit board repair or rework
- Heavy duty for years of use
- 3x Magnifier lens for easy viewing
- Spring-balanced arm positions light where it's needed
- Clamps to bench or desktop
- 22 watt circular fluorescent lamp supplies shadow free light
- Lamp arms reach up to 45"
- UL listed
- 5 ft. cord

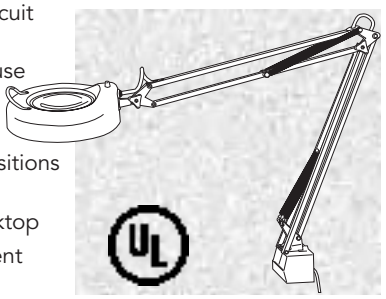

Part Number		Price per ea.
91-0202-00	Magnifying Flourescent Work Lamp	86.70

ECONOMY DRILL BITS

- Straight shank

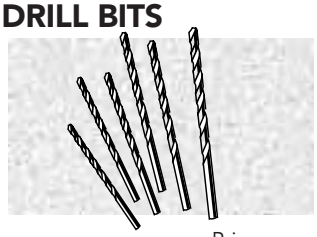

Part Number	Size	Price per ea.
92-0053-00	1/16"	.83
92-0051-00	5/64"	.83
92-0055-00	3/32"	.83
92-0056-00	7/64"	.83
92-0057-00	1/8"	.83
92-0058-00	9/64"	.83
92-0054-00	5/32"	.83
92-0059-00	3/16"	1.10
92-0060-00	13/64"	1.10
92-0052-00	7/32"	1.40
92-0061-00	1/4"	1.70
92-0062-00	3/8"	3.70

TAP AND DRILL SET

- Designed for electricians
- 13-Piece set holds carbon taps and matching HSS twist drills
- Housed in durable plastic case
- Includes 6 carbon plug taps: sizes 4-40, 6-32, 8-32, 10-24, 10-32, 1/4-20, 6 HSS twist drills-sizes 43, 36, 29, 25, 21, 7, and a T-handle wrench

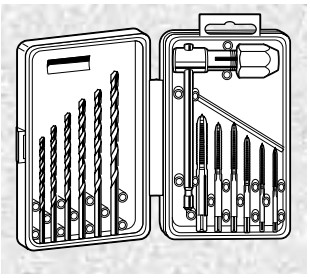

Part Number		Price per ea.
92-0080-00	Tap and Drill Set	26.05

6-PC JEWELERS SCREWDRIVER SET

- Precision screwdriver set
- Includes 2 Phillips blades (#1& #0) and 4 flat blades (1.4mm, 2.0mm, 2.4mm & 3.0mm)
- Housed in a sturdy plastic case

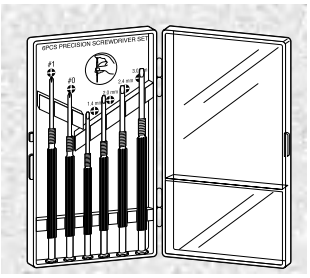

Part Number		Price per ea.
92-0072-00	6-pc Jewelers Screwdriver Set	5.10

TWO-IN-ONE STUBBY SCREWDRIVER

- Stubby handle
- 3/16" slotted tip end and No. 1 Phillips end
- Ref. No. TSD-1V

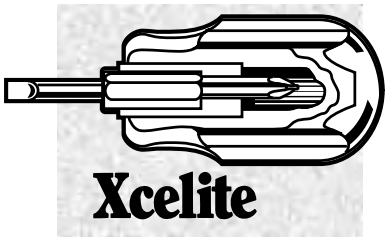

Part Number		Price per ea.
92-0088-00	Two-In-One Stubby Screwdriver	7.84

XCELITE SCREWDRIVERS

- Blades are AISI 6150 chrome vanadium steel, plated for protection

Flat Blade Type Part Number	Point Size	Shaft Length	Overall Length	Price per ea.
92-0173-00	1/8"	4"	6-5/8"	3.98
92-0172-00	1/8"	8"	12-5/8"	5.99
92-0171-00	5/32"	4"	6-5/8"	3.72
92-0170-00	3/16"	3"	6-5/8"	5.21
92-0169-00	3/16"	10"	13-5/8"	3.26
92-0166-00	1/4"	8"	12-1/8"	8.00
92-0165-00	5/16"	6"	10-1/2"	8.00

Phillips Type Part Number	Point Size	Shaft Length	Overall Length	Price per ea.
92-0176-00	1	3"	6-5/8"	4.96
92-0175-00	2	4"	8-1/8"	6.62
92-0174-00	3	6"	10-1/2"	9.26
92-0179-00	1	10"	13-5/8"	8.44
92-0178-00	2	10"	14-1/8"	10.80

HAPP CONTROLS 5" SCREWDRIVER

- Handy 5" screwdriver with reversible Phillips/Slotted head
- Rubberized handle give you a better grip, even with wet or greasy hands
- Pocket clip makes it easy to carry in your shirt pocket without losing
- Hex shaft with a metal socket
- Smaller size is ideal for those tiny, hard to get spots

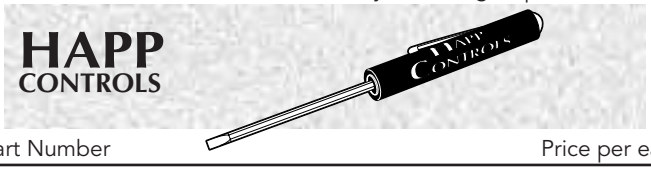

Part Number		Price per ea.
SCREWDRIVER HAPP	Happ Controls 5" Screwdriver with Reversible Phillips/Slotted Head	2.10

HAPP CONTROLS SCREWDRIVERS

- 5" long-great for hard to reach places
- Flat head or phillips head available
- Hardened steel for life
- A must for every toolbox
- Complete with pocket clip

Part Number		Price per ea.
92-0206-02	Flat Head Screwdriver	1.75
92-0206-01	Phillips Head Screwdriver	1.65

4-IN-1 POCKET DRIVER SET

- Compact driver set is ideal for technicians on the go
- Magnetized driver holds tips in place
- Pocket clip for shirt pocket
- Handle color: Red
- Size: 4-1/2" L x 5/8" diameter
- 3/8" nut driver with 7/32" slotted and #1 Phillips tips in the handle

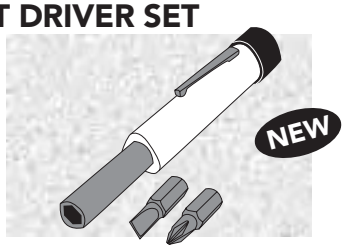

Part Number		Price per ea.
92-0369-00	4-In-1 Pocket	4.70

© HAPP CONTROLS

FLAT BLADE SCREWDRIVERS

- Cushion grip
- Various sizes and lengths

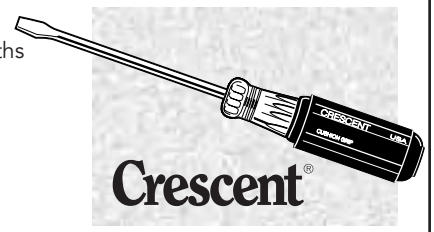

Part Number	Point Size	Shaft Length	Overall Length	Price per ea.
92-0122-00	1/4"	4"	8"	4.54
92-0123-00	1/4"	6"	10"	4.54
92-0217-00	3/16"	3"	6"	4.54
92-0125-00	3/16"	4"	8"	4.54
92-0126-00	3/16"	6"	10"	5.12
92-0127-00	3/16"	8"	12"	5.52
92-0128-00	3/16"	10"	14"	7.00

PHILLIPS SCREWDRIVERS

- Cushion grip
- Various sizes and lengths

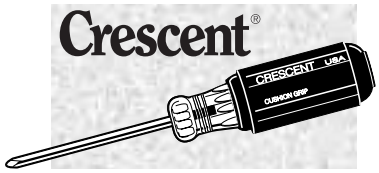

Part Number	Point Size	Overall Length	Blade Length	Price per ea.
92-0129-00	1	6-3/4"	3″	4.50
92-0262-00	2	8-3/8"	4″	5.04
92-0263-00	3	11"	6″	7.08

4-WAY POCKET TOOL

- Versatile time saver
- Double-ended handle serves as 2 sizes of nutdrivers, 7/16" and 1/4"
- Special reversible SB1 blade fits slotted or Phillips head screws
- Ref. No. 600V

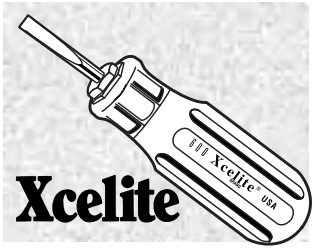

Part Number		Price per ea.
92-0187-00	4-Way Pocket Tool	12.22

FOUR-IN-ONE SCREWDRIVER

- Extra Handy Tool
- Converts in seconds to 3/16" and 1/4" slotted tips and #1 & #2 phillips tips
- Self storing standard shaft
- 2 blades interchangeable with two-in-one screwdriver
- Ref. No. FSD-IV

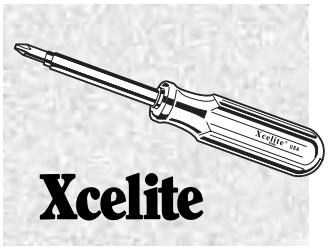

Part Number		Price per ea.
92-0266-00	4-Way Pocket Tool	12.92

10-IN-1 MULTIFUNCTIONAL SCREWDRIVER TOOL

NEW

- Light for illumination of the work area
- Velleman ref. no. VTBT10
- Rubber cushion grip
- Wall mounting bracket included
- Screwdriver with 10 bits (4-flat, 3-cross, 3-hex)
- Telescopic magnetic pick-up tool, suitable for picking up small metal objects
- Requires 2 AAA batteries (Not included)

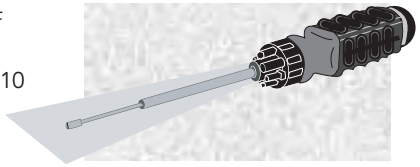

Part Number		Price per ea.	L/6
92-0357-00	10-in-1 Multifunctional Screwdriver Tool	5.20	4.70

STUBBY PHILLIPS SCREWDRIVER

- No. 2 Phillips tip
- 3-3/8" overall length
- Ref. No. SX-102

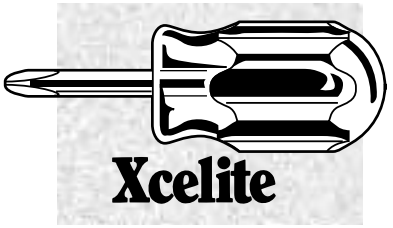

Part Number		Price per ea.
92-0145-00	Stubby Phillips Screwdriver	6.22

STUBBY FLAT BLADE SCREWDRIVER

- 1/4" flat blade
- 3-1/4" overall length
- Ref. No. S141

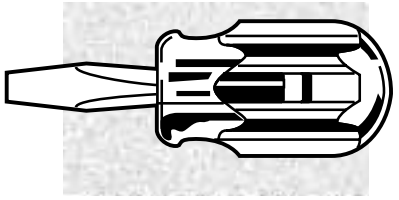

Part Number		Price per ea.
92-0144-00	Stubby Flat Blade Screwdriver	5.62

POCKET SIZE HEX KEY SETS

- Spring bar holds tool in place
- One piece steel case, heat treated 8650 alloy steel
- Folds up like a pocket knife

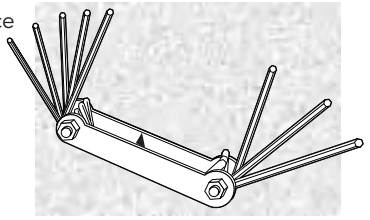

7-Piece Metric Key Set
Includes the following sizes: 1.5mm, 2mm, 2.5mm, 3mm, 4mm, 5mm and 6mm

Part Number		Price per ea.
92-0044-00	7-Piece Metric Hex Key Set	7.80

8-Piece S.A.E. Key Set
Includes the following sizes: .050, 1/16", 5/64", 3/32", 7/64", 1/8", 9/64" and 5/32"

Part Number		Price per ea.
92-0045-00	8-Piece S.A.E. Hex Key Set	7.80

9-Piece Large S.A.E. Key Set
Includes the following sizes: 5/64", 3/32", 7/64", 1/8", 9/64", 5/32", 3/16", 7/32" and 1/4"

Part Number		Price per ea.
92-0046-00	9-Piece S.A.E. Hex Key Set	10.40

MAGNA WHATCHA-CALLIT® KIT

- 29 piece driver and bit set
- Packaged in durable molded plastic case

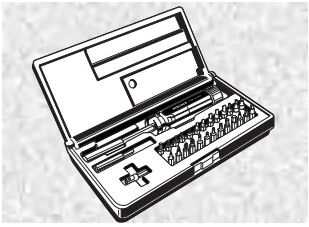

Includes	Length Inches	Bit/Point Size
Driver	7	1/4 (magnetic w/storage handle)
Phillips Bits	1	0,1, 2, 3
Slotted Bits	1	0-1, 3-4, 5-6, 8-10, 12
Allen Bits	1	5/64, 3/32, 7/64, 1/8, 9/64
Square Recess Bits	1	0, 1, 2, 3
TORX® Bits	1	T10, T15, T20, T25, T30, T40
POZIDRIV® Bits	1	1, 2
Socket Adapter	1	1/4
Bit Holder	1	1/4 (for use with power tools)

Part Number		Price per ea.
92-0100-00	Magna Whatcha-Callit Kit	41.65

29-PIECE DRIVER AND BIT SET

- 29-piece driver and bit set
- Packaged in durable molded plastic case

Includes	Length Inches	Bit/Point Size
Driver	7	1/4 (magnetic w/storage handle)
Phillips Bits	1	0,1, 2, 3
Slotted Bits	1	3, 5, 7/32, 9/32
Allen Bits	1	5/64, 3/32, 7/64, 1/8, 9/64
Square Recess Bits	1	0, 1, 2, 3
TORX Bits	1	T10, T15, T20, T25, T30, T40
POZIDRIV Bits	1	1, 2, 3
Socket Adapter	1	1/4
Bit Holder	1	1/4 (for use with power tools)

Part Number		Price per ea.
92-0100-10	29-Piece Driver and Bit Set Kit	31.25

TAMPER-RESISTANT TORX® WRENCHES

- A must for every toolbox
- Torx® is a registered trademark of Camcar Div. of Textron Inc.

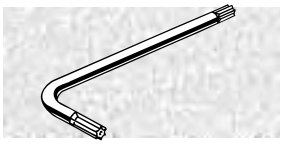

Part Number		Price per ea.	L/6
49-0452-00	Torx® T-10 Wrench	6.10	5.45
49-0107-00	Torx® T-15 Wrench	6.10	5.45
49-0049-00	Torx® T-20 Wrench	6.10	5.45
49-0048-00	Torx® T-25 Wrench	6.10	5.45
49-0520-00	Torx® T-27 Wrench	6.10	5.45
49-0537-00	Torx® T-30 Wrench	6.10	5.45
49-0538-00	Torx® T-40 Wrench	6.10	5.45

MAGNETIC SCREWDRIVER

- Industrial quality screwdriver
- Magnetic shank with flip top cap
- 1/4" Hex insert bit
- Includes 4 bits in handle - Phillips #1, #2 and Flat #4 , #6

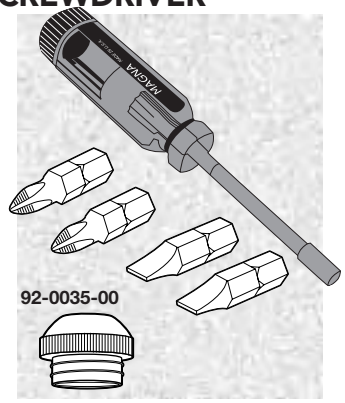

Part Number		Price per ea.
49-0585-00	7" Magnetic Screwdriver with 4 Bits	10.15
49-0586-00	11" Magnetic Screwdriver with 4 Bits	13.25
92-0035-00	Replacement Screw Cap	.99

SCREWDRIVER BITS

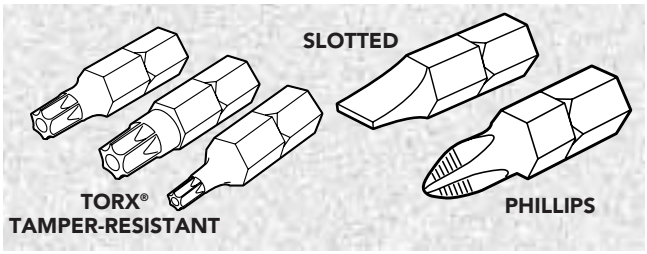

- Ideal for screw guns, cordless and electric drills
- Tough, fracture-resistant tips
- Made in the USA
- Torx® is a registered trademark of Camcar Div. of Textron Inc.

Part Number	Type	Price per ea.
92-0030-00	#0 Phillips	1.30
49-0632-00	#1 Phillips	1.30
49-0633-00	#2 Phillips	1.30
92-0017-00	#2 Phillips, 3 Inch Long	1.70
92-0021-00	#2 Phillips, 2 Inch Long	1.70
49-0634-00	#3 Phillips	1.30
49-0635-00	#3 - 4 Straight Slotted	2.50
49-0636-00	#5 - 6 Straight Slotted	1.55
49-0637-00	#6 - 8 Straight Slotted	1.55
49-0638-00	#8 - 10 Straight Slotted	1.55
49-0639-00	#10 - 12 Straight Slotted	1.55
49-0574-T10	Torx® T-10 Tamper-Resistant Bit	2.50
49-0574-T15	Torx® T-15 Tamper-Resistant Bit	2.50
49-0574-T20	Torx® T-20 Tamper-Resistant Bit	2.50
49-0574-T25	Torx® T-25 Tamper-Resistant Bit	2.50
49-0574-T27	Torx® T-27 Tamper-Resistant Bit	2.50
49-0574-T30	Torx® T-30 Tamper-Resistant Bit	2.50
49-0574-T40	Torx® T-40 Tamper-Resistant Bit	2.50
92-0151-00	Torx® T-9 Bit	2.50
92-0264-00	Torx® T-20 Bit	2.50
92-0261-00	Torx® T-25 Bit	2.50

TAMPER-RESISTANT TORX® WRENCH SET

- 6-piece set
- Contains one each T-10, T-15, T20, T-25, T-27, T-30
- Torx® is a registered trademark of Camcar Div. of Textron Inc.

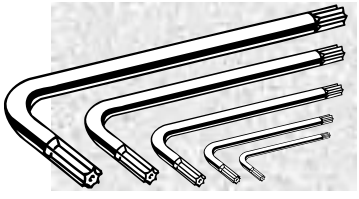

Part Number		Price per ea.
49-0709-00	Tamper-Resistant Torx® Wrench Set	20.85

TAMPER-RESISTANT STAR BIT SET

- For tamper-resistant star fasteners
- Tempered, precision-machined tips
- Includes 7 bits: T-10, T-15, T-20, T-25, T-27, T-30, T-40
- Complete with PVC organizer

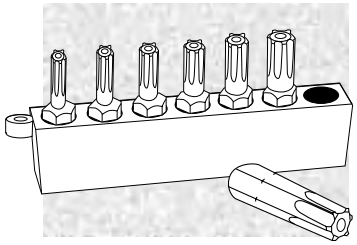

Part Number		Price per ea.
49-0710-00	Tamper-Resistant Star Bit Set	5.20

BIT HOLDER FOR HEX INSERT BITS

- Magnetic 1/4" bit holder

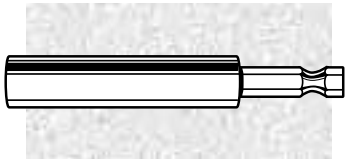

Part Number		Price per ea.
92-0016-00	2-7/8" Length	9.70
92-0050-00	6" Length	16.95

1/4" MALE ADAPTER

- Adapts screwdrivers and drills to drive sockets

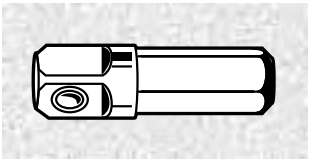

Part Number		Price per ea.
92-0015-00	1/4" Male Adapter	4.85

UTILITY KNIFE

- Fully retractable blade with slide stop operation
- 3 blade positions - full, one-half and one quarter
- Aluminum handle is contoured to fit the palm of the hand
- Includes 3 heavy duty blades
- Extra blades can be stored in the handle

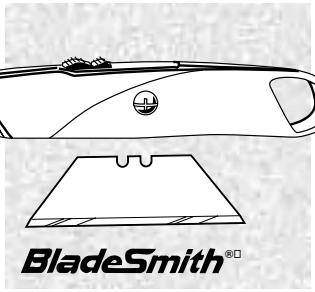

Part Number		Price per ea.
92-0040-00	Utility Knife	3.75

UTILITY KNIFE BLADES

- Heavy Duty
- Sold in packages of 5

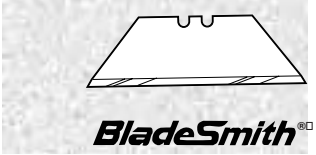

Part Number		Price per pkg.
92-0014-00	Utility Knife Blades	1.55

MINI RAZOR BLADE HOLDER AND SCRAPER

- Blade easily snaps in and out
- Blade can be stored upside down for safety
- Holds blade securely for scraping jobs
- Includes one blade

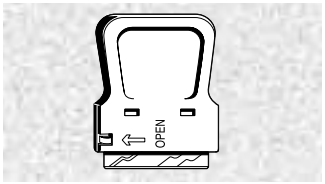

Part Number	Description	Price per ea.
49-5053-00	Mini Razor Blade Holder and Scraper	1.15

RAZOR BLADES

- Single edge
- Industrial quality
- Sold 100 per box

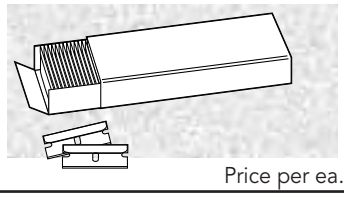

Part Number		Price per ea.
49-0926-00	Razor Blades	7.30

SAFETY GLASSES WITH ADJUSTABLE FRAME

- Economical, wrap-around styling with integral sideshields and nosebridge
- Impact resistant lenses treated with Duramass® scratch-resistant coating
- Adjustable temple length
- Unique fully-adjustable, five-position ratchet-action temples
- Clear polycarbonate lenses filters out 99.9% of harmful UV light
- Meets CSA Z94.3
- Meets ANSI Z87.1-1989
- Black frame

Part Number		Price per ea.
92-0136-01	Safety Glasses	5.99

GENERAL PURPOSE DC POWER SUPPLY

- 30-volt variable power supply
- It features dual panel meters, volts, and amps, coarse and fine voltage adjustment, hi-lo current with min/max control, and a dual amp scale meter
- 117V AC 60 Hz input and a 0-30V DC output with 0-5 amp regulation
- It has overload and short circuit protection, low ripple of 0.5mV RMS, current limiting 0-5 amps, single output heavy duty binding posts for (+) (-) ground, and a heavy duty 3 prong power cord

Technical Specifications

Frequency Range N/A Input 117V AC / 60 Hz Output 0.30V DC - 0-5 Amp Regulated Weight 10 lbs
Size 6-1/4"(H) X 8-1/2"(W) X 10"(D)

Part Number		Price per ea.
32-0463-00	General Purpose DC Power Supply	249.90

4-POCKET HOLSTER

NEW

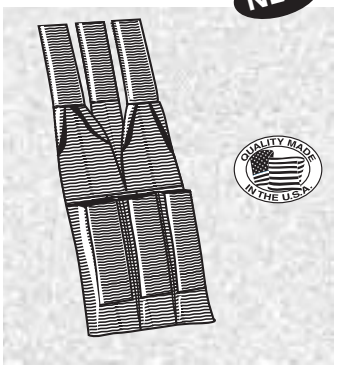

- Clip-on 4-pocket holster for mini-flashlight, tools, marker, etc.
- Made in the USA
- Overall size: 4" X 4"
- 3 small pockets and 1 large pocket in back
- Constructed from tuff poly webbing and a plated spring steel clip
- Easily worn with or without a belt
- Spring-loaded metal belt clip on back

Part Number		Price per ea.
92-0564-00	4-Pocket Holster	19.75

GLOVE POUCHES

- Made of black cordura nylon
- 2-1/2" low profile belt loop

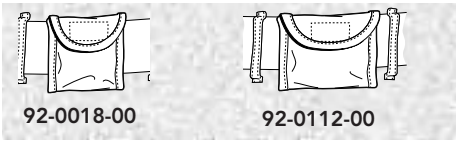

Part Number		Price per ea.
92-0018-00	3-1/2" x 3-1/2 Standard Glove Pouch	6.15
92-0112-00	4" x 4" Large Glove Pouch	7.30

MINI-FLASHLIGHT SHEATH

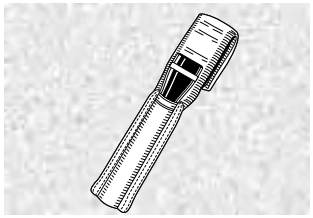

- Holds mini-flashlight uncovered
- Made of black durable nylon
- Sewn down belt loop
- Unaffected by water, oil or mildew
- Flashlight not included

Part Number		Price per ea.
92-0227-00	Mini-Flashlight Sheath	4.80

NYLON FLASHLIGHT HOLDER FOR LIGHTWAVE 2000™

NEW

- Made of durable black nylon
- Attaches to belt with included loop on back
- Fold over flap holds the flashlight securely in the holder
- Resists water, oil and mildew
- Made in USA

Part Number		Price per ea.
49-6119-10	Nylon Flashlight Holder with Belt Clip	15.10

LARGE TOOL HOLDER

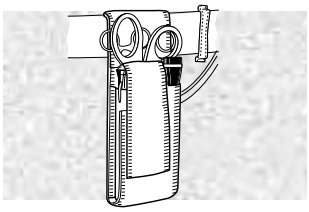

- 3 large pockets
- Extra space for additional tools
- Made from heavy duty black nylon Cordura
- Fits on tool belt

Part Number		Price per ea.
92-0012-00	Large Tool Holder	14.60

SECURITY POUCH

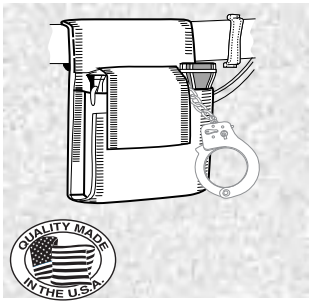

- 3 large pockets hold: 1 set handcuffs, 2 pair latex gloves, 1 Mag-lite, 2 pens or 1 marker, 1 log book
- Fits on web belts
- Made in the USA from heavy duty black nylon Cordura®
- Size: 8" (L) x 4" (W) x 1-1/2" (D)
- May also be used as a tool holder
- Handcuffs and tools not included

Part Number		Price per ea.
92-0289-00	Security Pouch	16.70

DELUXE TOOL SHEATH

- Holds Mini-flashlight, pens, screwdriver, shears, etc.
- Easily attaches to belt with loop on back
- Made of heavy duty black nylon

Part Number		Price per ea.
92-0031-00	Deluxe Tool Sheath	10.40

BASIC TOOL SHEATH

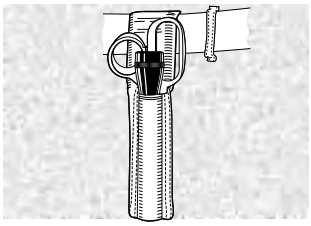

- Holds scissors and mini-flashlight
- Made from black polypro web

Part Number		Price per ea.
92-0020-00	Basic Tool Sheath	6.05

LARGE SLOT MACHINE POUCH

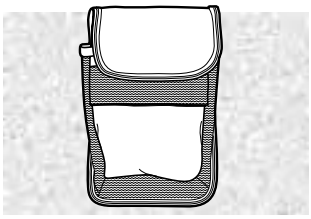

- 6" W x 8-1/2" H
- 2 pockets
- Black Imperial nylon
- Large belt loop sewn on back

Part Number		Price per ea.
92-0111-00	Large Slot Machine Pouch	20.85

HORIZONTAL TOOL POUCH

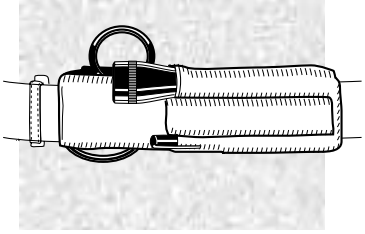

- Mounts horizontally on your belt
- Holds pen, screwdriver, scissors, etc.
- Durable nylon web construction

Part Number		Price per ea.
92-0013-00	Horizontal Tool Pouch	10.40

© HAPP CONTROLS

MOLEX PIN EXTRACTOR TOOLS

- Spring-loaded tool to allow easy removal of Molex pins from connector
- A must for every toolbox
- For servicing of Molex connectors

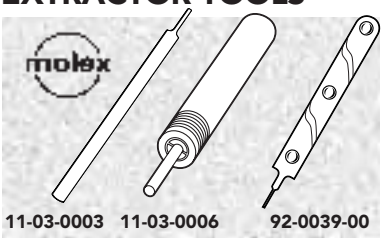

Part Number	Description	Molex Ref. No	Price per ea.
11-03-0006	Molex Extractor Tool for .093" Pins	11-03-0006	19.80
11-03-0002	Molex Extractor Tool for .062" Pins	11-03-0002	19.80
11-03-0003	Molex Extractor Tool for .156" Pins	11-03-0003	10.35
92-0039-00	Molex Extractor Tool for .165" Pins	11-03-0044	26.05

WELLER CORDLESS GLUE GUN G150

NEW

- Cordless for ultimate portability
- Self-igniting with push-button ease and convenience
- Uses standard 1/2" glue sticks
- Ergonomically designed for maximum comfort
- Patented magnetic thermostat controls gas usage for optimal performance

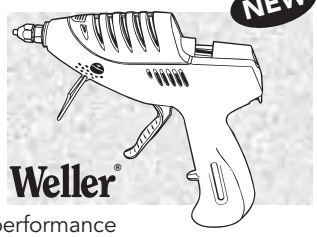

- Performance grip and trigger for accurate flow control
- Self-venting gas fill valve affording a 30 second refill
- Cooled exhaust gas port and ventilated heat chamber
- Operator controlled gas On/Off valve
- Ignition view window glows when the unit is operating
- Rectractable stand allows the gun to stand on its own
- Gas level window lets you see exactly how much gas is left
- Lightweight, only 10.7 oz
- Generates up to 175 watts with a melt rate of 2.5 lbs/hour
- Gas capacity allows up to 2-3 hours of continuous use
- Butane sold separately (29-1055-00)

Part Number		Price per ea.
92-0359-00	Weller Cordless Glue Gun G150	59.99
29-1055-00	Butane Refil 3 oz	7.10

GLUE STICKS

- 8" glue sticks
- Pack of 20

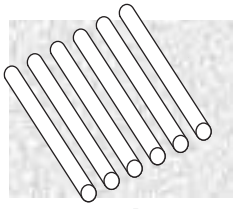

Part Number		Price per ea.
29-1145-00	Glue Sticks (Pack of 20)	5.20

FLEXSTONE FILES

- For filing electrical contact points
- 4-1/4" long

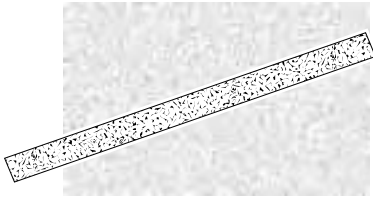

Part Number		Price per ea.
43-0686-00	Fine Grit	2.00
43-0687-00	Medium Grit	2.00

METAL BURNISHER

- For burnishing electrical contacts
- 4" long

Part Number		Price per ea.
43-0579-00	Metal Burnisher	2.20

SPRING HOOK & SCRIBE

- Double fixed-point scribe
- One straight point and one curved hook
- Overall length of 8"

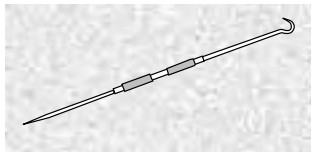

Part Number		Price per ea.
49-0655-00	Spring Hook & Scribe Tool	4.15

LUFKIN QUIKREAD POWER RETURN TAPE

- Easy-to-read vertically numbered tape measure
- Graduations printed in fractions and decimal equivalents to help you make quick readings
- Rounded case fits your hand fits for comfort
- Patented Lufkin "Quad Hook" extends blade life
- Positive toggle lock holds blade in place for dependable measurements

- Durable ABS case withstands rugged use on the job site
- Rubber bumper absorbs shock when blade is returned, extending blade life
- Graduations protected by tough clear-coat protectant
- 3" base for convenient inside measurements
- 25' L x 1" W blade for greater standout
- Made in USA

Part Number		Price per ea.
92-0360-00	Lufkin Quikread Power Return Tape	19.99

XCELITE XP1 CORDLESS DRIVER KIT

- This Kit contains a driver, battery, charger, 3 bits and 1 adapter.
- Multi-stage clutch
- 2 Speed control. Low speed of 180 and high speed of 360 RPMs
- UL and cUL approved charger
- Motor: 3.6V DC
- Max. Clutch torque: Low 28.5 in. lbs., High 14 in. lbs.
- Overall Length: 10.8"
- 3.6V Nickel-Cadmium battery
- Battery charger for a quick 1 hour charge
- UL and cUL approved charger
- Includes 3 bits, 2 Phillips and 1 slotted

Part Number		Price per ea.
92-0993-00	Xcelite XP1 Cordless Driver Kit	144.00
92-0994-00	Replacement Battery	32.30

GENERAL DUTY SOLDERING KIT

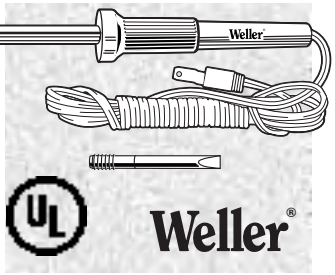

- For the professional
- Kit contains SP23 iron; MT1, MT2, MT3, 1/8" / 3mm diameter pre-tinned tips of nickel plated copper; lead free solder and soldering aid tool
- UL Listed
- Ref. No. SP23LK

Part Number		Price per ea.
94-0023-00	General Duty Soldering Kit	23.72

Replacement Tips

Part Number	Ref. No	Description	Price per ea.
92-0214-00	MT1	Cone Shaped Tip	4.96
94-0253-00	MT2	Screwdriver Tip	4.96
92-0254-00	MT3	Chisel Tip	4.96

WELLER SOLDERING IRONS

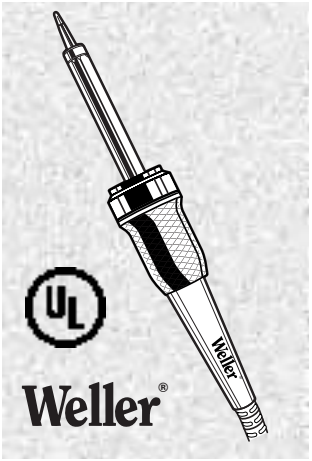

- Professional quality
- 7-7/8" / 200mm long
- Small and lightweight
- Uses ST series long life double-coated iron-plated tips
- Quick change knurled collar
- Stainless steel barrel
- Light blue with cushion grip handle and plug in heating element
- 3 different heating elements are available
- 6 ft. 3-wire cord
- UL Listed

Part Number	Description	Watt	Price per ea.
94-0025-00	Ref.No WP25	25	45.46
94-0035-00	Ref.No WP35	35	57.24

REPLACEMENT SOLDERING TIPS

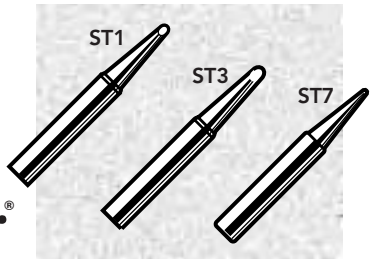

- For Weller WP25 and WP35 solder irons
- ST series tips
- Precision ground copper tips are plated with iron, nickel and chromium

Part Number	Ref. No	Tip Size & Description	Price per ea.
94-0001-00	ST1	1/16" Screwdriver Tip	6.40
94-0003-00	ST3	1/8" Screwdriver Tip	6.40
94-0007-00	ST7	1/32" Conical Tip	6.40

SPONGE FOR SOLDERING STATION

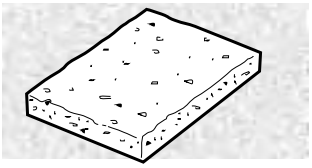

- Replacement Sponge sold in eaches
- Ref. No. 455

Part Number		Price per ea.
94-0106-00	Sponge for Soldering Station	2.99

PORTASOL SOLDERING KIT

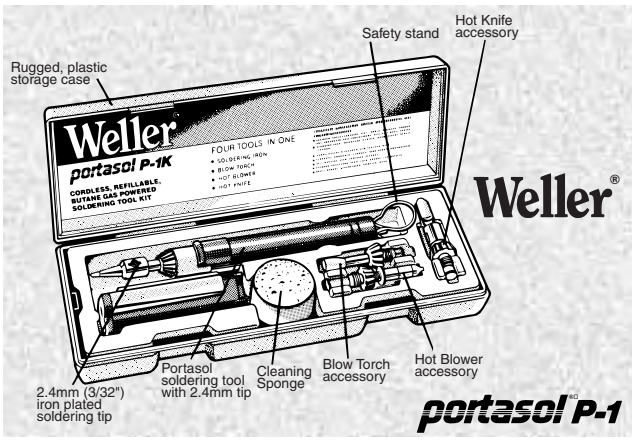

- Does not require cords, batteries or cartridges
- Patented soldering tool has a catalytic converter that provides a powerful yet safe flameless combustion
- Refills with butane lighter gas
- Develops 850° F/ 454° C
- Kit contains Portasol P-1 soldering tool, 3/32 in. / 2.4mm iron-plated soldering tip, hot knife accessory, hot blower accessory, blow torch accessory, cleaning sponge and safety stand
- Ref. No. P-1KC

Part Number		Price per ea.
92-0277-00	Portasol Soldering Kit	66.66

PORTASOL BUTANE SOLDERING IRON

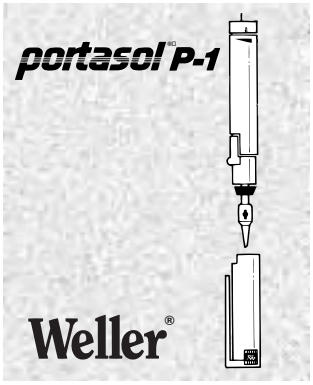

- Cordless, refillable butane gas-powered soldering equipment
- Does not require cords, batteries or cartridges
- Patented soldering tool has a catalytic converter that provides a powerful yet safe flameless combustion
- Packed in a rugged plastic case
- Ref. No. P-1

Part Number		Price per ea.
92-0194-00	Portasol Butane Soldering Iron	41.50
29-1055-00	Butane Refill, 3 oz.	7.10

REPLACEMENT TIPS

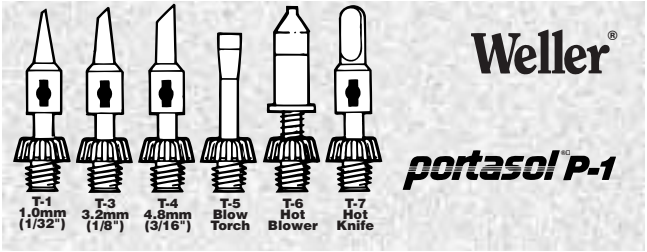

Part Number	Ref. No	Size	Price per ea.
92-0252-00	T-1	1.0mm Pro Tip	12.86
92-0192-00	T-3	3.2mm Pro Tip	12.86
92-0191-00	T-4	4.8mm Pro Tip	12.86
92-0245-00	T-5	Blow Torch	12.86
92-0244-00	T-6	Hot Blower	12.86
92-0207-00	T-7	Hot Knife	12.54

© HAPP CONTROLS

WELLER ELECTRONIC SOLDERING STATION

- Electronically controlled station
- Ideal for continuous production soldering or occasional use
- Features a new heater and sensor design that allows for quick heat-up and recovery
- Wireless temperature lockout to prevent operators from raising the temperatures to higher levels than specified
- Wireless tip temperature calibration provides capability of resetting station temperature readings to variations in tip sizes and styles
- Slim, comfortable hand piece reduces operator fatigue
- ESD safe to protect sensitive components
- 120 volts, 60 watts
- UL listed
- Ref. No. WES51

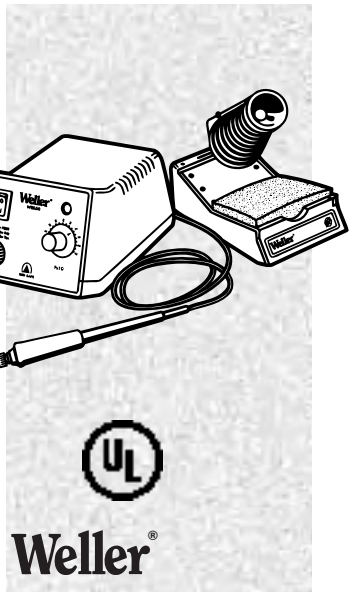

Part Number		Price per ea.
92-0213-00	Weller WES51 Soldering Station	156.98

REPLACEMENT PARTS FOR WELLER WES50 AND WES51 ELECTRONIC SOLDERING STATION

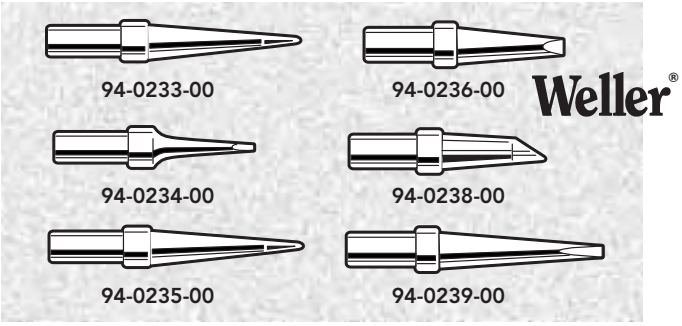

Part Number	Ref. No	Description	Price per ea.
94-0234-00	ETR	1/16" Narrow Tip	6.82
94-0233-00	ETS	1/64" Conical Tip	6.82
94-0238-00	ETDD	3/16" Flat Tip	6.82
94-0235-00	ETO	1/32" Conical Tip	6.82
94-0236-00	ETA	1/16" Screwdriver Tip	6.82
94-0239-00	ETK	3/64" Long Screwdriver Tip	6.82

SOLDERING TOOL STAND

- Soldering tool stand with base sponge and iron holder
- Compatible with Weller W60P, WP25, WP30, WP35 and irons with barrel diameters up to 15/32"/ 11.90mm
- Ref. No. PH60

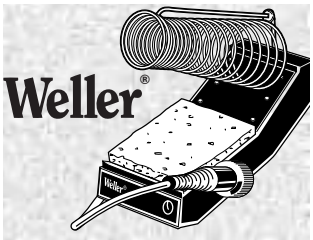

Part Number		Price per ea.
94-0280-00	Soldering Tool Stand	28.26

UNIVERSAL SOLDERING GUN

- All Purpose Solder Gun
- Fingertip trigger selection of high or low output from instant-heat gun-ready to solder in 6 seconds
- High efficiency tin plated, pure copper tip
- Compact, balanced pistol-grip design
- Soldering hints booklet included
- 2-wire cord
- UL listed
- 120 volt, 50/60 Hz, 140/100 watts
- Ref. No. 8200

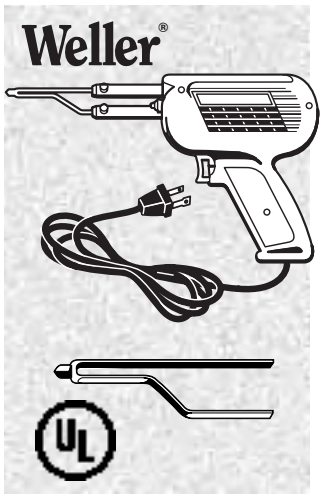

Part Number		Price per ea.
94-8200-00	Universal Soldering Gun	47.10
94-7135-00	Replacement Soldering Tip, card of 2	5.32

MANUAL DESOLDERING PUMPS

- Removes molten solder from printed circuit boards and electronic components
- Plunger seal spring creates extremely strong suction
- Antistatic Teflon tips that screw into the body to ensure that the strong vacuum is maintained
- Tool features push button plunger release and lightweight aluminum body that withstands high temperatures
- Tips unscrew to allow easy removal of accumulated solder debris

Part Number	Ref. No	Description	Price per ea.
94-0201-00	7881	Desoldering Pump w/.125" Tip	37.40
94-0203-00	7883	Replacement 0.125" Tip	9.50
94-0200-00	7874B	Desoldering Pump w/0.07" Tip	26.12
94-0202-00	7875B	Replacement 0.08" Tip	5.56

SOLDER POPPER

- Combines a snap-vacuum solder removal tool with a 30 watt soldering iron for fast, one hand operation
- Excellent tool for field repair or production work
- Tightly sealed vacuum pump snaps up all of the solder quickly
- Removable reservoir stores solder
- Long life tip unscrews for easy replacement

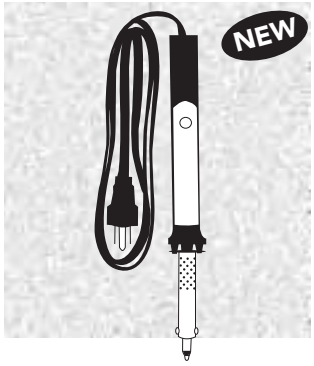

Part Number		Price per ea.
92-0759-00	Solder Popper	34.35

CONTROLLED OUTPUT SOLDERING STATION

- Transformer powered soldering station complete with macro style, low voltage, temperature controlled soldering iron
- Special "closed loop" method of controlling maximum tip temperature.....to protect temperature sensitive components
- Quick disconnect plug for soldering iron and lighted on/off switch
- Separate conductor grounds iron tip and terminates at third pin of power cord
- UL listed
- 120 volts, 60 watts, 60 Hz
- Ref. No. WTCPT

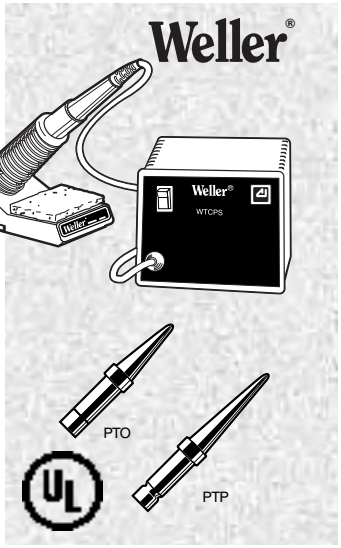

Part Number		Price per ea.
94-0092-00	Controlled Output Soldering Station	181.34

Replacement Parts for WTCPT Soldering Station

Part Number	Ref. No	Description	Price per ea.
94-0245-00	EC234	Heater Assembly	21.14
94-0210-00	TC201T	Solder Iron with Tip	92.02
94-0106-00	455	Sponge	2.99
94-0060-00	SW60	Switch Assembly	34.52

REPLACEMENT SOLDER TIPS FOR WTCPT STATION

- Heavy iron plated, precision ground PT series tips
- Provide maximum heat transfer from heater to tip

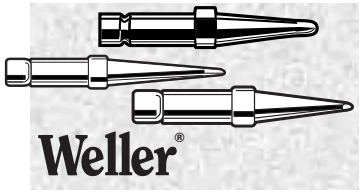

Part Number	Ref. No	Description	Price per ea.
94-0264-00	PTP6	6000 F Conical Tip	7.24
94-0093-00	PTP7	7000 F Conical Tip	7.24
94-0094-00	PTA7	7000 F Screwdriver Tip	7.24
94-0263-00	PTO7	7000 F Long Conical Tip	7.24
94-0095-00	PTA8	8000 F Screwdriver Tip	7.24

EC1301 SOLDER PENCIL

- Replacement pencil for EC3000 Soldering Station
- Ref. No. EC1301

Part Number		Price per ea.
92-1301-00	EC1301 Solder Pencil	132.00

REPLACEMENT EC1301 TIPS

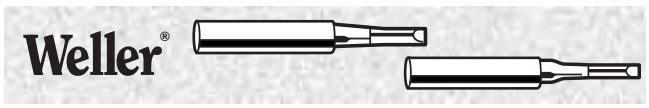

Part Number	Ref. No.	Size	Reach	Type	Price per ea.
94-1306-00	EPH106	1/16"	7/16"	Screwdriver	7.16
92-1307-00	EPH107	5/64"	7/16"	Screwdriver	7.16

WELLER ELECTRONIC CONTROLLED SOLDERING STATION

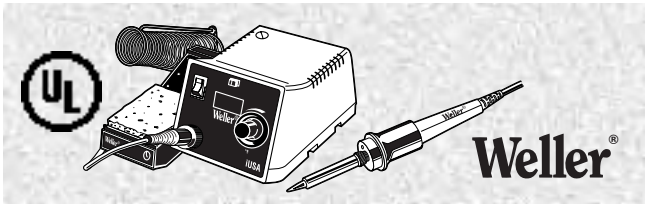

- LED readout displays temperature settings and tip temperature with a resolution of 1° F and stability of plus or minus 10° F
- Display shows "Read" mode by default which displays current temperature of the tip
- To switch to "Set" mode, turn knob slightly, display will show current set temperatures
- Handles delicate applications
- Electrostatic discharge safe (ESD safe)
- 40 watt iron with ETA tip and stand
- Water reservoir keeps sponge moist
- Externally fused
- UL listed and FCC approved
- 120 volts, 60 watts, 60 Hz
- 24 VAC isolated voltage is used to drive the heating element
- Ref. No. EC2002M1

Part Number		Price per ea.
92-2000-00	Weller Electronic Controlled Soldering Station	468.92

Replacement Parts

Part Number	Ref. No	Description	Price per ea.
94-0229-00	EC229A	Sensor	66.46
94-0208-00	TC208	Heater Assembly	30.84
94-1201-00	EC1201A	Solder Iron	134.34
94-0419-00	BA60	Barrel Nut	7.62
94-0106-00	455	Sponge	2.99

Replacement Tips

Part Number	Ref. No	Description	Price per ea.
94-0234-00	ETR	1/16" Screwdriver Tip	6.82
94-0233-00	ETS	1/64" Conical Tip	6.82
94-0238-00	ETDD	3/16" Single Flat Tip	6.82
94-0235-00	ETO	1/32" Conical Tip	6.82
94-0236-00	ETA	1/16" Screwdriver Tip	6.82
94-0239-00	ETK	3/64" Long Screwdriver Tip	6.82

SOLDER PEN

- Handy disposable dispenser with pocket clip
- 12-1/2' of .032 diameter solder
- 60% tin 40% lead, with rosin core

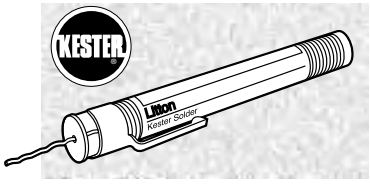

Part Number	Description	Price per ea.	L/6
29-1035-00	Solder Pen	2.05	1.85

SOLDER SPOOL

- Activated rosin core solder offers excellent wetting action
- Completely non-corrosive and electrically non-conductive
- 60% tin 40% lead
- 1 lb. spool of solder

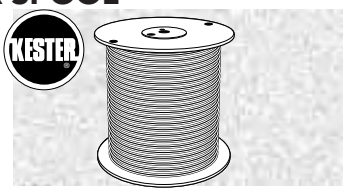

Part Number	Diameter	Description	Price per ea.
29-1152-00	0.62	Kester "44"	14.25
29-1050-00	0.31	Kester "44"	14.55

© HAPP CONTROLS

DS600 PORTABLE DESOLDERING STATION

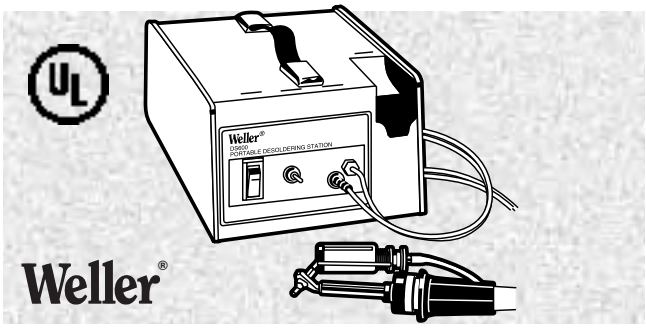

- Self-contained vacuum system requires 120 volts 60 Hz A.C. power source
- Designed for use in service applications where portability or a lack of a suitable air source requires a self contained unit
- Conveniently placed push button allows right or left handed operation
- Desoldering head temperature controlled to 700F included
- Carrying handle
- Power cord storage
- Built in iron holder
- UL listed
- Weighs 11 lbs.
- Ref. No. DS600

Part Number		Price per ea.
94-0600-00	DS600 Portable Desoldering Station	1,144.70

Replacement Parts

Part Number	Ref. No	Description	Price per ea.
94-0601-00	DS601P	Desoldering Iron	290.52
94-0103-00	DS103	Collect Tube with Gas	12.10
94-0104-00	DS104	Clean-out Tool	13.08
94-0106-00	455	Sponge	2.99
94-0245-00	EC234	Heater Assembly	21.14
94-0060-00	SW60	Switch Assembly	34.52
94-0205-00	DS205	Inline Filter	9.86
94-0607-00	DS607	Check Valve	6.30
94-0204-00	DS204	Filter	2.46
94-0209-00	DS209	Cleaner Kit	13.04
94-0218-00	DS218T	Desolder Head	111.16
94-0316-00	EC219	Rocker Switch	20.32
92-0610-00	DS610	Handle Assembly	33.04

PROWICK® DESOLDERING BRAID

- Advanced braid design works instantly to pull in excess solder
- Pure copper braid construction enhances wicking action
- Mildest non-activated white rosin flux ensures safe, clean operation
- Vacuumed-packaged for longer shelf life

Part Number		Width	Length	Price per ea.
80-0012-00	#1 White Fine Braid	.035″	5′	2.05
94-0010-00	#1 White Fine Braid	.035″	25′	8.85
80-0016-00	#2 Yellow Fine Braid	.055″	10′	3.75
80-0017-00	#2 Yellow Fine Braid	.055″	25′	8.85
80-0022-00	#3 Green Fine Braid	.075″	5′	2.05
80-0018-00	#3 Green Fine Braid	.075′	10′	3.85
80-0020-00	#3 Green Fine Braid	.075′	25′	8.85
80-0040-00	#4 Blue Fine Braid	.098″	5′	2.25
80-0030-00	#4 Blue Fine Braid	.098″	10′	4.20
80-0034-00	#4 Blue Fine Braid	.098″	25′	9.15
80-0023-00	#4 Blue Fine Braid	.098″	100′	35.35

DS800 DESOLDERING STATION

- Electronically controlled desoldering station
- Self-contained – Internal rotary vane pump eliminates the need for shop air
- High performance makes the DS800 ideal for continuous production desoldering and demanding multi-layer applications
- Vacuum controlled by convenient easy-to-use index finger push button
- Complete range of DS series desoldering tiplets available
- Unite comes with DS1203A desoldering tool, 5 tiplets, stand, sponge, and clean-out tool
- UL and CUL listed
- ESD safe
- Ref. No. DS800
- 120 volts, 60 Hz

Part Number		Price per ea.
92-0800-00	DS800 Desoldering Station	1,384.74

Replacement Parts

Part Number	Ref. No	Description	Price per ea.
94-0103-00	DS103	Collectable Tube w/Gasket	12.10
94-0209-00	DS209	Tiplet Cleaning Set	13.04
94-0229-00	EC229A	Sensor Assembly	66.46
94-0204-00	DS204	Filter	2.46

REPLACEMENT TIPLETS FOR DS600 AND DS800

- Stainless steel liner brazed to tiplet for better heat transfer
- Iron, nickel and chrome plated, then tinned tiplet

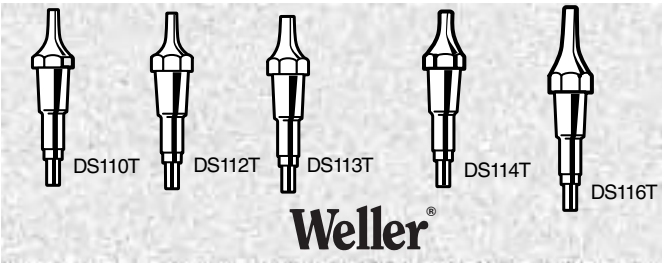

Part Number	Ref. No.	OD	ID	Reach	Price per ea.
94-0110-00	DS110T	.062"	.024"	.50"	16.12
94-0112-00	DS112T	.078"	.031"	.50"	16.12
94-0113-00	DS113T	.093"	.046"	.50"	16.12
94-0114-00	DS114T	.125"	.073"	.50"	16.12
94-0116-00	DS116T	.093"	.043"	.75"	16.12

DESOLDERING BRAID

- 5′ spools
- Pure copper

Part Number	Color Code	Width	Price per ea.
29-1149-00	Yellow #2	.025″	3.15
29-1046-00	Gold #2	.050″	3.15
29-1148-00	Green #3	.075″	3.15
29-1147-00	Blue #4	.100″	3.15

HAKKO 936 SOLDER STATION

- Compact unit; takes up little space on the workbench.
- Soldering irons have thinner grips for easier use.
- Lock screw prevents inadvertent changes to the temperature setting.
- Power consumption: 60W

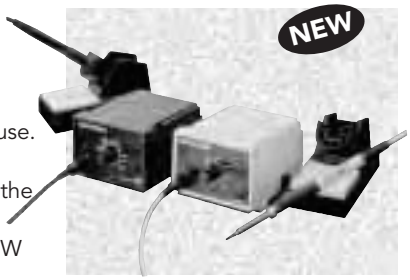

HAKKO

Station

Output Voltage	24V AC
Temperature	200°C - 480°C (392°F - 896°F)
Temperature Stability	±1.0°C (1.8°F)
Outer Dimensions (w/o cord)	120(W) x 93(H) x 170(D) mm 4.7(W) x 3.7(H) x 6.7(D) in.
Weight (w/o cord)	Approx. 1.3 kg (2.9 lbs)

Iron

Model Name	900S 900SESD	907 907ESD	908 908ESD
Type	Small	Medium	Large
Style	Regular ESD	Regular ESD	Regular ESD
Power Consumption	AC; 24V/50W		
Standard Tip	900S-T-I	900M-T-1.6D	900L-T-3.2D
Tip to Ground Resistance	Under 2 ohms		
Tip to Ground Potential	Under 2 mV (Typ. 0.6 mV)		
Heating Element	Ceramic heater		
Total Length (w/o cord)	176 mm (7 in.)	190 mm (7.5 in.)	200 mm(7.9 in)
Weight (w/o cord)	25 g (0.06 lbs)	44 g (0.09lbs)	54 g (0.12 lbs)

Part Number		Price per ea.
92-1215-00	Hakko 936 ESD Soldering Station	145.35
92-1251-00	Hakko 936 Non-ESD Soldering Station	126.48

HAKKO SOLDERING IRONS

- Both the Hakko 455 and 456 incorporate a ceramic heating element, which provides a longer service life than the conventional nichrome-iron element.
- Alloy-coated iron tips ensure long-lasting protection from corrosion
- The Hakko 455 is perfect for soldering tuners, inverters, and similar small components
- The Hakko 456 is ideal for soldering chassis, dynamos, large harnesses, transformers and other large components and assemblies

Part Number	455-16	456-16
Power Consumption	40W	60W
Standard Tip	A1052	A1026
Heating Element	Ceramic Heater	
Max. Temperature	599°C (1110°F)	599°C (1110°F)
Total Length	215mm (8.5 in.)	250mm (9.8 in.)
Weight	100 g (0.2 lb.)	150 g (0.31 lb.)

Part Number		Price per ea.
92-1258-00	Hakko 455-16 Soldering Iron	64.68
92-1259-00	Hakko 456-16 Soldering Iron	76.28

HAKKO

HAKKO FP-101 SOLDERING STATION

The Next Generation in Low Cost and High Performance

Building on the power and success of the Hakko FM-202, the Hakko FP-101 delivers the same superior heat transfer and thermal recovery using revolutionary quick change composite tips.

Selectable temperature ranges allow you to change the operating temperature range of the tip at the "touch of a button" without changing components of the station. The lock out keycard provides process control allowing you to lock in the operating temperature range. The Hakko FP-101 also features an automatic shutoff for safety which will turn off the power to the tip if the station is left idling for 30 minutes.

- The Hakko FP-101 case design allows additional stations to be stacked, conserving your valuable workspace.
- Superior Thermal Recovery
- Automatic Power Shut-off
- Lock Out Control of set temperature range
- Connector LED indicating iron is on
- Modular Design
- Ergonomic grip
- ESD safe by design.

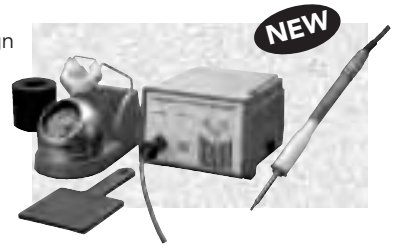

HAKKO

Power Consumption	75W
Temperature Ranges	6.5~343°C(~650°F)
	7.0~371°C(~700°F)7.5
	~399°C (~750°F) 8.0 ~427°C (~800°F)
Temperature Stability	±5°C (±9°F) at idle temperature

Station

Output Voltage	24V
Outer Dimensions	120(L) x 93(W) x 140(H) mm 4.7(L) x 3.7(W) x 5.5(H) in.
Weight	1.4 kg (3.1 lbs.)

Soldering Iron

Power Consumption	70W (24V)
Tip to Ground Resistance	Under 2 ohms
Tip to Ground Potential	Under 2mV
Total Length (w/o cord)	188 mm (7.4 in.) with T7-D24 tip
Weight (w/o cord)	30 g (0.067 lb./1.07 oz.) with T7-D24 tip
Cord	1.2m (4 ft.)

Part Number		Price per ea.
92-1219-00	Hakko FP-101 Soldering Station	255.00

KESTER FLUX-PEN

- The Kester Flux-Pen® is a unique tool for rework and touch-up soldering
- It allows controlled application of flux, eliminating the mess from flux bottles
- Flux-Pen® are ideally suited for surface mount rework, component add-on applications, and TAB assembly operations.
- The two available formulas are:

Formula	Flux Type
"RMA"	No-Clean 951
Low Solids	No-Clean

Part Number		Price per ea.
29-0111-00	Formula 186 Flux-Pen	5.90
29-0140-00	Formula 951 Flux-Pen	5.90

© HAPP CONTROLS

HAKKO TIPS FOR 900M/907/913 SERIES

- High quality, long life tips
- Designed and manufactured for maximum heat conductivity and performance

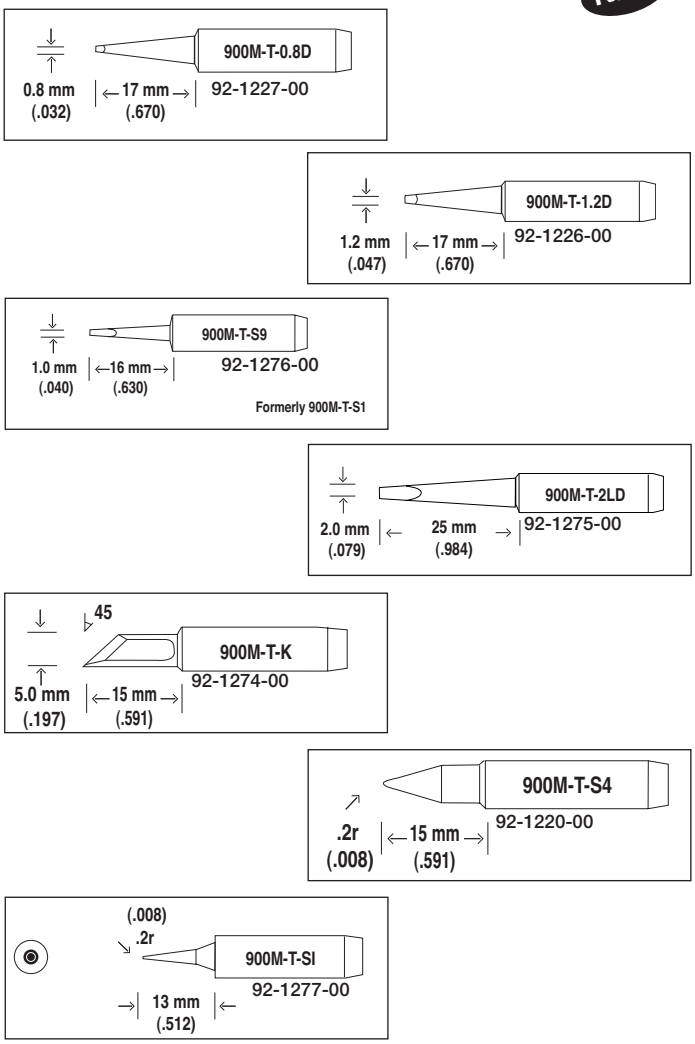

Part Number		Price per ea.
92-1227-00	900M-T-0.8D	6.20
92-1226-00	900M-T-1.2D	5.20
92-1276-00	900M-T-S9	5.97
92-1275-00	900M-T-2LD	5.77
92-1274-00	900M-T-K	8.67
92-1220-00	900M-T-S4	6.20
92-1277-00	900M-T-SI	6.27

DO YOU WANT TO KNOW EACH TIME YOUR ORDER SHIPS OUT?

e-mail notification and order **tracking information** is now available from Happ Controls! Contact your sales representative or e-mail our customer service department at: **info@happcontrols.com** with your account information.

HAKKO 191B THERMOMETER

- Fast, accurate, tip temperature measurements using a fine CA wire sensor (dia. 0.2mm)
- Large, easy-to-read digital temperature display.
- The sensor with special metal alloy coating (pat. pending) resists corrosion and oxidation.
- Quick and easy sensor replacement.

Type	Fahrenheit
Resolution	1°F
Range of Measurement	0°F - 1200°F
Applied Sensor	K(CA) Thermocouple
Precision	±6°F (572°F - 932°F)
Display	a) 3.5 - digital liquid crystal display b) Battery alarm c) Burn out
Power Supply	006P, 9V dry battery
Battery Life	More than 150 hours
Outer Dimensions	160(W) x 45(H) x 80(D) mm (6.3(W) x 1.8(H) x 3.1(D) in.)
Weight	Maximum 1 kg (2.2 lbs.)
Environmental Temperature Range	0°F - 104°F

Part Number		Price per ea.
92-1256-00	Hakko 191B Thermometer	225.07

HAKKO 850D HOT AIR REWORK SYSTEM

The Hakko 850D comes with a control card which makes SMD Rework process control easy. Use the card to enter temperature settings into the system memory. When the card is removed, all parameter settings and the temperature setting are "locked" in the system memory. This not only provides strict process control, but also guards against operators making inadvertent changes.

- Digital temperature display.
- Airflow adjustment
- Self-contained air source.
- ESD safe by design.
- Auto cool-down mode for safety
- Over 40 nozzle styles available
- Power Consumption 410W/120V AC

Station	
Power Consumption	30W
Pump	Diaphragm pump
Capacity	23 l/min. (MAX.)
Outer Dimensions	160(W) x 148(H) x 263(D) mm (6.3(W) x 5.83(H) x 10.35(D) in.)
Weight	Approx. 4.7 kg (10.35 lbs.)
Iron	
Power Consumption	380W
Method of Temperature Control	Sensor feed back
Hot Air Temperature	100°C - 420°C (212°F - 788°F) measured at sensor
Switch for Start/Stop	Built into the handle
Length (w/o cord & hose)	200 mm (7.87 in.)
Weight (w/o cord & hose)	200 g (0.44 lb.)

Part Number		Price per ea.
92-1216-00	Hakko 850D Hot Air Rework System	917.05

HAKKO FM-202 SOLDERING STATION

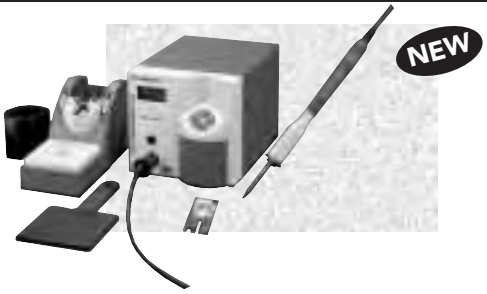

A New Revolutionary Soldering Station
The Hakko FM-202 is the first in a series of modular soldering, desoldering, and rework stations to be introduced by American Hakko. The FM-202 features revolutionary quick change composite tips that provide superior heat transfer and thermal recovery at any temperature. Adjustable temperature eliminates the need to purchase additional tips just to change temperature, reducing the total cost of ownership. The unit also features an industry first process gate that identifies the tip being used and configures the station accordingly to ensure tip temperature accuracy. Additional features also include auto shutoff, and low temperature alarm, all in a modular ESD safe design

- Process Gate identifies tip in use and ensures accuracy of tip temperature
- Accurate tip temperature between 400°F and 840°F.
- Superior Thermal Recovery
- Automatic Power Shut-off
- Low Temperature Alarm
- Lock Out Control of set temperature
- Connector LED indicating iron is on
- Modular Design
- Ergonomic grip
- ESD safe by design.

Part Number		Price per ea.
94-0348-00	Hakko FM-202 Soldering Station	509.00

Power Consumption	75W (Max. 130W)
Temperature Range	200°C - 450°C (400°F - 840°F)
Temperature Accuracy	±10°C (±18°F) of set temperature (Fig.1)
Temperature Stability	±5°C (±9°F) at idle temperature

Station

Output Voltage	24V
Outer Dimensions	178(L) x 119(W) x 117(H) mm 7.0(L) x 4.7(W) x 4.2(H) in.
Weight	2.7 kg (5.9 lbs.)

Soldering Iron

Power Consumption	70W (24V)
Tip to Ground Resistance	Under 2 ohms
Tip to Ground Potential	Under 2mV
Total Length (w/o cord)	188 mm (7.4 in.) with T7-D24 tip
Weight (w/o cord)	30 g (0.067 lb./1.07 oz.) with T7-D24 tip
Cord	1.2m (4 ft.)

HAKKO TIPS FOR FM-202 SOLDERING STATION

NEW

- High quality, long life tips
- Designed and manufactured for maximum heat conductivity and performance

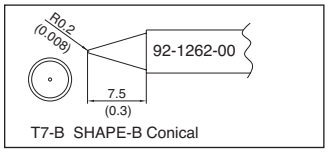

T7-B SHAPE-B Conical

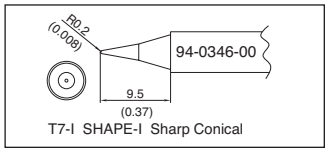

T7-I SHAPE-I Sharp Conical

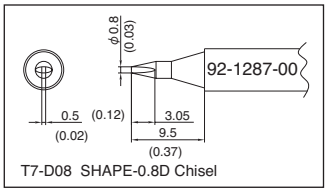

T7-D08 SHAPE-0.8D Chisel

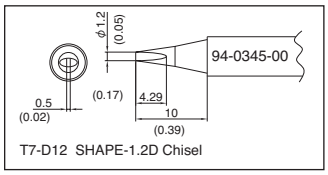

T7-D12 SHAPE-1.2D Chisel

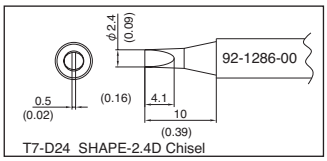

T7-D24 SHAPE-2.4D Chisel

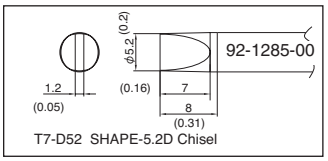

T7-D52 SHAPE-5.2D Chisel

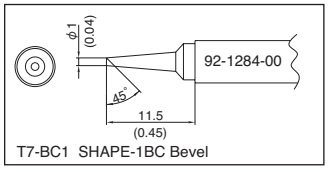

T7-BC1 SHAPE-1BC Bevel

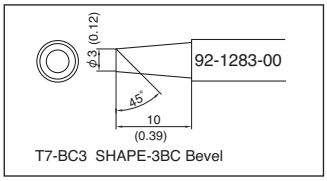

T7-BC3 SHAPE-3BC Bevel

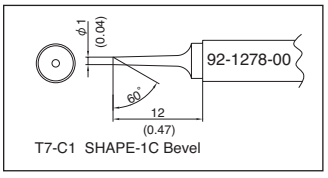

T7-C1 SHAPE-1C Bevel

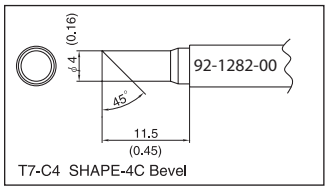

T7-C4 SHAPE-4C Bevel

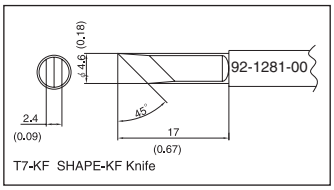

T7-KF SHAPE-KF Knife

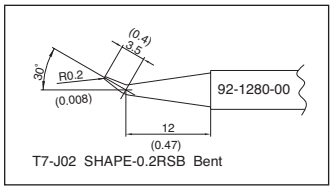

T7-J02 SHAPE-0.2RSB Bent

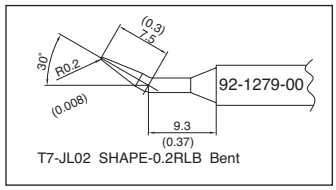

T7-JL02 SHAPE-0.2RLB Bent

Part Number	Hakko No.	Price per ea.
92-1262-00	T7-B	9.97
94-0346-00	T7-I	18.65
92-1287-00	T7-D08	9.97
94-0345-00	T7-D12	10.20
92-1286-00	T7-D24	9.97
92-1285-00	T7-D52	9.97

Part Number	Hakko No.	Price per ea.
92-1284-00	T7-BC1	9.97
92-1283-00	T7-BC3	9.97
92-1278-00	T7-C1	15.97
92-1282-00	T7-C4	9.97
92-1281-00	T7-KF	15.97
92-1280-00	T7-J02	15.97
92-1279-00	T7-JL02	15.97

© HAPP CONTROLS

HAKKO 472D DESOLDERING TOOL

Desoldering process control made easy with the Hakko control card. The Hakko 472D comes with a control card. Use the card to enter temperature settings into the system memory. When the card is removed, all parameter settings and the temperature setting are"locked" in the system memory. This not only provides strict process control but also guards against operators making inadvertent changes.

- The Hakko 472D provides a pencil-type desoldering tool with powerful suction power.
- The short straight heating element aids in ease of operation
- The output circuit is isolated from the power input and insulated transformer.
- ESD Safe by design.
- Zero crossover switching on motor

Part No.	472D-01
Output Voltage	24V AC
Power Consumption	110W
Vacuum Generator	Vacuum pump, double cylinder type
Vacuum Pressure	80 kPa (600 mmHg) (24 in. Hg)
Suction Flow	15 l/min.
Motor Output	18W
Outer Dimensions	160 x 148 x 263 mm (6.3 x 5.83 x 10.35 in.)
Weight	Approx. 4.6 kg (10.13 lbs.)

Desoldering Handpiece

Model Name	807
Part No.	C1091
Heating Element	Ceramic Heater
Power Consumption	24V AC/60W
Nozzle-to-Ground Resistance	Under 2 ohms
Nozzle-to-Ground Potential	Under 2 mV
Temperature	350°C - 450°C (662°F - 842°F)
Standard Nozzle	A1003 (Nozzle dia. 1.0mm)
Length	250 mm (8.07 in.)
Weight (w/o cord & hose)	

Part Number		Price per ea.
92-1218-00	Hakko 472D-01 Desoldering Tool	509.05

HAKKO 808 DESOLDERING TOOL

The Hakko 808 is a handy, portable desoldering tool with a built-in vacuum pump. No separate station is required.

Thin, comfortable grip and low vibrationThis unique Hakko design places the pump and motor above, not inside, the grip. Vibration is kept to a minimum, and the grip is thin and easy to hold. Delicate tasks are performed with greater ease; the tool can be used for long periods without operator fatigue.

Simple and inexpensive pump maintenance.
The new, miniature, high-performance diaphragm pump is housed in the chamber at the rear of the Hakko 808. Pump maintenance is quick and easy-simply remove the cover. If repairs are ever needed, replacement parts are inexpensive.

- Tip-to-ground potential difference no greater than 2mV.
- Tip-to-ground resistance no greater than 2 ohms.
- Adjustable temperature control (380°C - 480°C / 715°F - 895°F).
- Includes Carrying Case and Hot Sock
  (PN: Carrying Case - C1099 and Hot Sock - 605M)

Specifications

Part No.	808-KIT/P
Power Consumption	100W
Heating Element	Ceramic heater
Motor Output	6.5W
Temperature	380°C - 480°C (715°F - 895°F)
Tip to Ground Resistance	Under 2 ohms
Tip to Ground Potential	Under 2mV
Vacuum Pump	Double-cylinder diaphragm pump
Vacuum Pressure	600 mmHg (24 in. Hg)
Suction Flow	10 l/min.
Dimensions (w/o Case) (6.7(H) x 9.3(W) in.)	170(H) x 235(W) mm
Weight (w/o Case)	420 g (0.9 lb.)
Standard Nozzle	A1005 (Nozzle dia. 1.0mm)

Part Number		Price per ea.
92-1253-00	Hakko 808 Desoldering Tool	199.98

HAKKO 853 PRE-HEATER

- Compact design
- Fast Heating
- Excellent thermal stability
- Temperature control with closed loop sensor
- ESD safe by design
- Model Name 853-2
- Power Consumption 500W/120VAC
- Hot Air Temperature 120°C - 250°C (248°F - 482°F)
- Air Flow 0.18 cu.m/min (6.35 cu.ft/min)
- Outer Dimensions 140(w) x 50(h) x 170(d) mm 5.5(w) x 2.0(h) x 6.7(d) in
- Weight (w/o cord) 1kg (2.2 lbs)

Part Number		Price per ea.
92-1255-00	Hakko 853 Pre-Heater	509.05

DO YOU WANT TO KNOW EACH TIME YOUR ORDER SHIPS OUT?

e-mail notification and order **tracking information** is now available from Happ Controls! Contact your sales representative or e-mail our customer service department at: **info@happcontrols.com** with your account information.

HAKKO 493 SMOKE ABSORBER

- Soldering work involves both metallic and organic compounds; the solders themselves, and the fluxes necessary for soldering.
  These compounds release noxious fumes when heated, which can lead to both short and long term operator irritations and illness.
- The Hakko 493 is designed to remove these noxious fumes quickly, safely, and efficiently.
- The replaceable filter is made by joining a specific urethane foam with refined, activated high absorption carbon.
- The fan is fully adjustable, quiet, and efficient.

ESD safe by design. The entire unit is processed with a non-sloughing static dissipative conductive material.

Absorption Capacity (w/o filter)	Approx. 1.07m?/min. (37.79 ft?/min.)
Outer Dimensions	220(W) x 270(H) x 168(D) mm 8.7(W) x 10.6(H) x 6.6(D) in.)
Weight	1.5 kg (3.3 lbs.)
Accessories	Filter (3 pcs.)
Activated-Carbon Filter	
Size	130 x 130 x 10 mm (5.1 x 5.1 x 0.4 in.)
Amount of Activated-Carbon filter	12 g (0.03 lb.)

Max. Absorbing weight of noxious components per filter 4 g (0.01 lb.)

Part Number		Price per ea.
92-1260-00	Hakko 493 Smoke Absorber	105.07

HAPP CONTROLS SELLS BRAND NAME QUALITY

© HAPP CONTROLS

PACE TW 100 TEMPWISE™ DIGITAL SOLDERING STATION

- TempWise™ TW 100 with InstaCal™ offers you the option of unsurpassed temperature accuracy, specification conformance and verification
- Now you can enjoy the comfort, convenience and performance of a Tip Cartridge System with the legendary accuracy and repeatability that you expect from PACE
- Simply insert the desired tip geometry into the handle, select your temperature and touch the tip to the InstaCal™ Sensor which plugs right into the power source
- In just seconds, the system is calibrated to operate within +/- 15°C (27°F)
- Even if you change temperatures, the system and tip stay in calibration
- When changing tips, the system will prompt the user to calibrate so you can always be sure your operating temperature meets your process specification, unlike other systems
- Ref. No. 8007-0389

Features

Calibration Requirement:	Self-Calibrating with InstaCal Module
Thermal Management System:	Microprocessor control with digital user interface
C/F Display Option	Yes
Temperature Lockout:	Yes, using password.
Temperature Setback:	Yes, user selected up to 90 minutes
Auto Off:	Yes, user selected up to 90 minutes
User Defined Operating Temperature Range:	Yes
Heat Level / Temperature Selection:	LED Display and Keyboard
Operating Heat Level / Temperature Visible:	Yes, LED Display
Handpiece:	TC 100
ESD Safe Housing:	Yes
Can be mounted under a shelf or workbench	Yes, with optional mounting bracket

Specifications

Power Requirements:	97-127 VAC, 50/60 Hz, 80 Watts maximum 197-253 VAC, 50/60 Hz, 80 Watts maximum
Dimensions:	184mm H x 107mm W x 122mm D (7.25" H x 4.2" W x 4.8" D)
Tip & Toll Stand Dimensions:	71mm H x 88mm W x 195mm D (2.8" H x 3.5" W x 7.7" D)
Weight:	1.6Kgs (3.5lbs)
TC 100 Hand Piece Weight:	88.2g (3.1oz)
Tip to ground resistance:	2 ohms or less
Temperature stability:	± 5°C (± 9°F) at idle tip temp.
Absolute Temperature Accuracy:	Within ± 15°C (27°F)
Tip Temperature Range:	260°C - 425°C (500°F - 800°)

Part Number		Price per ea.
92-1446-00	Pace TW 100 TempWise™ Digital Soldering Station	350.00

PACE HW 100 HEATWISE™ SOLDERING STATION

- HeatWise™ senses the thermal demand of the work and responds immediately by delivering the exact amount of power required to reflow the joint, at safer, lower temperatures
- HeatWise™ responds with high power so you won't run out of heat before the job is complete
- Calibration not required
- No dials, buttons or read-outs
- Making high quality solder joints is easier than ever before, even for your less experienced operators!
- Working with lead free solder? Not a problem for HeatWise™ technology!
- Making high quality lead free solder joints is just as easy, even with these more challenging alloys
- Ref. No. 8007-0387

Features

Calibration Requirement:	None
Thermal Management System:	Microprocessor control with fixed performance level selected by Power Module
C/F Display Option	Not Applicable
Temperature Lockout:	Yes, using Power Modules. Operators access of Power Modules can be easily restricted.
Temperature Setback:	Yes, fixed to 30 minutes (can be disabled)
Auto Off:	Yes, fixed to 30 minutes (can be disabled)
User Defined Operating Temperature Range:	No
Heat Level / Temperature Selection:	Power Module
Operating Heat Level / Temperature Visible:	Yes, color coded Power Modules (5, 6 and 7 Power Modules supplied as standard)
Hand Piece:	TC 100
ESD Safe Housing:	Yes
Can be mounted under a shelf or workbench	Yes, with optional mounting bracket

Specifications

Power Requirements:	97-127 VAC, 50/60 Hz, 80 Watts maximum 197-253 VAC, 50/60 Hz, 80 Watts maximum
Dimensions:	184mm H x 107mm W x 122mm D (7.25" H x 4.2" W x 4.8" D)
Tip & Toll Stand Dimensions:	71mm H x 88mm W x 195mm D (2.8" H x 3.5" W x 7.7" D)
Weight:	1.6Kgs (3.5lbs)
TC 100 Handpiece Weight:	88.2g (3.1oz)
Tip to ground resistance:	2 ohms or less
Temperature stability:	± 5°C (± 9°F) at idle tip temp.
Absolute Temperature Accuracy	N/A
Tip Temperature Range:	260°C - 425°C (500°F - 800°F)

Part Number		Price per ea.
92-1445-00	PACE HW 100 Heatwise™ Soldering Station	199.00

© HAPP CONTROLS

PACE HEATWISE™ AND TEMPWISE™ TIPS

- Wide variety of long life tips
- Superior heat transfer capability

NEW

92-1447-00
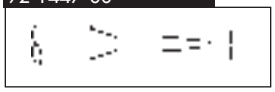

92-1448-00
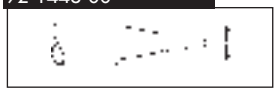

92-1449-00

92-1450-00

92-1451-00
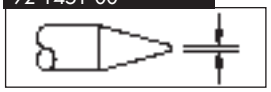

92-1452-00
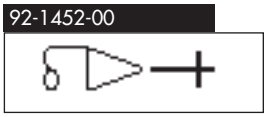

92-1453-00
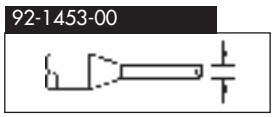

92-1454-00
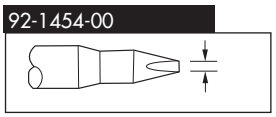

92-1455-00
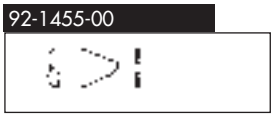

92-1456-00

92-1457-00
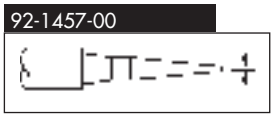

92-1458-00
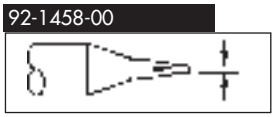

92-1459-00

92-1460-00
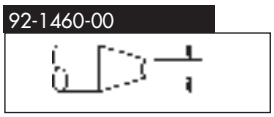

92-1461-00
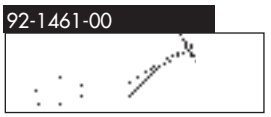

92-1462-00
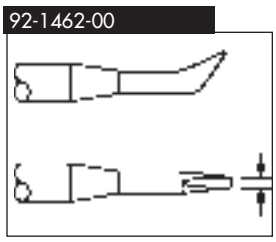

92-1463-00

92-1464-00
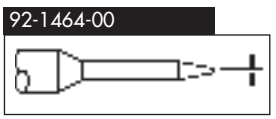

92-1465-00
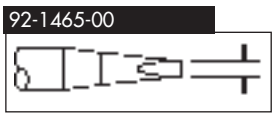

92-1466-00

92-1471-00
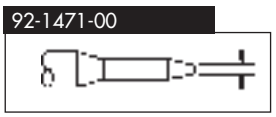

92-1467-00

92-1468-00
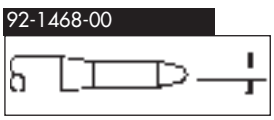

92-1469-00
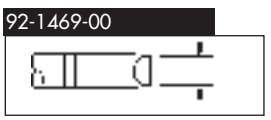

92-1470-00
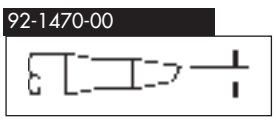

92-1476-00
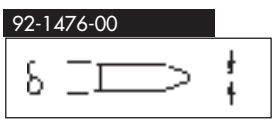

92-1472-00
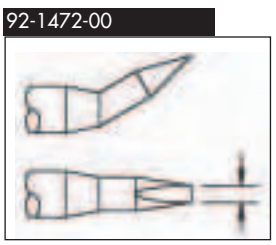

92-1473-00
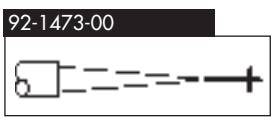

92-1474-00

92-1475-00
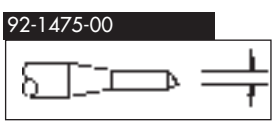

92-1480-00

92-1477-00

92-1478-00
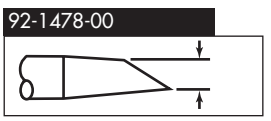

92-1479-00
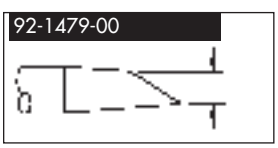

92-1481-00
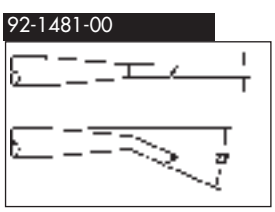

92-1482-00
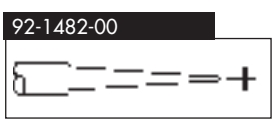

Part Number	Ref. No.	Description	SIZE - L	SIZE - D	Price per ea.
92-1447-00	1124-0001-P1	1/32" Conical Sharp Extended	13.4mm (0.530")	0.80mm (0.031")	10.00
92-1448-00	1124-0002-P1	1/64" Conical Sharp	8.3mm (0.330")	0.40mm (0.016")	10.00
92-1449-00	1124-0003-P1	1/64" Conical Sharp Bent 30 Degrees	7.8mm (0.310")	0.40mm (0.016")	10.00
92-1450-00	1124-0004-P1	1/64" Conical Sharp Extended	13.5mm (0.535")	0.40mm (0.016")	10.00
92-1451-00	1124-0005-P1	1/32" Conical	4.7mm (0.188")	0.80mm (0.031")	10.00
92-1452-00	1124-0006-P1	3/128" Conical	4.6mm (0.184")	0.60mm (0.023")	10.00
92-1453-00	1124-0007-P1	1/16" 90 Degree Chisel	10.9mm (0.430")	1.60mm (0.063")	10.00
92-1454-00	1124-0008-P1	3/64" 30 Degree Chisel	9.9mm (0.390")	1.20mm (0.047")	10.00
92-1455-00	1124-0009-P1	3/64" 30 Degree Bevel	4.3mm (0.170")	1.20mm (0.047")	10.00
92-1456-00	1124-0010-P1	13/64" Chisel	7.62mm (0.300")	5.15mm (0.203")	10.00
92-1457-00	1124-0011-P1	1/64" 60 Degree Bevel	14.7mm (0.580")	0.40mm (0.016")	10.00
92-1458-00	1124-0012-P1	1/32" 30 Degree Chisel	9.1mm (0.360")	0.80mm (0.031")	10.00
92-1459-00	1124-0013-P1	3/32" 30 Degree Chisel	9.9mm (0.390")	2.40mm (0.094")	10.00
92-1460-00	1124-0014-P1	5/64" 60 Degree Chisel	4.7mm (0.185")	2.00mm (0.078")	10.00
92-1461-00	1124-0015-P1	1/64" Conical, Sharp, Bent 30 Degrees Extended	15.8mm (0.625")	0.40mm (0.016")	10.00
92-1462-00	1124-0016-P1	3/64" Chisel Bent 30 Degrees	10.7mm (0.425")	1.20mm (0.047")	10.00
92-1463-00	1124-0017-P1	1/16" 60 Degree Chisel	15.8mm (0.425")	1.60mm (0.063")	10.00
92-1464-00	1124-0018-P1	1/32" Conical Sharp Extended	16.7mm (0.660")	0.80mm (0.031")	10.00
92-1465-00	1124-0019-P1	1/16" 30 Degree Chisel	9.9mm (0.390")	1.60mm (0.063")	10.00
92-1466-00	1124-0020-P1	1/8" 90 Degree Chisel	4.8mm (0.190")	3.20mm (0.125")	10.00
92-1467-00	1124-0021-P1	3/128" Conical Sharp Bent 30 Degrees	14.4mm (0.570")	0.60mm (0.023")	10.00
92-1468-00	1124-0022-P1	1/16" Conical Sharp	9.9mm (0.390")	1.60mm (0.063")	10.00
92-1469-00	1124-0023-P1	1/8" 90 Degree Chisel Extended	8.6mm (0.340")	3.20mm (0.125")	10.00
92-1470-00	1124-0024-P1	1/16" 30 Degree Bevel	9.9mm (0.390")	1.60mm (0.063")	10.00
92-1471-00	1124-0025-P1	1/16" Conical Sharp Extended	12.1mm (0.478")	1.60mm (0.063")	10.00

PACE HEATWISE™ AND TEMPWISE™ TIPS (continued)

Part Number	Ref. No.	Description	SIZE - L	SIZE - D	Price per ea.
92-1472-00	1124-0026-P1	1/16" Chisel Bent 30 Degrees	9.7mm (0.385")	1.60mm (0.063")	10.00
92-1473-00	1124-0027-P1	3/128" Conical Sharp	15.2mm (0.600")	0.60mm (0.023")	10.00
92-1474-00	1124-0028-P1	3/64" Chisel, Bent 30 Degrees, Extended	21.8mm (0.860")	1.20mm (0.047")	10.00
92-1475-00	1124-0029-P1	1/32" 30 Degree Bevel	9.1mm (0.360")	0.80mm (0.031")	10.00
92-1476-00	1124-0030-P1	1/32" Conical Sharp	9.9mm (0.390")	0.80mm (0.031")	10.00
92-1477-00	1124-0031-P1	Heat Staking	N/A	4.00mm (0.156")	10.00
92-1478-00	1124-0032-P1	MiniWave	N/A	6.35mm (0.25")	10.00
92-1479-00	1124-0033-P1	Angled MiniWave, 3.3 mm	N/A	6.35mm (0.25")	10.00
92-1480-00	1124-0034-P1	Single Sided Chisel	N/A	6.35mm (0.25")	10.00
92-1481-00	1124-0035-P1	Angled MiniWave, 2.4mm	N/A	3.04mm (0.12)	10.00
92-1482-00	1124-0036-P1	1/128" Conical	N/A	0.19mm (0.007)	10.00
92-1483-00	1124-0037-P1	1/4 Flat Blade	N/A	6.35mm (0.25")	10.00

PACE MBT 201A SOLDERING / DESOLDERING SYSTEM

- Analog High Performance SensaTemp Soldering/Desoldering Station
- Self-contained, high capacity, low temperature SMT/Thru-Hole soldering with dual channel capability
- Full SMT upgradeability by adding our other SensaTemp hand pieces (TJ-70 ThermoJet, TP-65 ThermoPik or DTP-80 Dual ThermoPik).
- AUTO Snap-VAC improves thru-hole desoldering performance, increases tip life—a PACE EXCLUSIVE feature
- QUIET FLO" pump for vacuum and pressure
- Dual channel capability
- Controllable Air Pressure Port

Specifications

Unit:	MBT 201-SD MBT 201E-SD
Power Requirements:	115VAC, 60Hz, 230VAC, 50/60Hz, 184 Watts maximum 207 Watts maximum
Dimensions:	135mm H x 165mm W x 203mm D (5.3" H x 6.5" W x 8.0" D)
Weight:	Approx. 4 Kg (8 lbs.) Approx. 4 Kg (8 lbs.)
Handpiece Specs	
Tip to ground resistance:	2 ohms or less
Temperature stability:	± 1.1°C (± 2°F) at idle from set tip temp.
Tip Temperature Range:	232° to 482°C (450° to 900°F) nominal
Vacuum and Air	
Vacuum Rise Time:	200ms average as measured by PACE Process Monitor
Vacuum:	51 cm Hg. (20 in. Hg.) nominal
Pressure:	.48 Bar (7 p.s.i.) nominal at maximum setting
Air Flow:	9 SLPM (0.32 SCFM) maximum

Part Number		Price per ea.
92-1441-00	PACEMBT 201A Soldering/Desoldering System	800.00

PACE MBT 250-SDPT SOLDERING/DESOLDERING STATION

- Self-contained, three channel capability offers high capacity, low temperature SMT/Thru-Hole soldering and desoldering
- Digital readout displays the current channel's temperature information, error codes and programming status
- AUTO Snap-VAC improves thru-hole desoldering performance, and increases tip life—a PACE EXCLUSIVE feature
- "QUIET FLO" pump for vacuum and pressure
- Operates any three SensaTemp hand pieces simultaneously
- Automatic or manual tip temperature setback and power down, constant memory
- Automatic tip offset compensation system

Specifications

Power Requirements:	115VAC, 60Hz, 230VAC, 50/60Hz, 184 Watts maximum 207 Watts maximum
Dimensions:	135mm H x 165mm W x 260mm D 135mm H x 165mm W x 260mm D (5.3" H x 6.5" W x 9.25" D) (5.3" H x 6.5" W x 9.25" D)
Weight:	Approx. 5 Kg (10 lbs.) Approx. 5 Kg (10 lbs.)
Hand Piece Specs	
Tip to ground resistance:	2 ohms or less
Temperature stability:	± 1.1°C (± 2°F) at idle from set tip temp.
Tip Temperature Range:	38° to 482°C (100° to 900°F) nominal
Vacuum and Air	
Vacuum Rise Time:	200ms average as measured by PACE Process Monitor
Vacuum:	51 cm Hg. (20 in. Hg.) nominal
Pressure:	.48 Bar (7 p.s.i.) nominal at maximum setting
Air Flow:	9 SLPM (0.32 SCFM) maximum

Part Number		Price per ea.
92-1440-00	Pace Mbt 250-Sdpt Soldering/Desoldering Station	1,600.00

© HAPP CONTROLS

PACE MBT 250-SD SOLDERING/DESOLDERING SYSTEM

- High Performance SensaTemp Soldering/Desoldering Station
- Self-contained, three channel capability offers high capacity, low temperature SMT/Thru-Hole soldering and desoldering
- Digital readout displays the current channel's temperature information, error codes and programming status.
- AUTO Snap-VAC improves thru-hole desoldering performance; increases tip life—a PACE EXCLUSIVE feature
- "QUIET FLO" pump for vacuum and pressure
- Operates any three SensaTemp handpieces simultaneously
- Automatic or manual tip temperature setback and power down, constant memory
- Automatic tip offset compensation system

Specifications	
Power Requirements:	115VAC, 60Hz, 230VAC, 50/60Hz, 184 Watts maximum 207 Watts maximum
Dimensions:	135mm H x 165mm W x 260mm D 135mm H x 165mm W x 260mm D (5.3" H x 6.5" W x 9.25" D) (5.3" H x 6.5" W x 9.25" D)
Weight:	Approx. 5 Kg (10 lbs.) Approx. 5 Kg (10 lbs.)
Hand Piece Specs	
Tip to ground resistance:	2 ohms or less
Temperature stability:	± 1.1°C (± 2°F) at idle from set tip temp.
Tip Temperature Range:	38° to 482°C (100° to 900°F) nominal
Vacuum and Air	
Vacuum Rise Time:	200ms average as measured by PACE Process Monitor
Vacuum:	51 cm Hg. (20 in. Hg.) nominal
Pressure:	.48 Bar (7 p.s.i.) nominal at maximum setting
Air Flow:	9 SLPM (0.32 SCFM) maximum

Part Number		Price per ea.
92-1439-00	Pace MBT 250-SD Soldering/Desoldering System	1,100.00

PACE ST25 ANALOG SOLDERING STATION

- Analog SensaTemp Soldering Station
- High capacity SMT/Thru-hole soldering
- Adjustable °F/ °C temperature control dial
- Temperature/dial lock
- Modular stacking capabilities
- Ref. No 8007-0371

Specifications	
Unit:	ST 25
Power Requirements:	97-127 VAC, 50/60 Hz, 90 197-253 VAC, 50/60 Hz, 80 Watts maximum at 115 VAC, 60Hz Watts maximum at 230 VAC, 50Hz
Dimensions:	88mm H x 114mm W x 165mm D 88mm H x 114mm W x 165mm D (3.5" H x 4.5" W x 6.5" D) (3.5" H x 4.5" W x 6.5" D)
Weight:	Approx. 2.3 Kg (5 lbs.) Approx. 2.3 Kg (5 lbs.)
Hand Piece Specs	
Tip to ground resistance:	2 ohms or less
Temperature stability:	± 1.1°C (± 2°F) at idle from set tip temp.
Tip Temperature Range:	204° to 454°C (400° to 850°F) nominal

Part Number		Price per ea.
92-1444-00	PACE ST25 Analog Soldering Station	99.00

PACE ST45 DIGITAL SOLDERING STATION

- Digital system
- High capacity SMT/Thru-hole soldering
- Digital LED temperature readout
- Password lock
- Temperature setback and Auto-Off safety system
- Color-coded temperature control keys
- User-friendly electronics
- Modular stacking capabilities
- Ref. No. 8007-0379

Specifications

Unit:	ST 45
Power Requirements:	97-127 VAC, 50/60 Hz, 197-253 VAC, 50/60 Hz, 90 Watts maximum at 115 VAC, 80 Watts maximum at 230 VAC, 60Hz 50Hz
Dimensions:	88mm H x 114mm W x 165mm D 88mm H x 114mm W x 165mm D (3.5" H x 4.5" W x 6.5" D) (3.5" H x 4.5" W x 6.5" D)
Weight:	Approx. 2.3 Kg (5 lbs.) Approx. 2.3 Kg (5 lbs.)

Hand Piece Specs

Tip to ground resistance:	2 ohms or less
Temperature stability:	± 1.1°C (± 2 °F) at idle from set tip temp

Part Number		Price per ea.
92-1443-00	PACE ST45 Digital Soldering Station	149.00

PACE ST75-SX ANALOG DESOLDERING SYSTEM

- Analog SensaTemp Desoldering Station, self contained
- Can be combined with a variety of other Thru-Hole or SMD desoldering handpieces
- Low profile aluminum extruded case
- Quiet vacuum pump
- Adjustable °F/ °C temperature control dial
- Exclusive Auto Snap-Vac
- Modular stacking capabilities
- Available as "Station Only"
- Portability Kit optional

Specifications

Unit:	ST 75 SX
Power Requirements:	97-127 VAC, 50/60 Hz, 197-253 VAC, 50/60 Hz, 90 Watts maximum at 115 VAC, 80 Watts maximum at 230 VAC, 60Hz 50Hz
Dimensions:	88mm H x 171mm W x 254mm D 88mm H x 171mm W x 254mm D (3.5" H x 6.75" W x 10" D) (3.5" H x 6.75" W x 10" D)
Weight:	Approx. 4 Kg (9 lbs.) Approx. 4 Kg (9 lbs.)

Hand Piece Specs

Tip to ground resistance:	2 ohms or less
Temperature stability:	± 1.1°C (± 2 °F) at idle from set tip temp.
Tip Temperature Range:	204° to 454°C (400° to 850°F) nominal
Vacuum and Air	
Vacuum Rise Time:	200ms average as measured by PACE Process Monitor
Vacuum:	51cm Hg. (20 in. Hg.) nominal
Pressure:	1.44 Bar (21 p.s.i.) nominal at maximum setting
Air Flow:	6 SLPM (0.22 SCFM) maximum

Part Number		Price per ea.
92-1571-00	PACE ST75-SX Analog Desoldering System	663.00

PACE PS-80/90 TIPS

NEW

92-1484-00

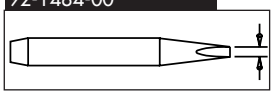

92-1485-00

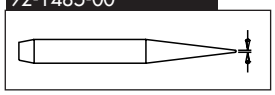

92-1486-00

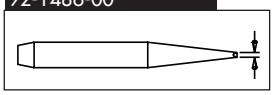

92-1487-00

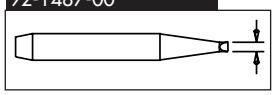

92-1488-00

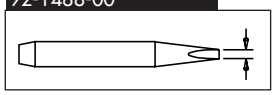

92-1489-00

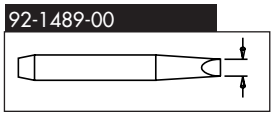

92-1490-00

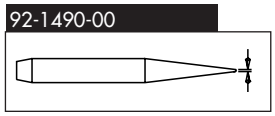

92-1491-00

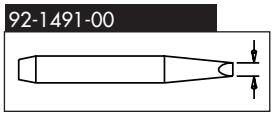

92-1492-00

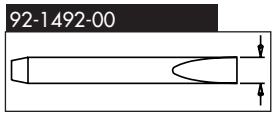

92-1493-00

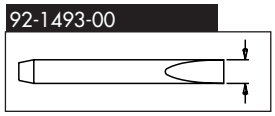

92-1494-00

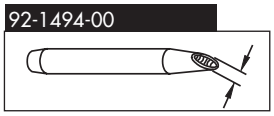

92-1495-00

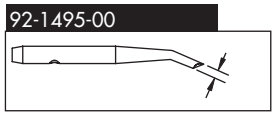

92-1496-00

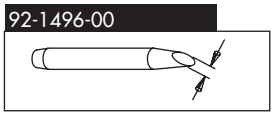

92-1497-00

92-1498-00

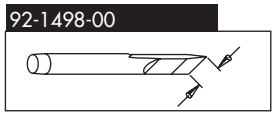

92-1499-00

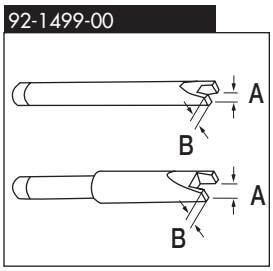

92-1500-00
92-1502-00
92-1504-00
92-1505-00

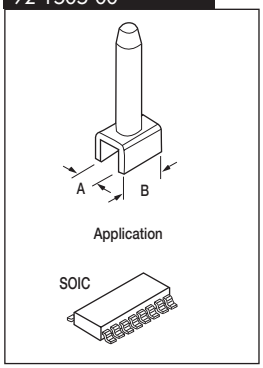

92-1501-00

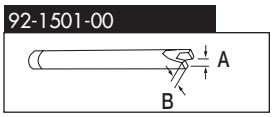

92-1503-00

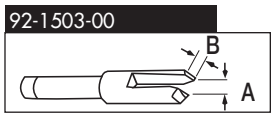

Part Number	Ref. No.	Description	Pkg Qty	Price per ea.
92-1484-00	1121-0414-P5	1/16" Chisel (High Conductivity)	5	25.00
92-1485-00	1121-0357-P5	1/64" Conical	5	25.00
92-1486-00	1121-0336-P5	1/32" Conical	5	25.00
92-1487-00	1121-0335-P5	1/16" Chisel	5	25.00
92-1488-00	1121-0499-P5	1/16" Chisel (Extended Reach)	5	25.00
92-1489-00	1121-0337-P5	1/8" Chisel	5	25.00
92-1490-00	1121-0359-P5	1/32" Chisel	5	25.00
92-1491-00	1121-0360-P5	3/32" Chisel	5	25.00
92-1492-00	1121-0363-P5	1/64" Bent Conical	5	25.00
92-1493-00	1121-0358-P5	3/16" Chisel	5	25.00
92-1494-00	1121-0490-P5	Mini-Wave	5	32.00
92-1495-00	1121-0610-P5	Angled Mini-Wave	5	31.00
92-1496-00	1121-0406-P5	Single Sided Chisel	5	25.00
92-1497-00	1121-0564-P5	Mini-Wave, Fine Pitch	5	32.00
92-1498-00	1121-0402-P1	Flat Blade, .25	1	15.00
92-1499-00	1121-0303-P1	Surface Mount Chip Removal,.14x0.8	1	14.75
92-1500-00	1121-0392-P1	SOIC-16 Removal	1	31.25
92-1501-00	1121-0302-P1	Surface Mount Chip Removal	1	14.75
92-1502-00	1121-0390-P1	SOIC-8 Removal	1	30.00
92-1503-00	1121-0304-P1	SOT-23	1	14.75
92-1504-00	1121-0391-P1	SOIC-14 Removal	1	31.25
92-1505-00	1121-0394-P1	SOICL-20 Removal	1	31.25

PACE DESOLDERING TIPS FOR SX-70 AND SX-80

NEW

- Sold in packages only

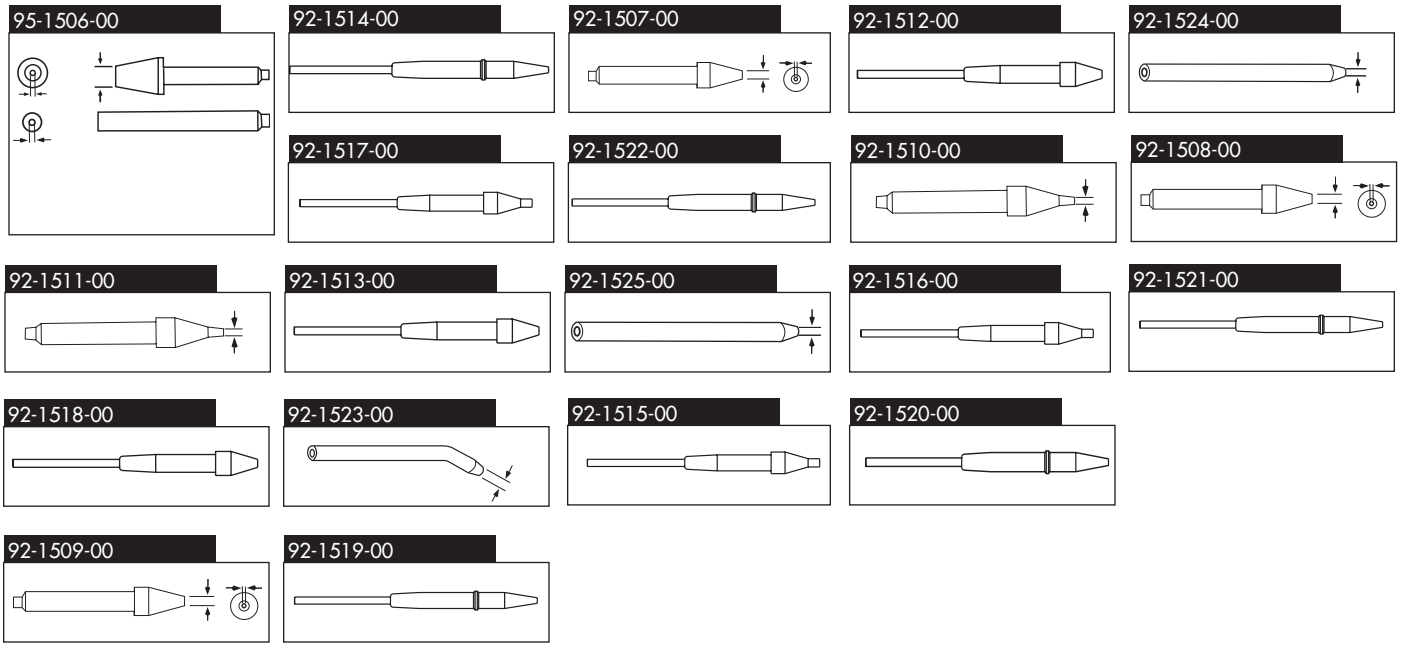

Part Number	Ref. No.	Size	Description	Pkg Qty	Price per ea.
92-1506-00	1121-0369-P5	3/16" O.D.	Flo-D-Sodr Tip	5	29.00
92-1514-00	1121-0680-P5	0.020" ID	Precision Endura Tip	5	19.00
92-1507-00	1121-0367-P5	0.030" ID	Thermo-Drive Desoldering Tip	5	29.00
92-1512-00	1121-0625-P5	0.030" ID	Thermo-Drive Endura Tip	5	39.75
92-1524-00	1121-0253-P5	0.030" ID	Micro Tip	5	8.75
92-1517-00	1121-0628-P5	0.030" ID	Thermo-Drive Endura Tip	5	39.75
92-1522-00	1121-0678-P5	0.030" ID	Precision Endura Tip	5	19.00
92-1526-00	1121-0214-P25	0.030" ID	Super Tip (Not Shown)	25	27.20
92-1510-00	1121-0505-P5	0.030"ID	Extended Reach Themro-Drive Tip	5	29.00
92-1508-00	1121-0342-P5	0.040" ID	Thermo-Drive Desoldering Tip	5	29.00
92-1511-00	1121-0494-P5	0.040" ID	Extended Reach Themro-Drive Tip	5	29.00
92-1513-00	1121-0624-P5	0.040" ID	Thermo-Drive Endura Tip	5	39.75
92-1525-00	1121-0254-P5	0.040" ID	Micro Tip	5	8.75
92-1516-00	1121-0629-P5	0.040" ID	Thermo-Drive Endura Tip	5	39.75
92-1521-00	1121-0679-P5	0.040" ID	Precision Endura Tip	5	19.00
92-1527-00	1121-0215-P25	0.040" ID	Super Tip (Not Shown)	25	27.20
92-1528-00	1121-0216-P25	0.050" ID	Super Tip (Not Shown)	25	27.20
92-1518-00	1121-0626-P5	0.060" ID	Thermo-Drive Endura Tip	5	39.75
92-1523-00	1121-0255-P5	0.060" ID	Micro Tip	5	8.75
92-1515-00	1121-0630-P5	0.060" ID	Thermo-Drive Endura Tip	5	39.75
92-1520-00	1121-0690-P5	0.060" ID	Precision Endura Tip	5	19.00
92-1509-00	1121-0368-P5	0.060"ID	Thermo-Drive Desoldering Tip	5	29.00
92-1519-00	1121-0695-P5	0.090" ID	Precision Endura Tip	5	19.00

Visit Our Web Site:
happcontrols.com
for **NEW** Product Updates!!

PACE SX-70 AND SX-80 SUPPLIES

NEW

Part Number	Ref. No.	Description	Price per pkg.
92-1529-00	1309-0018-P50	SX-70 Sodr-X-Tractor Filters, Pkg 50	14.00
92-1530-00	1309-0018-P10	SX-70 Sodr-X-Tractor Filters, Pkg 10	3.25
92-1531-00	1265-0009-P1	SX-70 Glass Chamber, Pkg 1	7.00
92-1532-00	1127-0006-P5	SX-70 Wire Brush 1/8", Pkg 5	17.00
92-1533-00	6010-0080-P1	SX-70 Heater And Seal Assembly, Pkg 1	95.00
92-1534-00	1127-0002-P5	SX-70 Bristle Brush, Pkg 5	15.00
92-1541-00	1127-0014-P5	SX-70 Wire Brush 3/16", Pkg 5	16.00
92-1535-00	6010-0106-P1	SX-80 Hand Piece, Pkg 1	250.00
92-1536-00	6019-0060-P1	SX-80 Tip And Tool Stand, Pkg 1	45.00
92-1537-00	1309-0054-P10	SX-80 Flux/Sodr Trap, Pkg 10	11.00
92-1538-00	1309-0054-P100	SX-80 Flux/Sodr Trap, Pkg 100	100.00
92-1539-00	6010-0107-P1	SX-80 Heater Assembly, Pkg 1	75.00
92-1540-00	1213-0087	SX-80 Front Seal, Pkg 1	5.00
92-1541-00	1500-0063	SX-80 Plunger Lock, Pkg 1	16.00
92-1543-00	1309-0028	Replaceable Visifilter, Pkg 1	11.00
92-1544-00	1309-0027-P10	Replaceable Visifilter, Elements, Pkg 10	9.00
92-1545-00	1309-0027-P25	Replaceable Visifilter, Elements, Pkg 25	19.00

PACE SENSA TEMP SUPPLIES

Part Number	Ref. No.	Description	Price per ea.
92-1559-00	6993-0238-P1	PS-90 Hand Piece, Tip and Tool Stand	75.00
92-1560-00	6010-0095-P1	PS-80/90 21V Heater Assembly	50.00
92-1561-00	4021-0008-P3	Sponge for PS-80/90 Tip and Tool Stand, Pkg 3	10.00
92-1562-00	1100-0206	Tip Tool	9.00
92-1563-00	6993-0138	Tip Maintenance Station with Fiber and Sponge Tool	85.00
92-1564-00	1100-0232	Fiber Cleaning Tool	16.00
92-1565-00	1100-0233	Sponge Cleaning Tool	16.00
92-1566-00	1348-0547-P10	Set Screws for All Sensa Temp Hand Pieces, Pkg 10	9.00

SENCORE PR570 POWERITE II

Identify And Troubleshoot Virtually Any AC Supply Problem!

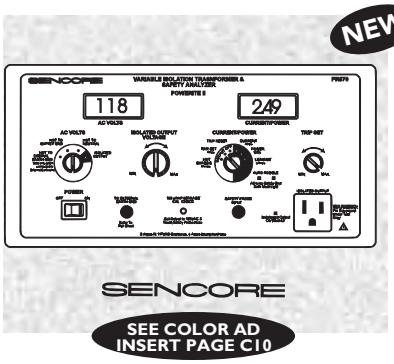

- Insure your safety and the safety of your test instruments whenever servicing electronic products
- Have complete confidence your AC line is right with the AC line monitor
- Watch voltage levels and current draw with simultaneous current and voltage displays
- Conquer AC power source problems plus startup, shutdown, and regulator failures with a digitally accurate and variable 0-140 volt AC supply
- An adjustable current trip feature minimizes expensive parts damage by automatically removing AC power when excessive current is being drawn
- An adjustable current trip feature minimizes expensive parts damage by automatically removing AC power when excessive current is being drawn
- Test AC outlets with an exclusive receptacle checker to ensure correct earth grounding for the highest level of safety
- Protect your customers from electrical shock and protect your business from lawsuit with an automatic, auto-toggling AC line and safety ground leakage test (leakage to 10 micro amps)

Isolated Output - VOLTAGE: 0-140 VAC typical at 117 VAC input, continuously variable. CURRENT: 3 amps continuous; 3-4 amps, 470 watts maximum intermittent use (5 minutes on, 5 minutes off). OUTPUT LOADING: Less than 12 volts drop in output with 3 amp load at 120 VAC.

AC Volts Functions - AC LINE VOLTAGE TESTS: Measures and displays the selected voltage: Hot to External Earth Ground, Hot to Safety Ground or Hot to Neutral. RANGE: 0-150 VAC. ACCURACY: ±3% reading ±2 counts, calibrated at 117 VAC. RESOLUTION: 1 volt. PROTECTION: 240 VAC. ISOLATED OUTPUT VOLTAGE: Measures and displays voltage at isolated output. Same as Line Voltage Tests.

Output Current Monitor - MEASUREMENT: True Power. RANGE: 0 to 470 watts. ACCURACY: ±5% of reading, ±2 counts. RESOLUTION: 1 watt.

Adjustable Current Trip - RANGE: 0-4 amps. ACCURACY: ±10% of reading, ±20 mA. RESOLUTION: Adjustable in 10 mA increments. TRIP TIME: 0.3 seconds max. with 200% overload.

Hot Chassis Test - MEASUREMENT: Ties high and low lead of primary together and measures leakage to exposed metal with power off. RANGE: 0 to 1999 µA. ACCURACY: ±3% of reading, ±2 counts. RESOLUTION: 1 µA. PROTECTION: 150 mA RMS, 150 V max.

Safety Leakage Test - MEASUREMENT: Referenced to either side of isolated output jack. (Automatically toggles high and low line and opens and closes safety ground and displays highest reading.) RANGE: 0 to 1999 µA. ACCURACY: ±3% of reading, ±2 counts. RESOLUTION: 1 µA. PROTECTION: 150 mA RMS, 150 V max. CAL CHECK: 100 µA, ±3% of reading, ±2 counts with isolated output at 120 VAC.

Protection - AC INPUT: 4 amps, type 3AG slo-blow fuse. ISOLATED OUTPUT: Adjustable current trip, 1 to 4 amps.

General - SIZE: 6" x 11.5" x 12" (15.2 x 25.4 x 29.2 cm) HWD. WEIGHT: 22 lbs. (10 kg). POWER: 105 to 125 VAC, 60 Hz, 4 amps idle current with no output load.

Part Number		Price per ea.
92-0312-00	Sencore PR570 PowerRite II	895.00

SEE COLOR AD INSERT PAGE C10

SENCORE CM2125 COMPUTER MONITOR ANALYZER

NEW

Completely Test And Troubleshoot High Resolution And Multi-Scan Computer Monitors From The Input Connector To The CRT!

- A complete, easy-to-use, high resolution computer monitor analyzer
- Special sync-locked signal substitutor for pinpointing monitor circuit problems
- Innovative performance pattern generator
- Patented "ringer" and HV multiplier tester that finds defective:
  - yokes
  - integrated high voltage transformers (IHVT)
  - switching transformers
- Integrated 2,000 volt DCV and PPV meter eliminates the need for a DVM for complete one-unit troubleshooting
- A fully programmable scan frequency and pixel resolution RGB video generator
  - bandwidth to 125 MHz and 2048 x 2048 pixels
  - compatible with TTL, analog, and ECL video types
  - 70 monitor setup memory locations (43 preprogrammed)
  - outputs protected to prevent damage from defective computer monitors
- "Hook-up" adapters available

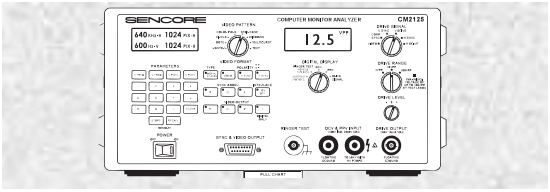

Part Number		Price per ea.
92-0303-00	Sencore CM2125 Computer Monitor Analyzer	3,795.00

SENCORE CM125 "PIX PAK" COMPUTER MONITOR SIGNAL GENERATOR

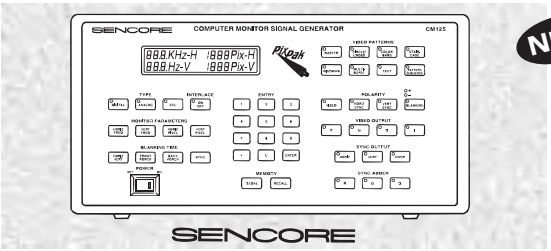

NEW

The easy to use, progammable, portable RGB generator that satisfies your computer testing needs.

- RGB video generator for bench and field computer monitor troubleshooting and testing
- A complete set of troubleshooting and performance testing video patterns to help you identify monitor defects
- Easy-to-use, portable, lightweight, and compact for all your field and bench testing needs
- A fully programmable scan frequency and pixel resolution RGB video generator:
  - Video bandwidth to 125 MHz and 2048 X 2048 pixel resolution
  - Compatible with TTL, analog, and ECL video types
  - 100 monitor setup memory locations (43 preprogrammed)
  - Output protected to prevent damage from defective computer monitors
- Hook-up adapters available for all popular monitor types

Part Number		Price per ea.
92-0304-00	Sencore CM125 Computer Monitor Analyzer	2,195.00

Visit Our Web Site:
happcontrols.com
for **NEW** Product Updates!!

SENCORE LC103 REZOLVER™ IN-CIRCUIT CAPACITOR AND INDUCTOR ANALYZER

Now Reliably Pinpoint Bad Capacitors And Inductors In-Circuit, Or Completely Analyze Them Out-Of-Circuit With Exclusive, Dynamic, Automatic Tests to EIA Standard

- Automatically tells you when further out-of-circuit tests are required.
- Tests SMT components "in-circuit" and accurately with exclusive, time-saving test accessories
- Makes all tests, compares the results to EIA standards, and tells you "GOOD" or "BAD" – automatically
- Analyzes capacitors for all four failures out-of-circuit:
  - Value from 1 pF to 20 F
  - Equivalent series resistance
  - Leakage with up to 1,000 volts applied
  - Dielectric absorption
- Analyzes inductors with exclusive patented tests for:
  - Values from 0.1 uH to 20 H
  - Opens or shorts
  - Even one shorted turn with patented
- Tests SCRs and triacs with optional SCR250 accessory

NEW

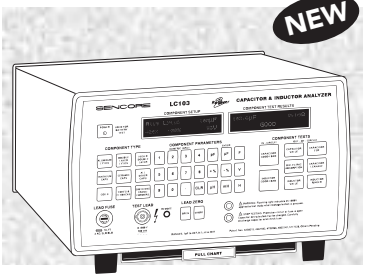

LC103 Condensed Specifications

IN-CIRCUIT TESTS (Capacitors and Inductors):

- Dynamic in-circuit tests to determine whether the component is good or bad.
- Component Types: Electrolytic, double layer lytic, tantalum, ceramic, and other capacitors.
- Yokes, flybacks, switching transformers, and coils.
- Inductor Range: 3.18 uH to 3.18 H
- Capacitor Range: 0.002 uF to 20,000 uF
- Accuracy: Same as Out-of-Circuit tests for known good inductors and capacitors with no parallel current paths.
- Suggest Removal Indication: Initiated when AC test differs from DC test by more than 20%, or if low level DCR test indicates a leakage path greater than 20% of charge current for capacitors.

Part Number		Price per ea.
92-0300-00	Sencore LC103 Rezolver™ In-Circuit Capacitor and InductorAnalyze	2,495.00

SENCORE HA325 HORIZONTAL OUTPUT & FLYBACK TESTER

NEW

- With one simple hookup, the HA325 quickly identifies what is working and what isn't, without a schematic on any CRT based display
- Automatically analyzes the horizontal output circuits and tells you if they are good or bad and suggests the parts you need to test and repair on the display
- Improves the skill of your service technicians for faster more efficient repairs. Find the horizontal output transistor or IHVT (high voltage transformer), hook up the leads and the HA 325 automatically makes the analysis
- Cuts down on replacement repair costs. Replacing parts that aren't bad can be very expensive especially when parts have to be ordered and the game remains down while parts are on order
- The HA325 helps you to quickly and accurately determine defective parts in the horizontal output circuits

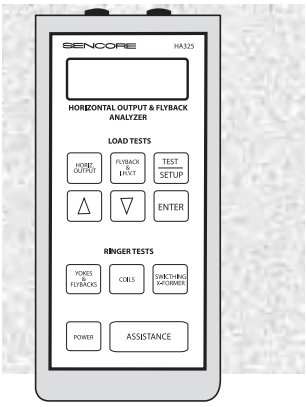

SENCORE

Part Number		Price per ea.
92-0314-00	Sencore HA325 Horizontal Output & Flyback Tester	1,799.00

SENCORE HA2500 UNIVERSAL HORIZONTAL ANALYZER

Now Everything You Need To Localize Horizontal And B+ Supply Defects In Computer Monitors In Less Time And More Profitably Than Ever Before!

- Unique frequency lock and variable horizontal frequency use allows you to quickly service all horizontal circuits no matter the frequency
- Patented "ringer" proves the condition of flybacks and yokes in seconds - even a single shorted turn
- Variable-current limited & protected B+ substitute power supply permits testing of horizontal stages even when the power supply is dead
- Exclusive "Horizontal Output Load Test" makes setup and testing a snap - even without applying AC power for more accurate estimates, fewer damaged replacement parts, and faster diagnosis and repair
- Exclusive "Dynamic Tests" help you analyze the horizontal circuit in powered-up conditions to catch even subtle defects in the power supply, noise, and drive signal
- Portable and field rugged to go on location when bringing the defective product to your bench isn't feasible

NEW

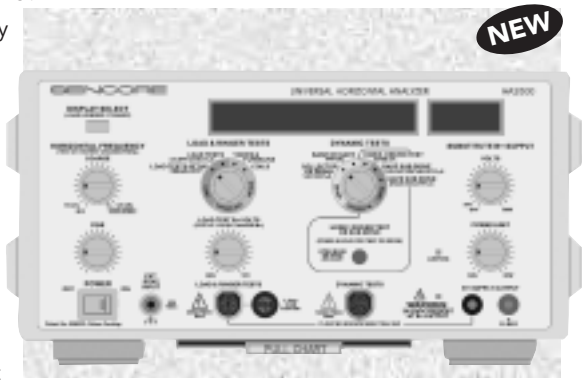

SENCORE

HA2500 Condensed Specifications:

HORIZONTAL FREQUENCY GENERATOR
FUNCTION: - Squarewave generator for Load Tests and Sub Drive functions.
FREQUENCY RANGE: 15 kHz to 125 kHz

EXTERNAL SYNC INPUT:
INPUT SIGNALS: - Horizontal Sync, Composite Sync, Composite Analog Video (± Polarity)
FREQUENCY RANGE: 15 kHz - 125 kHz
SENSITIVITY: Composite Analog Video > .5 VPP Horiz. or Composite Sync > 2 VPP

HORIZONTAL OUTPUT LOAD TEST B+ POWER SUPPLY
VOLTAGE RANGE: - 0 - 18 VDC ± 0.5 volts.
CURRENT LIMIT: 250 mA ± 10%

HORIZONTAL OUTPUT LOAD TEST SETUP
EXCITATION DRIVE: Squarewave 50% duty cycle ± 2%
B+ VOLTS RANGE: 0 - 19.9 volts
VPP RANGE: autoranged 0 - 400 VPP

HORIZONTAL OUTPUT LOAD TESTS
B+ mA RANGE: 0 - 250 mA
TIME µS RANGE: 0.1 µS - 50 µS
TIME µS TRIGGER LEVEL: 5% ± 1% of pos. pulses with VPP > 10 VPP

RINGER TEST
FUNCTION: Approximate coil "Q" determined by exciting the coil and counting ringing cycles to a damped level.

DYNAMIC TESTS (Collector or Drain Meter)
VDC RANGE: Autoranged, 0- 400 volts
VPP RANGE: Autoranged, 0 VPP to 1500 VPP
TIME µS RANGE: 0 - 50 µS
TIME µS TRIGGER LEVEL: 5% ± 1% of pulse VPP >20 VPP

DYNAMIC TESTS (Base or Gate Meter)
VPP RANGE: 0 VPP to 50 VPP

DYNAMIC TESTS (Horizontal Driver Test)
FUNCTION: Measures the horizontal driver stage output current capability by simulating a low impedance base/emitter transistor junction.
BASE mA RANGE: 0 - 2000 mA

DYNAMIC TESTS (Sub Drive)
FUNCTION: Substitute drive optimized to properly drive the base or gate of any horizontal output transistor.
BASE SUB OUTPUT: Squarewave 50%, -2/+6% duty cycle
GATE SUB OUTPUT: Squarewave, 50% duty cycle ±2%

SUBSTITUTE B+ SUPPLY
VOLTAGE RANGE: 30 volts to 180 volts
POWER OUPUT: 2 amps ± 10% to 40 volts, 80 watts ± 10% over 40 volts
POWER LIMIT RANGE: 3 watt (min.) to 80 watt

GENERAL
FLOATING GROUND ISOLATION:
600 volts (DC + peak AC) from "-" terminal to chassis ground with 500 µA
DIGITAL DISPLAY: Vacuum fluorescent matrix, 40 x 2
AC POWER: 105 to 125 VAC 50/60 Hz. May be factory converted to 220 VAC.
SIZE: 6" X 11.5" X 15.5" (15.2 X 29.1 X 39.3 cm) HWD
WEIGHT: 14 lbs. (6.4 kg.)
All specifications allow for 20 minutes of warm-up and are guaranteed at 15 to 35 degrees C.

Part Number		Price per ea.
92-0313-00	Sencore HA2500 Universal Horizontal Analyzer	2,899.00

SEE COLOR AD INSERT PAGE C10

SENCORE CR7000 "BEAM-RITE" MONITOR ANALYZER AND REJUVENATOR

Easily Test and Restore CRTs With The Most Complete Tests Available

- Guaranteed to restore one to two years of extra CRT life
- Keeps older monitors "revenue productive"
- Accurately tests all CRTs to manufacturer specifications, including all gaming and amusement CRTs, all surveillance and sport book CRTs, and all projection CRTs; over 6000 types!
- Complete testing and rejuvenation takes less than 9 minutes right at the game site
- 1 year Sencore warranty on parts and labor
- Toll FREE technical support at 1-800-SENCORE

The easiest to use CRT tester on the market

- Simply connect one of the six supplied adaptors to test virtually all new CRTs without setting and resetting cumbersome setup switches
- Tests all three guns of color CRTs, with simultaneous display of test results
- All test results are displayed with interpretation-free "Good/Bad" results

The most accurate and thorough tests of any CRT tester

- Exclusive sliding "Good/Bad" scale duplicates manufacturer's test for the most accurate test results available
- Exclusive "Low Level" and "High Level" tracking tests locate color tracking problems
- Detects all gun element shorts or leakage

The safest and most effective restoration techniques available

- "Progressive Restoration" guarantees the safest possible restoration
- Six levels of "Progressive Restoration"
- Self-limiting shorts removal function
- Three times the restoration range of other testers providing mild current for marginal guns all the way to the Rejuv level for tough jobs

SENCORE

Newly designed sockets allow easyconnection to hard-to-reach CRTs

- New socket design allows the user to test projection TVs and computer monitors faster and easier

Part Number		Price per ea.
92-0299-00	Sencore CR7000 Beam-Rite Monitor	1,995.00

CAPACITOR WIZARD

The Capacitor Wizard is an extremely FAST and RELIABLE device designed to measure ESR (Equivalent Series Resistance) on capacitors of 1uf and larger "IN CIRCUIT", eliminating the need to remove the capacitor for accurate tests. The Capacitor Wizard finds BAD caps IN CIRCUIT that even VERY EXPENSIVE cap checkers MISS ENTIRELY, even out of the circuit!

Features:

- Meter Range: 0 to 30 Ohms Expanded Scale
- Output Test Signal: 100khz Sine Wave
- Output Voltage: Only 5 milli volts RMS! - will NOT turn on solid state devices
- Meter input resistance: 2.5 Ohm
- Meter Resolution as low as 0.1 Ohm
- Beeper Resolution as low as 50 milli Ohm
- Adjustable "Capacitor Good" beeper
- Power: 4 AA Alkaline batteries
- Battery Life: Over 60 hours
- Size: 7" x 4" x 1.5"
- Probe length: 4 feet
- Recessed "Ohms Zero" and "Beeper Adjust" controls
- UL & CE

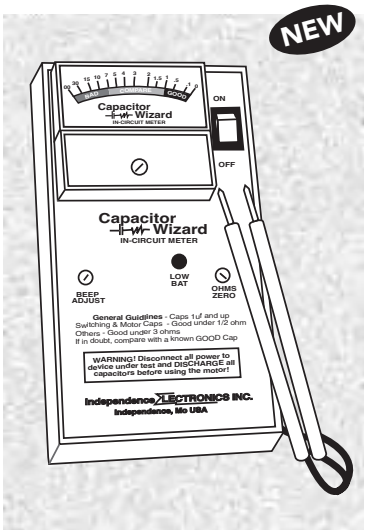

Part Number		Price per ea.
92-0301-00	Capacitor Wizard	179.95

© HAPP CONTROLS

SENCORE SC3100 "AUTO TRACKER" AUTOMATIC 100 MHZ WAVEFORM & CIRCUIT ANALYZER

Now Touch And Test Any Circuit Test Point And Make Autoranged Error Free Measurements In a Fraction of the time!

- A complete waveform and circuit analyzing system in one instrument
- Integrated measurements of all circuit parameters provides fast troubleshooting answers
- Exclusive autoranged timebase and vertical attenuators eliminate wasted time
- All functions microprocessor integrated for ease-of-use
- Auto-Tracking™ digital readout of waveform voltage and frequency with one probe connection
- Full performance, 100 MHz dual trace oscilloscope
- Digital delta measurements to analyze every portion of any waveform

SEE COLOR AD INSERT PAGE C10

NEW

Specifications:

Vertical Amplifiers - DISPLAY MODES: Channel A, inverted channel A (-A), channel B, dual trace (A&B), algebraic sum (A+B) or difference (B-A), vector (X-Y). CALIBRATION ACCURACY: ±3% at 1 kHz. FREQUENCY RESPONSE (100 MHz): AC coupled: ±3 dB of 1 kHz level from 10 Hz to 100 MHz, usable to 150 MHz. SENSITIVITY: 20 mV/div. to 200 V/div. with supplied 39G292 10X probe; 2 mV/div. to 20 V/div. with (optional) DP270 Direct Probe. MAXIMUM INPUT PROTECTION: Supplied 39G292 10X Probe: 2500 volts breakdown (DC + Peak AC).

Horizontal Sweep - SWEEP RATES: 100 milliseconds/division to 20 nanosecond/division. Autorange automatically selects sweep rate to show approximately 2-5 cycles of waveform. ACCURACY: ±3%.

Trigger Circuits - TRIGGER SOURCE: CH A, CH B, AC power line, or external. TRIGGER MODES: NORM, AUTO, TV.

Auto-TrackingTM Digital Tests - DC Volts: DCV FUNCTION: Provides direct reading of DC voltage on selected channel.

ACCURACY: ±0.5% ±2 digits.

Peak-to-Peak Volts - VPP FUNCTION: Provides direct reading of peak-to-peak voltage on selected channel with either X10 or direct probes. ACCURACY: ±2% ±4 counts. FREQUENCY RESPONSE: ±0.5 dB from 20 Hz to 30 MHz,?-3 dB at 100 MHz.

AC Volts - ACV FUNCTION: Calculates RMS sinewave value from PPV measurement. dBm FUNCTION: Calculates dBm measurement from PPV sinewave measurement, referencing 1 mW across 600 Ohms (0 dBm =.7746 volts RMS).

Frequency - Automatically displays the frequency of the signal on selected channel. RANGES: 10.00 Hz to 150 MHz.

ACCURACY: .001% ±1 digit.

Delta Peak-to-Peak - Measures amplitude of intensified area on selected channel.

Delta Time - Measures time of intensified waveform portion.

1/Delta Time - Converts Delta Time reading to equivalent frequency.

Delta DC Volts - FUNCTION: Measures DC voltage level of marked waveform point in respect to ground using the PPV and DCV functions. MARKER: Fully adjustable over entire range of waveform.

Digital Meter Tests - Ohms FUNCTION: Provides in- or out-of-circuit ohms. RANGES: 0.00 to 100 M Ohms. ACCURACY: 0.2% ±2 digits.

Continuity Test - Provides audible tone of continuity. RANGE: 0 to 199 Ohms. Audible tone turns on if resistance is <10 Ohms and turns off if resistance is >15 Ohms, ±2 Ohms.

DC Current - Provides measurement of DC current. RANGES: .001 to 1.99 amp ACCURACY: 0.3% ±2 digits.

General - SIZE: 7.25" x 13.75" x 15" HWD (18.4 x 34.9 x 38.1 cm). WEIGHT: 25 lbs (9.33 kg.). POWER: 105 to 125 VAC, 50/60 Hz.

Part Number		Price per ea.
92-0308-00	Sencore SC3100 "Auto Tracker" Analyzer	3,295.00

TPI 183 DIGITAL MULTIMETER

- Triple display
- PC compatible
- True RMS
- Display Count: 4000
- AC volts: 750; DC volts 1,000
- Basic DC accuracy: 0.3%
- AC amps: 10; DC amps 10
- Capacitance: 10,000uF
- Frequency: 200KHz
- Analog Bar Graph
- Auto Range
- Data Hold
- Min/Max
- Sleep Mode
- CE, cULus3111
- Size: 7.75 x 3.75 x 2.25

NEW

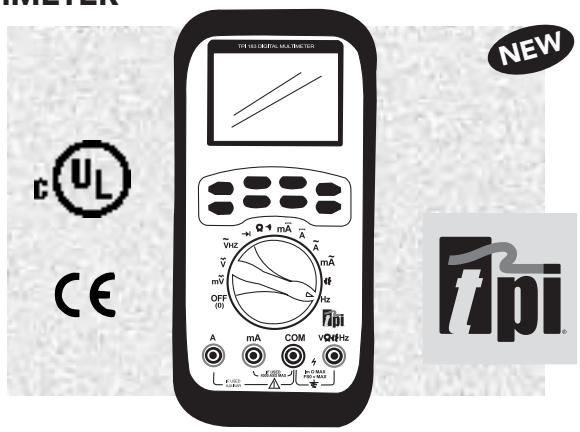

Part Number		Price per ea.
92-1334-00	TPI 183 Digital Multimeter	174.03

TPI 460 HANDHELD OSCILLOSCOPE

A dual channel, 20MHz oscilloscope with true RMS DMM!

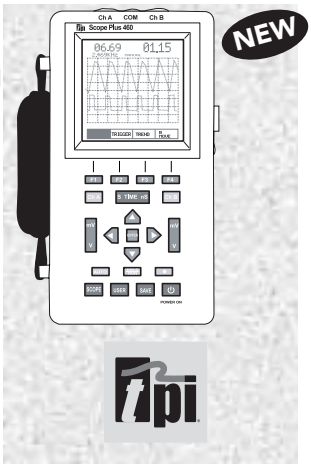

This dual channel portable oscilloscope and dual-input digital multimeter is designed to meet CAT III 600V industrial power system standards. Technicians appreciate the bright backlight of the 3" x 3" LCD and rugged construction inside and out.

20 MHz Bandwidth
Enough bandwidth to capture signals from AC/DC drive motors, sensors, actuators, line and control voltages, UPS and industrial machines.

Sample Rate
A real time sampling of 25 megasamples/sec to capture spikes and dropouts of industrial signals.

Dual Input
View two waveforms on the display for comparison and troubleshooting.

True RMS DMM
Includes a 4000 count True RMS DMM that measures AC/DC volts to 600, frequency to 20MHz, resistance to 20MegOhm, diode test and continuity buzzer.

Bright LCD Backlight
Easy-to-see in any light conditions with user-adjustable brightness levels.

Optically Isolated RS232 Output
Transfer data safely without any direct connections to your computer's systems circuitry.

Part Number		Price per ea.
92-1333-00	Tpi 460 Handheld Oscilloscope	895.95
92-0981-00	Soft Carrying Case	39.95

DIGITAL MULTIMETER WITH AUTOMATIC POLARITY FUNCTION

- Easy to read 3 1/2 digit LCD display
- Measurements: DC current up to 10A, AC and DC voltage up to 600V, resistance up to 2 Mohm
- Diode, transistor and continuity test with buzzer
- Data-hold function and backlight
- Protective yellow holster included
- Dimensions: 2.7" x 5.4" x 1.2"
- Operates on one 9V battery (included)
- Low battery indicator
- Overload protected
- Includes red and black test leads, instruction manual
- Velleman ref. no. DVM850BL
- High quality at an amazing price!

Tester Specifications	
DC Voltage	200m/2/0/100
AC Voltage	200/600 DC
Current	200µ/2m/20m/200m/10A
Resistance	200/2k/20k/200k/2M

Part Number		Price per ea.
49-6122-00	Digital Multimeter with Automatic Polarity Function	18.75

TPI 440 TRUE RMS DIGITAL MULTIMETER

4000 Count True RMS DMM with waveform capabilities

6 Instruments in 1

1. Auto Ranging 4,000 Count True RMS DMM
   Full capabilities of a 4,000 Count True RMS DMM 0.3% basic DC accuracy and 9 measurement functions.
2. 1 MHz Oscilloscope
   View industrial power signals such as motor controls, UPS, switching power supplies, and PLC controls with detail and clarity.
3. Trend Mode
   Chart recorder-like display monitors slow changing events with ease.
4. Component Test
   Check voltage-current signatures on capacitors, resistors, semiconductors and much more.
5. Logic Test
   Indicates transitions up to 2 MHz.
6. Frequency Counter
   Measure low frequency signals from 1Hz to 2MHz and display duty cycle, pulse width and period.

PC/Printer Compatibillity to RS-232C Port Optional accessory No. A402 enables data or waveform to be downloaded to PC for archiving, processing and report generation. Perfect for extended monitoring. 8 waveform storage locations enables remote data acquisition for later viewing or downloading to a PC. NiCad battery with charger, test leads, and alligator clips are standard accessories.

True RMS
True RMS allows the user to obtain accurate measurements of non-sinusoidal AC voltage and current waveform found in controls and circuits.
220 Volt 50/60Hz AC/DC Adapter is included when specifying Model No. 440X. Specify Part No. A405.

Includes: Insulated test leads with alligator clips, power supply, NiCad battery and instruction manual.

Part Number		Price per ea.
49-1448-00	TPI 440 True RMS Digital Multimeter	299.95

5-FUNCTION, 12-RANGE MULTIMETER

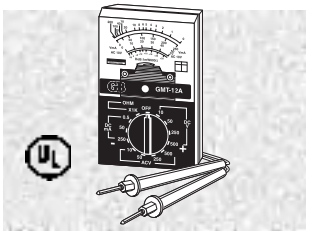

- Tests AC/DC voltage, DC current, resistance and decibels
- Includes two safety test leads, instruction manual and battery
- Impact resistant shell
- Convenient pocket-size instrument

Tester Specifications			
DC Voltage	0-10-50-250-500 Volts	**Accuracy**	DC Voltage ± 4%
AC Voltage	1-10-50-250-500 Volts		AC Voltage ± 5%
DC Current	0-0.5-50-250 mA		Resistance ± 4° Arc of
Resistance	2 Megohms	Scale	of Length
Decibels	-20dB to 56dB on AC Volt Ranges	**Sensitivity** and DC	2000 ohms per volt AC

Part Number		Price per ea.
49-0960-00	5-Function, 12-Range Multimeter	13.80

© HAPP CONTROLS

FLUKE 87/III DIGITAL MULTIMETER

- Digital Display
- 4,000 count, 20,000 count in high resolution mode
- Large, high contrast, easy-to-read digital display with an analog pointer
- 32 Seg Pointer
- Backlit display with on/off controls for easy viewing in all lighting conditions
- True-rms at readings to deliver the correct measurement, even when harmonics are present
- Automatic Touch Hold automatically triggers the meter to capture stable non-zero readings, freeing you to focus on the test probes
- Fused Current Inputs
- Continuity
- MIN/MAX Mode captures fast transients
- Peak MIN/MAX - 250 ÂµSec (87 III and 87/E only)
- Relative Mode
- Diode Test
- Sleep Mode - 30 minutes
- IEC 61010 Rating - CATIII-1000V
- Battery access door that enables changing batteries without breaking the calibration seal
- Lifetime Fluke warranty

Part Number		Price per ea.
49-1534-00	Fluke 87/III Digital Multimeter	359.00

FLUKE 170 SERIES DIGITAL MULTIMETERS

- Lifetime Warranty
- IEC 1010 CAT IV 600V, CAT III 1000V safety rating
- 6000 count display provides improved resolution
- True-rms ac voltage and current for accurate readings on all waveforms
- Min/Max/Average recording
- Frequency, capacitance & resistance capabilities
- The 179 has a backlight to illuminate the screen in dark workspaces
- Easy access battery door to change the battery without breaking the calibration seal
- Drop protected to 1 meter
- Over molded case features integrated probe holders
- Compatible with ToolPak™ meter hanging kit
- The 179 measures temperature in °C and °F

Part Number		Price per ea.
49-1367-00	Fluke 179 Digital Multimeter	214.00
92-1106-00	Fluke 175 Digital Multimeter	174.00

POCKET DIGITAL MULTIMETER

- Autoranging
- Auto Power OFF
- Bar Graph
- 3 1/2 Digit LCD, 0.35" H
- 3200 Count
- 10M1/2 Input Z
- Data Hold
- Range Hold
- Diode Test
- Audible Continuity Test
- 32M1/2 FS
- Overload Protection
- 1-Year Limited Warranty
- Batteries, test leads, carrying case and operating instructions included

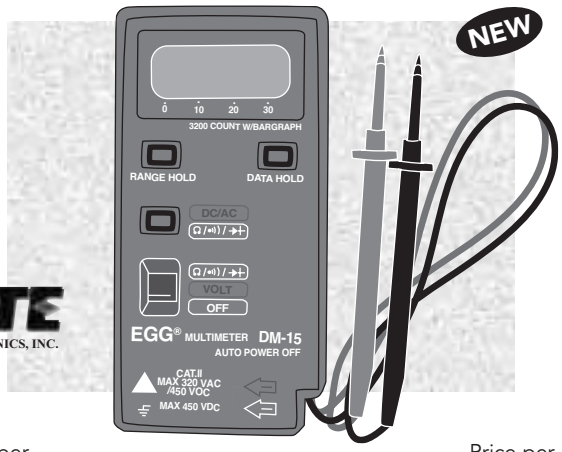

NTE ELECTRONICS, INC.

General Specifications
Display: 3.5 Digit LCD, 0.35" high, with polarity indicator.
Overrange Indication: "OL" is displayed.
Auto Power Off: Approx. 10 min. after mode or function change.
Measurement Rate: 2 times per second.
Operating Environment: 0°C to 40°C, <70% relative humidity.
Storage Environment: -20°C to 60°C, <80% relative humidity.
Power: 1.5V button-type batteries (2) IEC LR-44, NEDA 1166A.
Low Battery Indicator: "B" is displayed.
Dimensions, Weight: 2.2" wide x 4.4" long x .41" thick (56mm x 111.5mm x 10.5mm). Net weight 3oz. (86g).

Part Number		Price per ea.
NTEDM-15	Pocket Digital Meter	33.23

HARD POINT TEST LEAD SET

- Comfort grip probe with PVC insulated test leads
- Extremely hard alloy tips resist wear
- Distinctive comfort grip probes
- Economical PVC insulated leads
- Cat III, 1000V, 10A
- UL listed

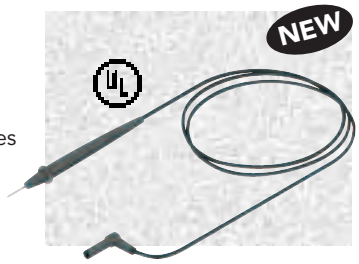

Part Number		Price per set
49-1762-00	Hard Point Test Lead Set	12.95

15" JUMPER WIRES WITH MINIATURE ALLIGATOR CLIPS

NEW

- 10 Jumper wires, 27 AWG, 15" long
- Handy test leads with insulated alligator clips attached to ends
- Ideal for breadboarding, experiments, temporary hookups
- Package contains black, red, white, green jumpers and yellow jumpers

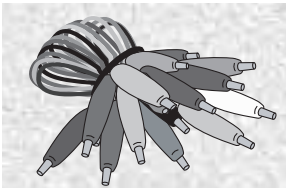

Part Number		Price per set
95-1809-00	15" Jumper Wires With Miniature Alligator Clips	8.35

ALLIGATOR CLIP SET

- Set includes 5 red and 5 black alligator clips
- Rubber insulators are 1-1/2" long

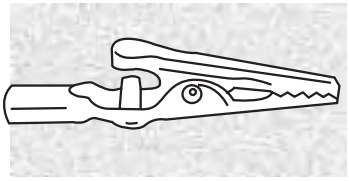

Part Number		Price per set
43-0825-00	Alligator Clip Set	5.55

HEAT GUN

- Multi-Uses: Heat shrink tubing, drying, thawing, heating liquids, stripping paint, etc.
- Dual temperature: 1200˚F(1000w) and 790˚F(400w)
- 3-way switch: HI-OFF-LOW
- 3-wire ground plug, 6' power cord
- Lightweight: 22 oz. w/cord
- UL listed

Part Number		Price per ea.
92-0113-00	Heat Gun	69.16

Visit Our Web Site:
happcontrols.com
for *NEW* Product Updates!!

TEST LEAD SET

- Also known as jumper cords
- 5 pair leads per set; 10 leads total
- Insulated alligator clips on both ends
- 14" length
- The colors of leads are white, green, black, yellow and red

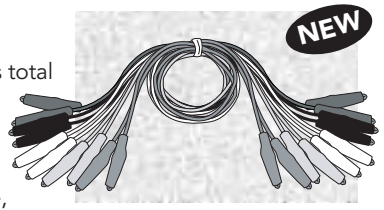

Part Number		Price per set
49-0325-00	Test Lead Set	6.05

HEAVY-DUTY TEST LEAD SETS

- 5 leads per set
- Alligator clips on both ends
- Colors for each cord kit are white, green, black, yellow and red

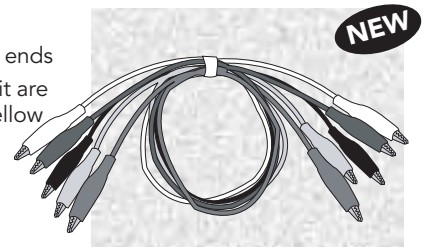

Part Number		Price per set
95-0051-00	22" Test Lead Set	4.20

UNIVERSAL SOLDERLESS TEST LEAD SET

- Includes:
  - Two 42" flexible, vinyl covered test leads, heavily insulated, 80-strand copper conductors (1 black, 1 red)
  - Color coded spade lugs
  - Test prod phone tips and NP phone tips
  - Strong spring action alligator clips

Part Number		Price per set
49-0326-00	Universal Solderless Test Lead Set	7.30

DO YOU WANT TO KNOW EACH TIME YOUR ORDER SHIPS OUT?

e-mail notification and order **tracking information** is now available from Happ Controls! Contact your sales representative or e-mail our customer service department at: **info@happcontrols.com** with your account information.

PAN HEAD PHILLIPS MACHINE SCREWS

• Minimum order 100 pieces

Part Number	Description	Finish	Price per ea.
35-0257-00	2-56 x 1/4	Zinc	.15
43-0065-00	4-40 X 1/8	Zinc	.15
95-0003-00	4-40 x 1/4	Zinc	.15
43-0902-00	4-40 x 5/16	Zinc	.15
43-0901-00	4-40 x 3/8	Zinc	.15
43-0137-00	4-40 x 1/2	Zinc	.15
43-0158-00	4-40 x 3/4	Zinc	.15
43-0898-00	4-40 x 7/8	Zinc	.15
43-0873-00	4-40 x 1	Zinc	.15
43-0897-00	4-40 x 1-1/2	Zinc	.15
43-1007-00	6-32 x 1/8	Zinc	.15
43-0020-00	6-32 x 3/16	Zinc	.15
43-0772-00	6-32 x 1/4	Zinc	.15
43-0971-00	6-32 x 1/4 sem	Zinc	.15
42-0314-00	6-32 x 3/8	Zinc	.15
43-0290-00	6-32 x 1/2	Zinc	.15
43-0679-00	6-32 x 5/8	Zinc	.15
43-0371-00	6-32 x 3/4	Zinc	.15
43-0868-00	6-32 x 3/4 sem	Zinc	.15
43-1064-00	6-32 x 7/8	Zinc	.15
43-0326-00	6-32 x 1	Zinc	.15
43-0896-00	6-32 x 1-1/4	Zinc	.15
43-0895-00	6-32 x 1-1/2	Zinc	.15
43-0894-00	6-32 x 2-1/2	Zinc	.15
43-0052-00	8-32 x 3/16	Zinc	.15
43-0409-00	8-32 x 1/4	Zinc	.15
43-0435-00	8-32 x 5/16	Zinc	.15
43-1319-00	8-32 x 3/8	Zinc	.15
43-0285-00	8-32 x 1/2	Zinc	.15
43-0382-00	8-32 x 5/8	Zinc	.15
43-0307-00	8-32 x 3/4	Zinc	.15
43-0327-00	8-32 x 1	Zinc	.15
43-0677-00	8-32 x 1-1/4	Black	.15
43-0754-00	8-32 x 1-1/2	Zinc	.15
43-0293-00	8-32 x 1-3/4	Zinc	.15
43-1038-00	10-24 x 3/8	Zinc	.15
43-0879-00	10-24 x 5/8	Zinc	.15
43-0878-00	10-24 x 1/2	Zinc	.15
50-8324-00	10-32 x 1/4	Zinc	.15
43-0184-00	10-32 x 3/8	Zinc	.15
43-0179-00	10-32 x 1/2	Zinc	.15
43-0884-00	10-32 x 5/8	Zinc	.15
43-0994-00	10-32 x 3/4	Zinc	.15
43-0131-00	10-32 x 1	Zinc	.15
43-1011-00	10-32 x 1-1/4	Zinc	.15
43-1111-00	10-32 x 1-1/2	Zinc	.15
43-0130-00	10-32 x 2	Zinc	.15
43-0866-00	1/4-20 x 1/2	Zinc	.15
43-0862-00	1/4-20 x 3/4	Zinc	.15
43-0865-00	1/4-20 x 1	Zinc	.15
43-0963-00	1/4-20 x 1-1/4	Zinc	.15
43-0864-00	1/4-20 x 1-1/2	Zinc	.15
43-0863-00	1/4-20 x 2	Zinc	.15

THREAD FORMING SHEET METAL SCREWS

• Minimum order 100 pieces

• Pan head Phillips type

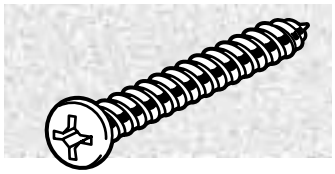

Part Number	Type	Description	Finish	Price per ea.
43-1028-00	A Point	#4 x 1/4	Zinc	.15
43-0436-00	B Point	#4 x 1/4	Zinc	.15
43-1027-00	A Point	#4 x 3/8	Zinc	.15
43-0316-00	B Point	#4 x 1/2	Zinc	.15
43-0064-00	High/Low	#6 x 3/8	Zinc	.15
43-1063-00	A Point	#6 x 1/2	Zinc	.15
90-1016-00	High/Low	#6 x 1/2	Zinc	.15
43-0083-00	A Point	#6 x 3/4	Zinc	.15
43-0084-00	A Point	#6 x 1	Zinc	.15
90-1005-00	B Point	#8 x 1/2	Zinc	.15
43-1021-00	A Point	#8 x 5/8	Zinc	.15
43-0139-00	A/B Point	#8 x 3/4	Zinc	.15
43-0885-00	A Point	#8 x 1	Zinc	.15
43-0304-00	A Point	#8 X 1-1/2	Zinc	.15
43-0869-00	A Point	#10 x 3/8	Zinc	.15
43-0587-00	A/B Point	#10 x 1/2	Black	.15
43-0883-00	A Point	#10 x 3/4	Zinc	.15
43-0882-00	A Point	#10 x 1	Zinc	.15

FLAT HEAD PHILLIPS SCREWS

• Minimum order 100 pieces

• Zinc plated

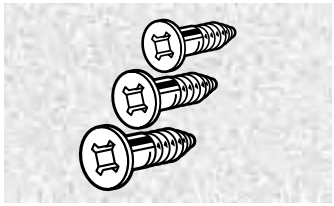

Part Number	Description	Price per ea.
43-0724-00	4-40 x 1/2	.15
43-0840-00	4-40 x 5/8	.15
43-0949-00	6-32 x 1/2	.15
43-0409-10	8-32 x 1/4	.15
43-0173-00	8-32 x 3/8	.15
43-0132-00	8-32 x 1/2	.15
43-1042-00	8-32 x 3/4	.15
43-0947-00	10-32 x 1/4	.15
43-0104-00	10-32 x 1-1/2	.15
43-0877-00	10-32 x 1	.15

Visit Our Web Site:
happcontrols.com
for **NEW** Product Updates!!

HEX HEAD STEEL KEP NUTS

- Minimum order 100 pieces

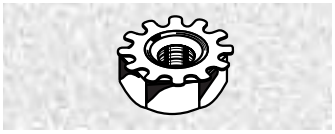

Part Number	Description	Finish	Price per ea.
43-1018-00	4-40	Zinc	.15
42-0056-00	6-32	Zinc	.15
42-0082-00	8-32	Zinc	.15
90-1204-00	10-24	Black	.15
42-0093-00	10-32	Zinc	.15
43-0984-00	5/16	Zinc	.15
43-0175-00	4MM	Zinc	.15

COTTER PINS

- Minimum order 100 pieces
- Zinc plated

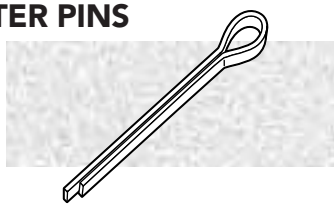

Part Number		Price per ea.
42-0022-00	1/16 x 1/2	.15
43-0951-00	1/16 x 3/4	.15
43-0213-00	3/32 x 1/2	.15
43-0837-00	7/64 x 1 (univ.)	.44
43-0839-00	1/8 x 1-1/4	.15
43-0838-00	5/32 x 1 (univ.)	.15

NYLOCK ELASTIC STOP NUT

- Minimum order 100 pieces
- Zinc plated

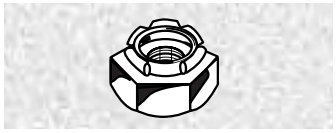

Part Number		Price per ea.
43-1322-00	4-40	.14
43-0375-00	6-32	.15
43-0211-00	8-32	.15
43-0723-00	10-24	.14
43-1005-00	10-32	.15
43-0121-00	1/4-20	.15
43-0056-00	1/2-13	.15
43-0991-00	5/16-18	.15

FLAT WASHERS

- Minimum order 100 pieces
- Zinc plated

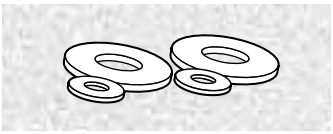

Part Number	Description	Finish	Price per ea.
90-1206-00	#4	Zinc	.15
43-0741-00	#6	Zinc	.15
43-0502-00	#8	Black	.15
43-0995-00	#10	Zinc	.15
43-0215-00	1/4	Zinc	.15
43-1062-00	1/4" (fender) ID x 1-1/2" OD	Zinc	.15
43-0057-00	5/16	Zinc	.15
43-0888-00	5/16" (fender) ID x 1-1/2" OD	Zinc	.15

HEX HEAD STEEL NUTS

- Minimum order 100 pieces

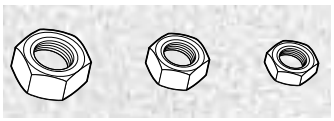

Part Number	Description	Finish	Price per ea.
43-0163-00	2-56	Zinc	.15
43-0010-00	4-40	Zinc	.15
43-0094-00	6-32	Black	.15
43-1292-00	8-32	Zinc	.15
43-0968-00	10-24	Zinc	.15
43-0867-00	10-32	Zinc	.15
43-0903-00	1/4-20	Zinc	.15
43-0935-00	3MM	Zinc	.15
43-0175-00	4MM	Zinc	.15
43-0125-00	5MM	Zinc	.11
43-0844-00	6-32 Acorn	Zinc	.19

ROLL PINS

- Carbon Steel
- Minimum order 100 pieces
- Zinc plated

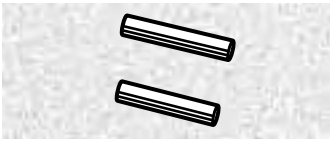

Part Number	Description	Bally Ref. No.	Price per ea.
43-0912-00	1/8 x 3/4	P-1637-11	.15
43-0911-00	1/8 x 1	P-1637-2	.15
43-0910-00	5/32 x 7/8	P-1637-53	.15
43-0907-00	3/16 x 7/8	P-1637-56	.15
43-0906-00	3/16 x 1-1/2	(Hopper)	.15

© HAPP CONTROLS

STAR LOCK WASHERS

- Internal and external available
- Minimum order 100 pieces

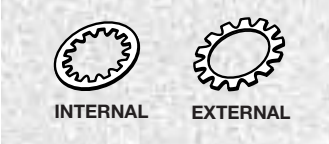

Part Number		Finish	Price per ea.
35-0260-00	#4 Internal	Zinc	.15
43-0874-00	#6 Internal	Zinc	.14
90-1011-99	#6 External	Zinc	.15
43-0875-00	#8 Internal	Zinc	.14
43-0324-00	#8 External	Zinc	.15
43-0043-00	#10 Internal	Zinc	.14
43-0037-00	#10 External	Zinc	.15
43-0545-00	1/4 Internal	Black	.14
43-0237-00	1/4 External	Zinc	.15

CARRIAGE BOLTS

- Carbon Steel
- Minimum order 100 pieces

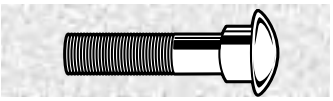

Part Number		Price per ea.
43-0021-01	8-32 x 1/2	.15
43-0049-00	10-24 x 1/2	.15
43-0410-00	10-24 x 1	.15
43-0462-00	10-24 x 1-1/2	.15
43-0149-00	10-24 x 2	.15
43-0374-00	1/4-20 x 2	.15
43-0889-00	1/4-20 x 2-1/2	.15
43-0890-00	1/4-20 x 3-1/2	.15
43-0887-00	5/16-18 x 2	.15
43-0886-00	5/16-18 x 2-1/2	.15

LOCK WASHERS

- Minimum order 100 pieces
- Zinc plated

Part Number		Finish	Price per ea.
43-0202-00	#4 metric	Zinc	.15
43-0246-00	#6 metric	Zinc	.15
43-0204-00	#8 metric	Zinc	.15
43-0240-00	#10 metric	Zinc	.15
43-0343-00	1/4 split ring	Black	.15
43-0325-00	#8 split ring	Zinc	.15

E-RINGS

- Sold in eaches
- Zinc plated
- Minimum order 20 pcs.

Part Number	Mfg. Ref. No.	Description	Price per ea.
43-0528-00	————	3/32" ID	.15
43-0529-00	————	5/32" ID	.15
43-0009-00	————	1/8" ID	.15
43-0008-00	P-6316-4	3/16" ID	.15
43-0532-00	P-2891-5	11/64" ID	.15
43-0905-00	P-6316-5	7/32" ID	.15
43-0118-00	P-6316-6	1/4" ID	.15
43-0245-00	P-2891-7	5/16" ID	.15
43-0223-00	P-2891-8	3/8" ID	.15
43-0119-00	P-2891-10	1/2" ID	.15
43-0060-00	P-2891-11	5/8" ID	.15
43-0941-00	————	4mm ID	.15
43-0940-00	————	6mm ID	.15

MISCELLANEOUS FASTENERS

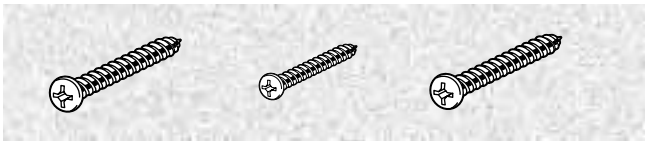

Part Number		Price per ea.
43-1033-00	1/4 x 1-1/2 Hex Head Lag Bolt (For Stools)	.15
43-0871-00	#6 x 1/2 Wood Screw	.09
43-0511-00	#8 x 1/2 Panhead Phillips TEK Screw	.25
43-0725-00	1/4-20 x 1 Hex Head Cap Screw	.30
43-0831-00	1/4-20 x 1-1/2 Hex Head Cap Screw	1.55
43-0239-00	1/4-20 x 2-1/2 Hex Head Cap Screw	.25
43-0845-00	#6 x 1 Drywall Screw	.70
43-0876-00	4mm x 10mm Hex Head Screw	2.05
43-0849-00	3mm x 6mm Phillips Panhead M.S.	.09
43-0850-00	3.5mm x 8mm Phillips Panhead M.S.	.12
43-0167-00	3mm x 10mm Phillips Panhead M.S.	.20

RIVETS

- Packed in Boxes of 100
- Minimum order 100 pcs

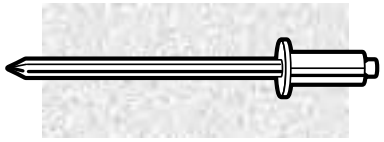

Part Number	Size	Type	Price per ea.
43-0933-00	1/8" x 1/4" w/1/4" Head	Aluminum	.15
43-0855-00	1/8" x 3/16" w/1/4" Head	Aluminum	.15
43-0932-00	1/8" x 1/2" w/1/4" Head	Aluminum	.15
43-0930-00	1/8" x 3/8" w/1/4" Head	Aluminum	.15
43-0854-00	3/16" x 5/8"w/3/8" Head	Aluminum	.15
43-0856-00	1/8" x 1/8" w/1/4" Head	Steel	.15
43-0859-00	1/8" x 1/4" w/1/4" Head	Steel	.15
43-0931-00	1/8" x 3/8" w/1/4" Head	Steel	.15
43-0860-00	3/16" x 3/8" w/3/8" Head	Steel	.15
43-0861-00	.37 O.D. x .13 I.D. x .06T	Aluminum Washer	.15

HAPP CONTROLS "QUALITY COAT" SPRAY PAINT

- Featuring the patented EZ Touch® Fanspray® Nozzle giving the user better spray control with optimum coverage
- 15 minutes dries to touch
- For indoor/outdoor use
- Contains high amounts of solids for maximum coverage on wood and metal
- Lead and fluorocarbon free
- Professional results with the patented Fanspray® Nozzle
- Vertical or horizontal Fanspray® pattern allows easy spraying of all surfaces
- Net weight 11 oz.
- 12 cans per case

Part Number		Price per ea.	L/12
29-1011-00	Gloss Black	4.30	3.15
29-1012-00	Semi-Gloss Black	4.30	3.15
29-1026-00	Appliance White	4.30	3.15

All Spray Paints use the EZ Touch® Fanspray® Nozzle.

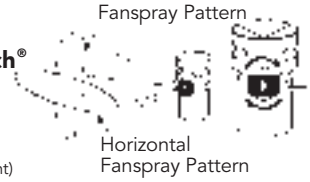

(Except Spatter Paint)

MINI RAZOR BLADE HOLDER AND SCRAPER

- Blade easily snaps in and out
- Blade can be stored upside down for safety
- Holds blade securely for scraping jobs
- Includes one blade

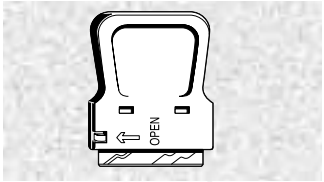

Part Number	Description	Price per ea.
49-5053-00	Mini Razor Blade Holder and Scraper	1.15

RAZOR BLADES

- Single edge
- Industrial quality
- Sold 100 per box

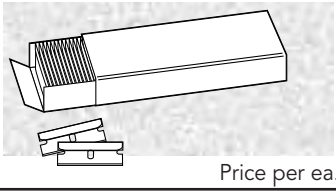

Part Number		Price per ea.
49-0926-00	Razor Blades	7.30

TEFLON PIPETHREAD SEALANT TAPE

- White Teflon seals and lubricants pipe threads
- 1/2" x 520"

Part Number		Price per ea.	L/12
39-0032-00	Teflon Pipethread Sealant Tape	1.90	1.65

SPRAY PAINT, BY KRYLON

- Featuring the patented EZ Touch® Fanspray® Nozzle
- Dries to touch in approximately 15 minutes
- For professional and industrial use
- Interior/Exterior use
- Net wt. 12 oz.
- 12 per case

Part Number		Price per ea.	L/12
29-1013-01	Semi-Flat Black	4.30	4.05
29-1013-02	Gloss Black	4.30	4.05
29-1013-03	Appliance White	4.30	4.05
29-1086-00	Flat White	4.30	4.05
29-1013-04	Flat Black	4.30	4.05
29-1013-10C	Coke Red	4.30	4.05
29-1013-19	Machinery Gray	4.30	4.05
29-1013-20	Aluminum	4.30	4.05
29-1015-00	Gray Primer	4.30	4.05
29-1166-00	Gold	4.30	4.05
29-1029-01	Cordova Brown	4.30	4.05
29-1081-00	Light Beige	4.30	4.05
29-1196-00	Clear Acrylic	5.65	5.20

"SPATTER" PAINT, BY KRYLON

- Add beauty to your used machines with this extra touch of class
- Attractive machines attract more customers
- Reduces and hides graffiti
- Interior use only
- Net wt. 11 oz.
- 6 per case

Part Number		Price per ea.	L/12
29-1022-BA	Spatter Paint – Black / Aqua	7.30	6.75
29-1022-BG	Spatter Paint – Black / Gray	7.30	6.75
29-1022-GW	Spatter Paint – Gray / White	7.30	6.75

SNAP & SPRAY AEROSOL CAN HOLDER

- Transforms any spray can into a spray gun
- Installs easily
- Eliminates finger fatigue
- Reusable

Part Number		Price per ea.	L/12
29-1110-00	Snap & Spray Aerosol Can Holder	2.65	2.40

GAFFERS TAPE

NEW

- Leaves no residue
- Great for Audio/Visual departments
- For wrapping or bundling wire, metals and plastics
- Also used for touch screen monitors
- Protects and anchors electrical wiring
- Seals out moisture and dust
- Heavy-duty vinyl coated waterproof cloth backing with excellent flexibility
- High tack tape with excellent adhesion
- Matte finish reduces light reflection
- 2" X 60 yards
- Color: Black

Part Number		Price per ea.
39-0085-00	Gaffers Tape	15.60

© HAPP CONTROLS

MASKING TAPE

- Protect the areas you are not painting
- 60 yards long per roll
- Strong adhesive backing

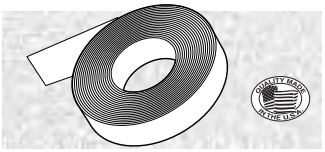

Part Number		Price per ea.
39-0014-00	1" Masking Tape	3.15
39-0018-00	2" Masking Tape	4.90

DUCT TAPE

- Polyethylene coated cloth
- Used for holding down carpet
- 2" x 60 yards
- 24 per case

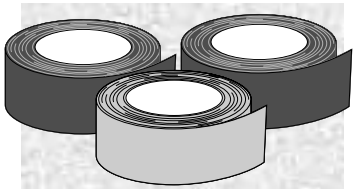

Part Number		Price per ea.
39-0019-00	Gray Duct Tape	7.30
39-0045-00	Red Duct Tape	8.85
39-0044-00	Black Duct Tape	8.85

GLASS FILAMENT TAPE

- Ideal for heavy-duty packaging
- Strong adhesive backing
- 1" x 60 yards long

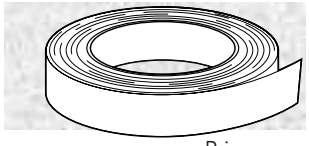

Part Number		Price per ea.
39-0007-00	Glass Filament Tape	6.15

DOUBLE FACE FOAM TAPE

- All purpose tape allows you to hang light objects or signs to games, walls, glass
- High strength adhesive on both sides
- 36 yards long

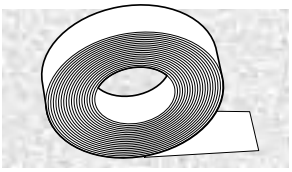

Part Number		Price per ea.
39-0013-00	3/4" Double Sided Foam Tape, White	22.80
39-0013-10	3/4" Double Sided Foam Tape, Black	21.75
39-0041-00	1/4" Double Sided Foam Tape, Black	21.65

COLD SHRINK TAPE

- Amazing tape allows you to wrap around a leaking pipe, hose, cable, etc. and the tape will form into a rubber mold stopping any more water from escaping
- Removing is easy, just slit the tape mold lengthwise
- No heat required
- Waterproof and non-toxic
- A must for every toolbox
- 3/4" x 30' long

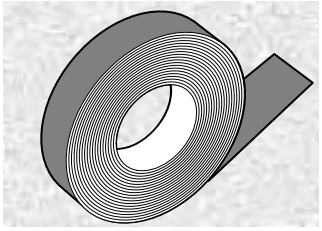

Part Number		Price per roll
39-0012-00	Cold Shrink Tape	10.85

CAUTION SAFETY TAPE

- Non-pressure sensitive vinyl barricade tape
- High visibility
- 3" W x 1000 ft.
- 8 per case

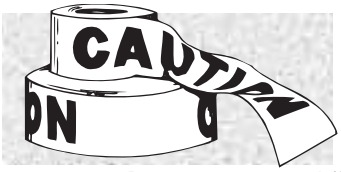

Part Number		Price per ea.	L/8
27-1224-00	Caution Safety Tape	15.75	12.10

3M™ ELECTRICAL TAPE

- 3M Scotch Super 33+ Vinyl Electrical Tape, the Industry Standard
- Now it's more flexible, stronger and stickier than ever – especially in cold weather
- Highly conformable all-weather tape
- UL listed, CSA certified 0° C to 105° C
- Primary insulation for wire cable splices up to 600 V
- In handy hard plastic container
- 3/4" x 66' long

Part Number		Price per roll	L/10
49-0902-00	3M Electrical Tape	5.85	5.20

PLASTIC ELECTRICAL TAPE

- Dielectric over 10,000 V
- U.L. listed
- 3/4" W x 60 ft.
- Sold in packs of 10 only

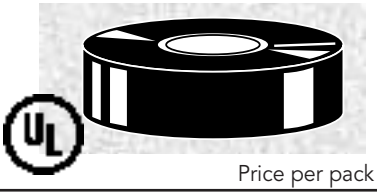

Part Number		Price per pack
39-0038-00	Plastic Electrical Tape-10 pack	10.20

DELUXE 2" TAPE DISPENSER

- Pistol grip style
- Engineered for long wear and ease of use
- Adjustable brake provides tape tension
- Holds up to 2" wide rolls on a 3" core

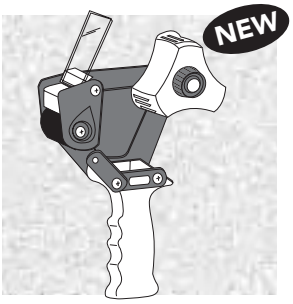

Part Number		Price per ea.
98-MTDGF103	Deluxe 2" Tape Dispenser	13.25

POLYPROPYLENE PACKAGING TAPE

- Clear
- 2" x 55 yards long per roll
- Strong adhesive backing
- Made in the U.S.A.

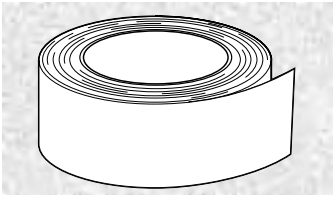

Part Number		Price per roll	L/12	L/24
39-0008-00	Polypropylene Packaging Tape	1.90	1.75	1.55

3M™ CLEAR DOUBLE SIDED TAPE

- All purpose tape with excellent adhesion
- Easily adheres to metal, glass, formica and other hard surfaces

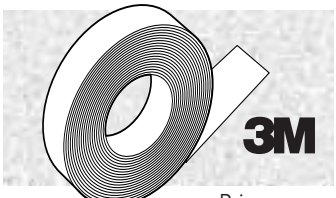

Part Number		Price per ea.
39-0039-0	3M Clear Double Sided Tape, 1/4" x 36 yds. Sold in Boxes of 2 Rolls	15.75
39-0040-00	3M Clear Double Sided Tape, 1/2" x 36 yds. Sold Per Roll	12.10

3M DUAL LOCK™ LOW PROFILE RECLOSABLE FASTENER

NEW

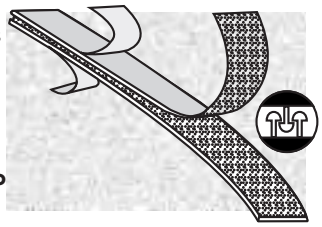

- Pressure sensitive adhesive backing bonds to many surfaces
- Numerous interlocking mushroom-shaped stems positively "snap" together
- **Unlike some reclosable fasteners, this is self-mating so only one roll needed reducing inventory**
- Light-weight, thin profile (0.067", 1.7mm)
- 1" wide, clear color
- Clear acrylic adhesive, -20°F to 150°F
- Stemmed surfaces glide over each other for easy positioning prior to pressing and snapping together
- 75 ft per roll; sold by the foot
- 3 rolls per case

Uses include:
Electronics, exhibits, trade shows, Point of Purchase, framing
Anywhere you need easy access or quick assembly

Part Number		Price per ft.
90-0015-00	3M Dual Lock™ Low Profile Reclosable Fastener	1.35

VELCRO® HOOK AND LOOP TAPE

NEW

- For fastening a wide variety of items
- Adhesive backing
- .75", 1" or 2" wide tape
- Color: Black
- 25 yards. per roll
- Sold per yard

Part Number		Price per yd.
90-0003-03	.75" Velcro Loop Side Only	2.10
90-0004-03	.75" Velcro Hook Side Only	2.10
90-0003-01	1" Velcro Loop Side Only	3.15
90-0004-01	1" Velcro Hook Side Only	3.15
90-0003-02	2" Velcro Loop Side Only	4.00
90-0004-02	2" Velcro Hook Side Only	4.00

VELCRO ONE-WRAP CABLE TIES

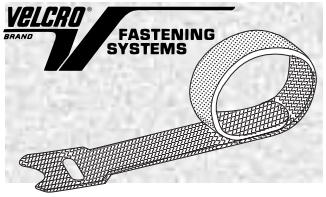

- Hundreds of uses
- Ideal for cord and cable control
- Can be reused numerous times
- Size: .5" wide x 6" long
- Color: Black

Part Number		Price per ea.
90-0011-00	Velcro One-Wrap Cable Ties	.48

THERMAL PRINTER CLEAN-PENN™

NEW

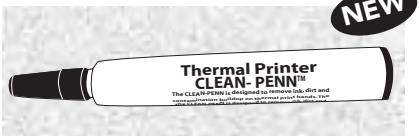

- Specially designed to remove ink, dirt and contamination buildup on thermal print heads
- Allows printer to printer cleaner, clearer and crisper
- Just swipe CLEAN-PENN™ across entire printer head surface
- Use every time paper stock is changed

Part Number		Price per ea.	L/24
29-0003-00	Thermal Printer CLEAN-PENN™	1.25	1.15

HAPP CONTROLS DOLLAR BILL CLEANING CARD

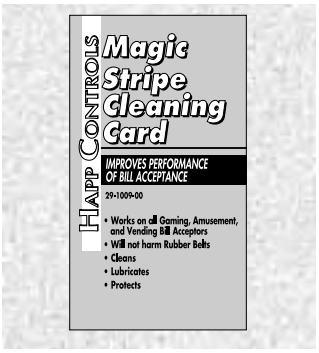

- To clean, just insert like a dollar bill
- Works on all Gaming, Amusement and Vending bill validators
- Greatly increases the acceptance of dollar bills by cleaning & maintaining the hard to reach insides of the bill validators
- Special cleaning solution will not harm rubber belts
- Cleans, lubricates and protects all in one easy motion

Part Number		Price per ea.	L/50
29-1009-00	Happ Controls Dollar Bill Cleaning Card	.95	.84

"ALCOHOL FREE" DOLLAR BILL CLEANING CARD

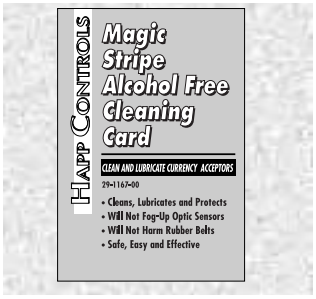

- Protect your equipment
- Works on all dollar bill validators
- Removes dirt, oil, and other contaminants from magnetic heads and photo and optic sensors
- Safe, easy and effective
- Will not harm rubber belts
- Will not fog up optic sensors

Part Number		Price per ea.	L/50
29-1167-00	"Alcohol Free" Cleaning Card	.95	.84

MAG STRIPE READER CLEANING CARD

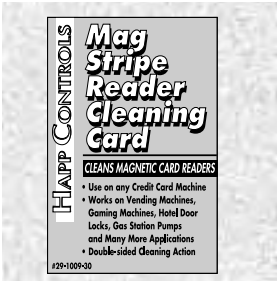

- Helps performance and durability of your equipment
- Used regularly, they will save you time & money in equipment repairs & downtime
- Cleans dirt, oil and residue from magnetic, optical and bar code reading equipment
- Double-sided cleaning card cleans any way you swipe
- Works on ATM's, Hotel Door Locks, Video Vending Machines, Telephones, Gas Pump Credit Card Readers, and many more applications

Part Number		Price per ea.	L/50
29-1009-30	Mag Stripe Reader Cleaning Card	1.10	.93

HAPP CONTROLS THERMAL PRINTER CLEANING CARD

NEW

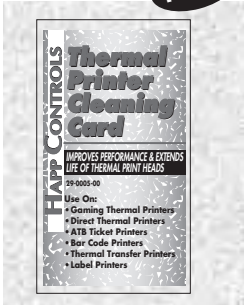

- Safely removes all dirt, ink, tape, residue, adhesive and other contaminants from thermal print heads, paper guides and paper path
- Improves print quality and legibility
- Protects your equipment - increases printer life, reliability and performance
- Works on all thermal printers
- Approved and recommended by major equipment manufacturers
- Use before inserting each roll of paper

Part Number		Price per ea.	L/50
29-0005-00	Happ Controls Thermal Printer Cleaning	.95	.84

HAPP CONTROLS GLASS CLEANER

- Best glass cleaner in the industry
- Fast & effective foam spray
- Non-streaking
- Non-ammoniated
- Safely used on glass, touchscreens, chrome, plastic, enamel & tile
- Large 20 oz. size
- 12 per case

Part Number		Price per ea.	L/12
29-1018-00	Happ Controls Glass Cleaner	3.15	2.60

HAPP CONTROLS ALL-PURPOSE CLEANER

- Completely cleans all typesof surfaces including:formica, playfields, wood, metal and glass
- Removes marks from pool balls, bowling pins and shuffle alley board
- 18 oz. aerosol can makes cleaning easy, simply spray on and wipe off
- 12 per case

Part Number		Price per ea.	L/12
29-1000-00	Happ Controls All-Purpose Cleaner	4.05	3.60

Visit Our Web Site:
happcontrols.com
for **NEW** Product Updates!!

HAPP CONTROLS PLEXI-CLEAN FOAMING ANTI-STATIC CLEANER AND POLISHER

- Great on touch screens, CRT & video screens
- Formulated for plastic, glass, plexiglass, chrome, plastic mirrors, Formica
- Cleans and polishes
- Anti-static, anti-fog
- Removes dirt, grease, nicotine, and fingerprints
- Will not streak, smear, or scratch
- Excellent on video security camera lenses
- Fast drying, reduces glare
- Safe on the ozone
- 19 oz. aerosol
- 12 per case

Part Number		Price per ea.	L/12
29-1175-10	Happ Controls Plexi-Clean Cleaner & Polisher	5.20	4.70

HAPP CONTROLS VANDAL MARK REMOVER

- Excellent for removing graffiti
- Removes spray paint, crayon, scuff marks and most inks
- Safe for use on brick, steel, brass, vinyl and most other surfaces
- Net weight 16 oz.
- 12 per case

Part Number		Price per ea.	L/12
29-1016-00	Happ Controls Vandal Mark Remover	6.15	5.55

DURA SHIELD CLEANER & POLISH

- Removes dust, grease, fingerprints, smoke film, etc.
- Safe to use on Plexiglass, Lexan, Lucite, polycarbonates, and other acrylic surfaces
- Excellent for TV's, VCR's, mirrors, stainless steel, windows, eye glasses, etc.
- Contains no harsh chemicals or abrasives
- Will not harm or dull factory protected finishes
- 16 oz spray bottle - 12 per case

Part Number		Price per ea.	L/12
29-1129-00	16 oz. Dura Shield Cleaner & Polish	4.70	4.20

TERGO ULTRA MICROFIBER CLEANING CLOTHS

Never Buy Cleaners And Chemicals Again – Just Wet, Wring, And Wipe

- An alternative way to clean with only ordinary tap water
- Great for slot machines, vending machines, video games, etc.
- Just dampen cloth with tap water only
- Wedge shaped Ultra Microfibers trap and remove dirt and dust particles
- Don't be fooled – this is ultra microfiber not microfiber – there is a difference
- Economical - eliminates the need for toxic cleaning chemicals, paper towels or sponges
- Lasts for years – can be machine washed over 600 times
- Picks up the smallest particles – proven to pick up bacteria
- Size: 12" x 12"
- Fiber Type: Ultra Microfiber
- Made in Sweden

TERGO ULTRA MICROFIBER GLASS CLEANING CLOTH

NEW

- Woven cloth designed for cleaning glass, plexi-glass, chrome, stainless steel and similar smooth surfaces
- Surfaces air-dry to a lint and streak- free shine leaving no residue
- Easily cleans away dirt, smoke film, fingerprints, and more
- Color: Blue
- Composition: 50% Polyester – 50% Polyamide

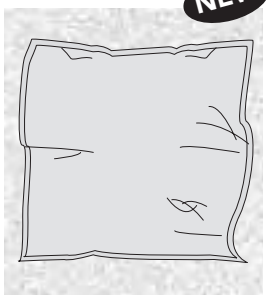

Part Number		Price per ea.
27-1428-00	Tergo Ultra Microfiber Glass Cleaning Cloth	6.25

TERGO ULTRA MICROFIBER MULTI-PURPOSE CLEANING CLOTH

NEW

- Knitted cloth with double sided loops for cleaning all types of surfaces
- Specially developed for removing heavy amounts of loose and ingrained dirt
- Use dry for dusting & polishing - static electricity and the fine fibers contribute to the attraction of dust
- Use wet for general cleaning, heavily soiled, greasy or outdoor areas
- Color: Pink
- Composition: 70% Polyester – 30% Polyamide

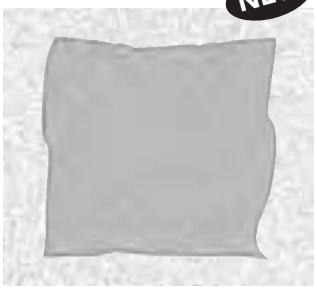

Part Number		Price per ea.
27-0062-00	Tergo Ultra Microfiber Multi-Purpose Cloth	6.25

INSTRUCTIONS FOR USE

The Glass cloth works best just slightly dampened with water. Either sprinkle water on the entire cloth or wet half the cloth. In most cases there is no need to wipe the surface dry after the cloth has been used, as evaporation enables surfaces to air-dry to a lint and streak-free shine. You can also spray water directly on the surface to be cleaned and wipe with a dry cloth.
(Note: if water marks appear, the cloth may have been too dirty or wet).

INSTRUCTIONS FOR CLEANING

To improve the lifespan of the Tergo cloths, it is necessary to wash them on a regular basis. For quick cleaning after use, simply hand wash in hot water, or use a very small amount of dish or laundry detergent. Do not use hand soap as it contains oil. Be sure to rinse well. Wash the cloths in the washing machine, when required, in hot water with your normal load. Either air or tumble-dry, up to 90 degrees. Do this when required or whenever the cloth looks soiled. Periodically boil the cloths in water for a few minutes on your stovetop. This disinfects and causes the fibers to swell releasing trapped grease and dirt. Tergo cloths can be machine washed over 600 times (lasting several years).

Important: The Tergo cloths should not be ironed, nor washed with conditioner/fabric softener or dryer softener sheets, as it would reduce the cloth's static electricity! (Boil the cloth to remove any residue, if fabric softener is used). Avoid washing in a load with terry towels, unless you put them in a mesh bag for delicates to prevent lint build up. The cloth should not be used with stainable materials such as paints and inks. It's best to use enviro-safe detergent if possible. DO NOT USE CHLORINE BLEACH or abrasive solutions for cleaning or washing. This will shorten the life span of the cloth.

QUIK STIK EPOXY

NEW

- Clear, fast curing epoxy adhesive
- Inview of it's short pott life, use is recommended when a single repair must be made and the mixed adhesives can be used within one or two minutes
- Cemented items can be safely handled within 8 to 12 minutes, with full hardness after several hours
- This cement is relatively thin in consistency and should be used to cement closely matching surfaces
- The glue line is usually invisible
- Pkg. of two 1/2 fl. oz. Tubes

Part Number		Price per ea.
29-0014-00	Quik Stik Epoxy	8.65

SUPER ADHESIVE

NEW

- Ethyl Cyanoacrylate Adhesive
- Forms strong, lasting bonds in seconds between either similar or dissimilar materials—metal, porcelain, plastic, glass, most rubbers, hardwoods, and other non-porous materials with smooth, close-fitting surfaces
- The bond resists softening at temperatures up to 320°F (160°C)
- Cures to a strength of 5000 psi
- Fills gaps to .003"
- Meets Mil. Spec. MIL-A-46050C Type I Class 2
- 1 fl. oz. [29 ml.] Bottle

Part Number		Price per ea.
29-0142-00	Super Adhesive	10.15

© HAPP CONTROLS

WYPALL® L40 WIPERS

NEW

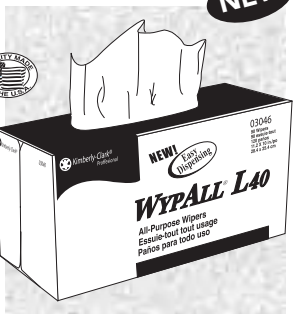

- Convenient, strong and reusable
- Unique Double Re-Crept base sheet technology to absorb liquids efficiently
- Low cost, high quality
- Virtually lint free
- Usage can be easily monitored with easy to use Pop-UpR Box
- Durable Pop-UpR box to protect from dirt and water
- Non-abrasive material, soft enough for use on face and hands
- Size: 11" W x 10.4" L
- Color: White
- 90 per box, 9 boxes per case

Part Number		Price per ea.	L/12
27-0105-00	Wypall® L40 Wipers	8.45	8.05

HEAVY-DUTY ECONOMIZER TOWELS

NEW

- Strong and absorbent
- Great for cleaning machines!
- Large Size: 9.8" x 16.4"
- Non-abrasive material
- 120 wipers per box
- 6 boxes per case
- Color: white

Part Number		Price per ea.	L/12
27-1388-00	Heavy-Duty EconoMizer Towels	9.25	8.15

SANI-TUFF WATERLESS WIPES

NEW

- Great for cleaning machines or hands
- Pre-moistened with cleanser reduces trips to the sink
- Dual textured wiper removes a wide range of soil such as oil, grease, grime, paint, etc.
- 90 wipers packed in a portable plastic bucket
- Pleasant citrus odor
- Large 12" x 12" wiper
- Sold per bucket, 6 buckets per case

Part Number		Price per ea.
27-1387-00	Sani-Tuff Waterless Wipes	24.95

MOIST TOWELETTES

- Quickly and easily cleans hands and face without soap, water or towel
- Great for clean-up after handling dirty coins
- Fresh lemon scent
- 5" x 6" towelette in a 2" x 2-1/4" foil lined packet
- Packed 1,000 per case
- Minimum order: 1 case

Part Number		Price per ea.	L/6	L/12
29-1187-00	Moist Towelettes	15.75	15.15	14.55

WILDCAT #125 PLAYFIELD CLEANER & POLISH

- Excellent for cleaning and shining pinball playfields and air hockey games. Note: Turn air hockey table on before applying Wildcat 125
- The best thing you can do for your playfield is to keep it clean
- New style bottle prevents evaporation
- 12 per case

Part Number		Price per ea.	L/12
25-1332-00	Cleaner & Polish (Quart Size)	16.95	16.40
25-1333-00	Cleaner & Polish (Pint Size)	10.90	9.75

WILDCAT PBC-15 POOL BALL CLEANER

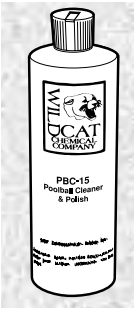

- Specially designed to clean and polish billiard balls
- WIll help retard the deterioration of cloth by keeping billiard balls clean
- Ideal for use by hand or machine
- Cleans and polishes billiard balls in 1 step
- 16 oz. bottle
- 12 per case

Part Number		Price per ea.	L/12
26-1263-00	PBC-15 Pool Ball Cleaner	9.75	9.65

WILDCAT TR-60 TAPE REMOVER

- Safely removes tape & adhesive from most surfaces
- 16 oz. squeeze bottle
- New style bottle prevents evaporation
- 12 per case

Part Number		Price per ea.	L/12
29-1004-00	TR-60 Tape Remover	10.05	9.65

WILDCAT RC-88 RUBBER RING CLEANER

- Designed to give longer life and better play to all rubber products
- Rubber looks and stays new longer
- Cleans, protects & restores
- 16 oz. can
- 12 per case

Part Number		Price per ea.	L/12
29-1005-00	RC-88 Rubber Ring Cleaner	13.20	12.60

WILDCAT CDC-100 COMPACT DISC CLEANER

- Insure maximum results with your compact discs
- Removes all fingerprints & foreign material
- Helps prevent static
- 16 oz. spray mist bottle
- New style bottle prevents evaporation
- 12 per case

Part Number		Price per ea.	L/12
29-1003-00	CDC-100 Compact Disc Cleaner	9.85	9.65

WILDCAT APC-30 FELT CLEANER

- Pool cloth cleaner; also great for Black-Jack, Craps & other games with felt cloth coverings
- Designed to lift chalk dust, light stains and soil from felt
- Gentle non-staining foam cleaner that lifts the soil to the surface and allows you to wipe the surface clean
- Heavy duty cleaner designed for dirty surfaces
- No rinsing needed
- Also cleans metal, plastic, wood & painted surfaces
- 18 oz. aerosol can
- 12 cans per case

Part Number		Price per ea.	L/12
29-1001-00	Wildcat APC-30 Felt Cleaner	10.90	9.90

WILDCAT TOUCHDOWN CLEANER

- Video screen cleaner safely removes dirt, dust, fingerprints & smudges
- Safe to use on touch screens
- Leaves a clean protective coating to repel future grime
- Helps prevent scratches
- 16 oz. bottle
- New style bottle prevents evaporation
- 12 per case

Part Number		Price per ea.	L/12
29-1030-00	Wildcat Touchdown Cleaner	9.70	9.40

WILDCAT SUPER CONTACT CLEANER

- Cleans all delicate instruments & equipment chassis
- Can be used on any surface, will not harm any plastic or synthetics
- High purity content
- Non-conductive
- Non-corrosive
- Fast evaporation
- Non-flammable
- 14 oz. aerosol can
- 12 per case

Part Number		Price per ea.	L/12
29-1002-00	Wildcat Super Contact Cleaner	17.30	15.85

OIL EATER HAND CLEANER

- Quickly removes grease, paint, adhesives and more
- 100% petroleum free
- Biodegradable
- With pumice, natural citrus, lanolin and aloe
- Use with or without water

Part Number		Price per ea.	Full Case
29-1157-00	15 oz. Oil Eater Hand Cleaner	6.15	5.10 (L/12)
29-1158-00	1 Gal. Oil Eater Hand Cleaner	27.80	26.65 (L/4)

SUN-GLO, SHUFFLEBOARD WAX

Listed In Order of Speed

SUPER-GLIDE SHUFFLEBOARD WAX

- Best shuffleboard wax anywhere
- Fastest wax from Sun-Glo®
- Pure silicone ball bearings
- Shaker top allows even dispensing
- 1 lb. Cans
- 24 per case

TOURNAMENT GOLD SHUFFLEBOARD WAX

- Approved by champions
- Extremely fast, but still allows intensive control
- High-Quality wax created especially for tournament play
- Not for dance floors
- Easy pour top allows even dispensing
- Second fastest Sun-Glo® wax
- 1 lb. Cans
- 24 per case

BROWN BEAR SHUFFLEBOARD WAX

- Another best seller of Sun-Glo® products
- Third fast wax from Sun-Glo®
- Perfect for a fast game with solid control
- Shaker top allows even dispensing
- 1 lb. Cans
- 12 per case

5-STAR SHUFFLEBOARD WAX

- A traditional favorite of shuffleboard players
- Slower formula allows more control
- Shaker top allows even dispensing
- Fifth fastest wax from Sun-Glo®
- 1 lb. can
- 12 per case

BOWLER SHUFFLE ALLEY WAX

- Provides a waxed surface without high speed
- Designed for older bowling shuffle alley games
- Shaker top allows even dispensing
- Contains no silicone balls
- Slowest wax in the line-up
- 1 lb. Cans
- 24 per case

MASTER GLAZE LIQUID WAX

- First step to revitalize the shuffleboard
- Creamy rich liquid polishes to a high glaze
- Apply first, then maintain with other Sun-Glo® waxes
- Quart size cans
- 12 per case

SILICONE SPRAY

- Specifically designed for Shuffleboard games
- Fast drying, leaves no greasy or oily film
- Simply spray a light film on a clean surface, then reapply powder for a fast shuffleboard
- Eliminates tracking and saves powder
- 12 oz. net wt.
- 12 per case

Part Number		Price per ea.	Full Case
49-0469-00	Super-Glide Shuffleboard Wax, 24 per case	4.70	4.10
29-0269-00	Tournament Gold Shuffleboard Wax, 24 per case	5.10	4.60
49-0482-00	Brown Bear Shuffleboard Wax, 12 per case	5.45	4.95
29-1020-00	5-Star Shuffleboard Wax, 12 per case	4.05	3.75
29-1057-00	Shuffle Alley and Bowler Wax, 24 per case	4.20	3.95
29-1034-00	Master Glaze Liquid Wax, 12 per case	12.05	10.90
29-1089-00	Silicone Spray, 12 per case	8.55	8.15

© HAPP CONTROLS

PLAYFIELD CLEANERS & POLISHES

Novus Cleaner & Polish

- Cleans and protects playfield surface for long life
- Special formula removes light to heavy scratches in playfields and plexiglass
- Recommended by major pinball manufacturers

Mills Pinball Playfield Wax & Cleaner

- Excellent one step non-abrasive playfield wax and cleaner
- Great cleaner for rubber rings
- 16 oz. squeeze btl.,12 per case

Wildcat KC-22 Krystal Clear Mylar Cleaner

- Non-petroleum based cleaner designed to be specifically used on mylar and other surfaces to achieve a clean, durable protective shine
- Will extend life of mylar playfields
- New style bottle prevents evaporation
- 16 oz. spray mist bottle
- 12 per case

Wildcat #125 Playfield Cleaner & Polish

- Excellent in cleaning pinball playfields
- Excellent for removing and cleaning up wax buildup in vending machines "price tab holders"
- New style bottle prevents evaporation
- 12 per case

Gemini CP-100 Playfield Cleaner & Polish

- Excellent for playfields, pool balls, rubber rings, etc.

NOVUS CLEANER & POLISH		Price per ea.	Price per case
25-1328-00	Novus #1, 8 oz. bottle, 24 per case	4.05	3.85
25-1329-00	Novus #2, 8 oz. bottle, 24 per case	5.20	5.00
25-1334-00	Novus #3, 8 oz. bottle, 24 per case	7.25	6.45
25-1330-00	Novus #1, 64 oz. bottle, 12 per case	15.75	14.55
25-1331-00	Novus #2, 64 oz. bottle, 12 per case	26.65	25.35

MILLS PINBALL PLAYFIELD WAX & CLEANER		Price per ea.	L/12
29-1040-00	Mills Pinball Playfield Wax & Cleaner	8.45	7.80

WILDCAT KC-22 KRYSTAL CLEAR CLEANER		Price per ea.	L/12
29-1052-00	Wildcat KC-22 Krystal Clear Mylar Cleaner	10.85	10.20

WILDCAT #125 PLAYFIELD CLEANER & POLISH		Price per ea.	L/12
25-1332-00	Cleaner & Polish (Quart Size)	16.95	16.40
25-1333-00	Cleaner & Polish (Pint Size)	10.90	9.75

GEMINI CP-100 PLAYFIELD CLEANER & POLISH		Price per ea.	Price Full case
29-1095-00	Cleaner & Polish (16 oz.), case/12	9.65	9.10
29-1051-00	Cleaner & Polish (8 oz.), case/24	4.30	4.05

HAPP CONTROLS FOAMING COOLING COIL CLEANER

- Adds life and efficiency to the refrigeration compressor
- Cleans away grease and dirt simply by spraying on
- Spray the coils completely from the air intake side, the dirt and grime is pulled through to the filter by the forced air
- Pleasant lemon scent
- Convenient 18 oz. aerosol
- 12 per case

Part Number		Price per ea.	L/12
29-1014-00	Happ Controls Foaming Cooling Coil Cleaner	4.10	3.85

HAPP CONTROLS STAINLESS STEEL CLEANER

- Cleans, polishes and brightens stainless steel
- Polishes to a non-greasy invisible coating, resisting future dirt and fingerprints
- Almond scented
- 18 oz. spray can
- 12 per case

Part Number		Price per ea.	L/12
29-1039-00	Happ Controls Stainless Steel Cleaner	4.80	4.20

HAPP CONTROLS COMMODITY TROUGH CLEANER

- Cuts the work out of cleaning those hard to clean coffee stains found in commodity troughs, brew cylinders and hoses in coffee machines
- Also works to clean caked on creamer and hot chocolate
- Keeps coffee machines clean for better tasting coffee
- 100% Non-Toxic, leaves NO after-taste
- Easy to use; Simply spray or pour, wipe with paper towel and rinse with hot water
- Comes available with 24 oz. Convenient Ergo spray bottle with Continuous Twist Sprayer or Economy gallon size

Part Number		Price per ea.	L/12
29-1169-00	24 oz. Spray Bottle	9.70	9.25
29-1169-00G	1 Gallon Size	21.90	20.80

Visit Our Web Site:
happcontrols.com
for NEW Product Updates!!

MINI DUST GUN 100 COMPRESSED AIR

- A powerful blast of air!
- Ideal size for tool boxes – only 4.25" high x 1.5" diameter
- Instantly removes microscopic dust and lint
- Completey dry; leaves no residue
- Non-toxic, odor free
- 100% ozone safe
- Non-flammable – contains no ether
- Extension nozzle included
- 2.5 oz.

Part Number		Price per ea.
29-0007-00	Mini Dust Gun 100 Compressed Air	5.15

E-Z VEND WAX & OIL REMOVER

- Easily removes wax and oil buildup on snack machine shelves and plastic shelf fronts
- Allows snacks to vend easily
- Cleans and polishes
- Reduces wear and tear on vend motors
- Convenient 8 oz. bottle allows easy strorage in tool box

Part Number		Price per ea.	L/12
29-1183-00	E-Z Vend Wax & Oil Remover, 8 oz.	10.30	9.70

URN CLEANER

- Eliminates stale odors and bad taste from coffee
- Great for metal and glass fixtures. (Not recommended for aluminum)
- Easy to use 1 oz. package
- Minimum order 10

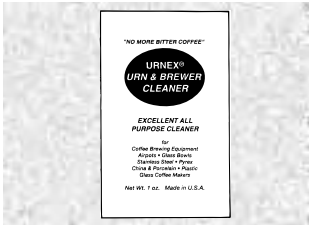

Part Number		Price per ea.	L/50
29-1160-00	Coffee Urn Cleaner	.38	.33

PLASTIC SPRAY BOTTLE

- Trigger Release
- 24 oz. size

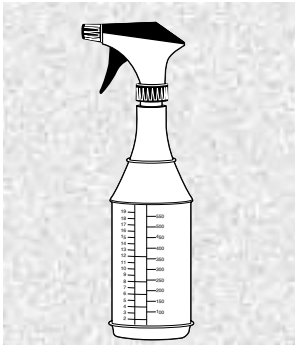

Part Number		Price per ea.
29-1122-00	Plastic Spray Bottle	4.05

HAPP CONTROLS ENVIRO-DUSTER

- A powerful blast of compressed air
- Use on electronics, optics and more
- Pinpoint blasting spray
- Non-toxic and odor free
- Non-flammable
- High purity – no residue
- Moisture free
- Non-ozone depleting
- 12 oz. can with built-in continuously variable trigger valve and extension nozzle
- 12 per case

Part Number		Price per ea.	L/12
29-1900-00	Happ Controls Enviro-Duster	7.10	6.40

SCALE CLEAN BY EVERPURE

- Used in coffee urn on all types of vending machines
- All natural, biodegradable, non-toxic/corrosive and environmentally safe
- Delimes
- Safe, organic formula eliminates scale without foul fumes

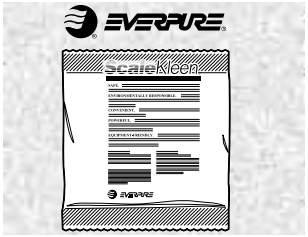

Part Number		Price per ea.	Price per case.
29-1049-00	1.75 oz Package, 12 per case	2.20	2.10
29-1061-00	2.2 lb. Bag, 4 per case	17.85	16.70

SQUEAK'N CLEAN COFFEE POT CLEANER

- Keeps coffee machines, pots and brew baskets clean for better tasting coffee
- 100% Non-Toxic
- Prevents coffee oil build-up odors and stains
- Contains no acids, perfumes or abrasives
- Leaves No after-taste
- Requires no boiling, no soaking; simply apply 3 or 4 squirts to area to be cleaned,apply hot water, bathe and rinse
- 12 oz. bottle

Part Number		Price per ea.	L/12
29-1165-00	Squeak'n Clean Coffee Pot Cleaner	5.20	4.70

NICKEL SAFE ICE MACHINE CLEANER

- Safely removes scale deposits from ice machines
- Safe on nickel plated or tin evaporators
- 16 fl. oz., 24 per case

Part Number		Price per ea.	L/12
29-1019-00	Nickel Safe Ice Machine Cleaner	10.95	9.70

© HAPP CONTROLS

TECHSPRAY FLUX REMOVER G3™

- Designed specifically for removing R, RA, RMA and SA type flux residues after high temperature reflow.
- Can also be used as an all-purpose cleaner to remove light oils, silicones, waxes, greases and other similar contaminants
- Formulated to be a direct replacement for all defluxers containing HCFC-141b
- Non-ozone depleting
- Non-flammable
- Safe on most plastics
- Zero residue
- Rapid evaporation
- 16 oz. aerosol
- Tech Spray No. 1631-16S

Part Number		Price per ea.	L/12
29-0207-00	Techspray Flux Remover G3™	15.80	15.30

TECHSPRAY TECHCLEAN® SMT BLUE WIPES

- Specifically designed for general maintenance
- Lint free - particle free
- Extra absorbent to capture liquids
- Cellulose/polyester wipes with extra low particulate and chemical extractables
- Sold in packages of 300

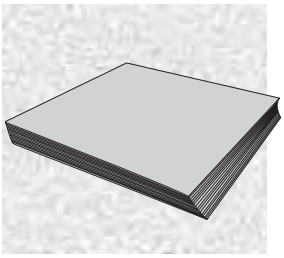

Part Number		Price per ea.	L/12
27-0038-00	Techspray TechClean SMT Blue Wipes	29.25	27.80

TECHSPRAY BLUE SHOWER G3™ CLEANER/DEGREASER

- Effective in cleaning electronic equipment, machinery, metal parts and other general cleaning applications
- Innovative blend designed for precision cleaning of polar and non-polar soils including hand and solder oils, greases, silicones, fluxes, etc.
- New patented technology is direct replacement for all cleaner/degreasers containing HCFC-141b
- Non-ozone depleting
- Non-flammable
- Safe on most plastics
- Zero residue
- Rapid evaporation
- 16 oz. aerosol
- Tech Spray No. 1630-16S

Part Number		Price per ea.	L/12
29-0209-00	Techspray Blue Shower G3™ Cleaner / Degreaser	16.50	15.80

TECHSPRAY ENVI-RO-TECH DUSTER

- Exceptionally pure inert dusting gas
- Moisture free inert gas removes particles without the use of harmful solvents
- Removes microscopic contaminants, lint, dust, metallic oxide deposits and other soils
- Formulated with HFC-134a which has a zero ozone depletion factor
- Non-Flammable
- Odorless
- Zero Residue
- 10 ounce and 15 ounce aerosol available
- 12 per case

Part Number		Price per ea.	L/12
29-0046-00	ENVI-RO-TECH Duster 10 oz.	6.10	5.60
29-0047-00	ENVI-RO-TECH Duster 15 oz.	8.45	7.95

TECHSPRAY CONTACT CLEANER G3™

- Precision blend designed for removing oils, greases, silicones, dirt and other grime from all types of switches, relays, contact pads and other electrical connections
- New patented technology is direct replacement for all contact cleaners containing HCFC-141b
- Non-ozone depleting
- Non-flammable
- Safe on most plastics
- Zero residue
- Rapid evaporation
- 16 oz. aerosol
- Tech Spray No. 1632-16S

Part Number		Price per ea.	L/12
29-0208-00	Techspray Contact Cleaner G3™	16.50	15.80

TECHSPRAY ZERO CHARGE® SCREEN & KEYBOARD CLEANER

- Eliminates static charge from sensitive surfaces and provides long-term static protection
- For optical clarity and distortion free reading
- Removes hand oils, ink marks, dust, fingerprints, nicotine, syrup, carbon and other soils
- Safe on plastic, ceramics, glass, metal and elastomers
- Non-streaking
- Non-ozone depleting
- 50 pre-saturated packets per box; 10 boxes per case
- Sold in boxes of 50

Part Number		Price per ea.	L/12
29-0059-00	Techspray Zero Charge® Screen and Keyboard Cleaner	18.35	17.80

ENVI-RO-TECH FREEZER

- HFC-134a based rapidly evaporating liquid that chills to -620F
- Used as a troubleshooting aid for electronic components
- Detects cold solder joints, printed circuit board cracks and oxidized junctions
- Will not harm the ozone
- Net wt. 10 oz., 12 per case

Part Number		Price per ea.	L/12
29-1056-00	Envi-Ro-Tech Freezer	6.60	6.00

TECHSPRAY TECHCLEAN TWILLWIPE

- Designed for wiping abrasive surfaces
- Tightly woven 100% cotton enables it to be used in static sensitive areas
- Low triboelectric generation
- Non-existent chemical extractables
- Pure cleaning
- Low linting
- 6" X 6" flat wipes
- Sold per bag of 100 wipes

Part Number		Price per ea.
29-0211-00	Techspray Techclean Twillwipe	17.00

TECHSPRAY LABEL & ADHESIVE REMOVER

- Specially designed hydrocarbon cleaner that safely removes labels and adhesive gums from equipment
- Effectively removes gummy residues, labels, stickers, ink marks, beverage spills and other contaminants
- Penetrates rapidly
- Non-ozone depleting
- Safe on most plastics
- Natural solvent
- High flash point
- Pleasant odor
- 2 ounce bottle
- Packed 24 per case

Part Number		Price per ea.	L/24
29-0032-00	TechSpray Label & Adhesive Remover	6.20	6.05

TECHSPRAY TECH HOLD®

- General Purpose, single component, cyanoacrylate adhesive
- High strength, fast bonding and high impact holding
- Fast acting and durable bonding
- Meets or exceeds MIL-A-46050C Type II, Class 2
- 3 grams

Part Number		Price per ea.
29-0195-00	Techspray Tech Hold®	2.45

TECHSPRAY BLUE SHOWER II

- General purpose cleaner and degreaser
- Non-flammable and safe on most plastics
- For precision cleaning of polar and non-polar soils including hand soils, solder soils, greases, silicone, fluxes and similar soils
- Excellent for tape head cleaning
- Evaporates rapidly
- Zero residue
- Non-corrosive
- Low ozone depletion
- Available in 8 oz or 18 oz aerosol

Part Number		Price per ea.	L/12
29-0210-00	Blue Shower II, 8 ounce	12.90	12.20
29-0044-00	Blue Shower II, 18 ounce	23.88	23.25

TECHSPRAY PREP PADS

- Pre-saturated isopropyl alcohol packets
- 99.6% pure anhydrous isopropanol for general purpose cleaning
- Excellent for tape head cleaning, removal of fluxes, light oils, polar soils and white mineral residue
- Can be used as a thinner for most fluxes
- Non-ozone depleting
- Safe on plastics
- Zero residue
- Non-corrosive
- 50 pre-saturated packets per box; 10 boxes per case
- Sold in boxes of 50

Part Number		Price per ea.
29-0028-00	Techspray Prep Pads	17.60

TECHSPRAY BRUSH ATTACHMENT KIT

- Designed for precise control of cleaning applications
- Allows convenient, one-handed cleaning
- The brush attachment is simply installed on top of the aerosol can
- The valve allows complete control of the amount of solvent applied
- 3 brushes are included along with the brush attachment
- The medium horse hair brush (1992) is recommended for most electronic cleaning applications
- The long horse hair brush (1993) is designed for more sensitive areas
- The brass brush (1994) is for aggressive cleaning of stubborn soils and precious metals

Part Number		Price per ea.
92-0982-00	Techspray Brush Attachment Kit	17.84

© HAPP CONTROLS

SIMPLE GREEN CLEANER

- Great all-purpose cleaner
- Non-toxic, biodegradable formula removes grease, grime and dirt on parts
- Safe to use cleaning hands
- Water-based concentrate can be used full strength for tough jobs, or dilute for easier jobs
- 1 gallon size, 6 per case

Part Number		Price per ea.	L/6
29-1037-00	Simple Green Cleaner	26.55	24.10

FLUX REMOVER AND CLEANER

- Removes all types of organic flux
- Pinpoint applicator supplied
- Convenient, fast and ready to use
- Non-flammable
- 16 oz. can
- 12 cans per case

Part Number		Price per ea.	L/12
29-1134-00	Flux Remover and Cleaner	8.70	8.30

DOUBLE HEADED CLEANING SWABS

- Cotton tips swabs for general cleaning with alcohol, Freon TF, 1,1,1 Trichloroethene, etc.
- 6" long

Part Number		Price per bag
92-0028-00	Double Headed Cleaning Swabs (bag of 50)	4.90
92-0028-10	Double Headed Cleaning Swabs (bag of 1000)	54.60

POLY & COTTON LINT FREE SWABS

- A special absorbent polyurethane swab
- Has a fine texture that is gentle enough to clean delicate surfaces
- Reusable if used with solvents such as TF solvent, alcohol, etc.
- Sold in packs of 30
- 6 packs per box
- 6" wooden handle

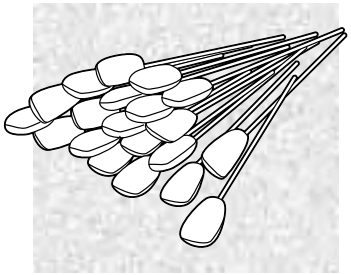

Part Number		Price per pack
92-0023-00	Poly & Cotton Lint Free Swabs	9.35

BRASS WIRE BRUSH

- Wooden handle with brass bristles
- 10" long

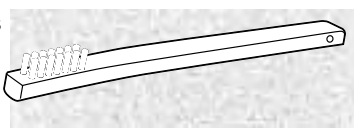

Part Number		Price per ea.
89-0220-00	Brass Wire Brush	4.05

ISOPROPYL ALCOHOL

- Extremely pure alcohol
- Frequently recommended by manufacturers of tape drives
- Leaves no residue
- Non-aerosol
- Screw-top can
- 16 oz. can
- 12 cans per case

Part Number		Price per ea.	L/12
29-1125-00	Isopropyl Alcohol	10.40	9.60

SCOT'S CITRUS CLEAN REMOVER

- Dissolves tape, tar, gum, permanent marker, glue, grease and more
- Removes chewing gum, price stickers, lipstick, tape residue, crayon, oil, and more
- Water-based non-oily formula contains no petroleum distillates
- Great for use on video games, vending machines and slot machines
- Clean smelling citrus scent
- 8 fl. oz. bottle
- Packed 6 per case

Part Number		Price per ea.
29-0237-00	Scot's Citrus Clean Remover	3.85

TECHSPRAY TECHNICAL CLEANING BRUSH

NEW

- 4-1/2" plated steel handle
- 1/4" and 3/16" horse hair bristles
- Ref. No. 2032-1

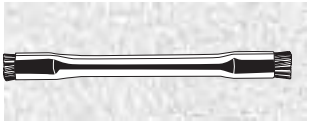

Part Number		Price per ea.
89-0009-00	TechSpray Technical Cleaning Brush	6.10

COFFEE POT BRUSH

- Curved tip
- 10-1/2" overall length
- 1-3/8" Diameter
- Laquered wood handle
- Polypropelene bristles

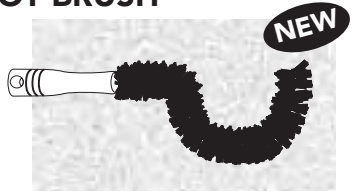

Part Number		Price per ea.
89-0227-00	Coffee Pot Brush	4.40

CORN WHISK BROOM

- 10-1/2" overall length

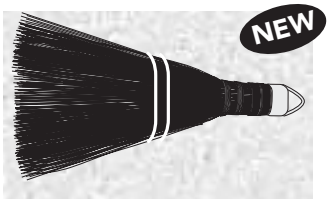

Part Number		Price per ea.
89-0228-00	Corn Whisk Broom	6.30

ACID BRUSH

- 6" long
- 4 per card
- Sold each or by the card

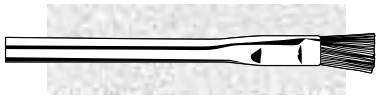

Part Number		Price per ea.
89-0224-00	Acid Brush	.95

PARTS CLEANING BRUSH

- Great for washing parts
- Wooden handle
- Nylon bristle
- 10" long

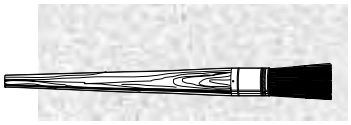

Part Number		Price per ea.
89-0221-00	Parts Cleaning Brush	4.95

CONDENSOR FIN WHISK BRUSH

NEW

- Clean the dirty fins in back of your machines

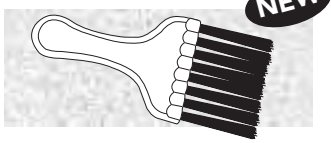

Part Number		Price per ea.
27-2026-00	Condensor Fin Whisk Brush	1.35

BRUSH

- Available in 1" width only

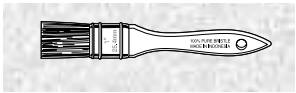

Part Number		Price per ea.
89-0223-00	1" Brush	1.05

TUFOIL® LUBIT 8®

- Light weight, pen size oiler dispenses 1 drop of oil at a time, when and where you want it
- Pocket clip makes it easy to carry all the time
- 1/4 fl. oz.

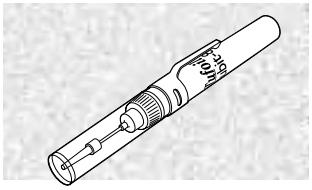

Part Number		Price per ea.	L/12
29-1036-00	Tufoil Lubit 8®	4.30	3.75

ZOOM SPOUT OILER

- The finest all-purpose turbine oil uniquely packaged to reach those hard to get to areas
- Telescoping spout extends out of the bottle up to 14" long
- A must for every toolbox
- Withstands high temperatures
- Net wt. 4 fl. oz., 72 per case

Part Number		Price per ea.	L/12
29-1033-10	Zoom Spout Oiler	1.60	1.40

LUBRIPLATE

- This paste-like lubricant works great on gears, motors, engines
- Provides protection against friction, wear, heat, rust & corrosion

Part Number		Price per ea.	L/6
29-1023-00	Lubriplate 14 oz. can	8.55	7.95
29-1059-00	Lubriplate 1-3/4 oz. tube	3.30	3.15

WD-40

- Lubricates – contains no additives that attract dust and dirt
- Cleans – gets under dirt, oil, grease & grime to clean the surface
- Displaces moisture and is a non-conductor of electricity
- Quickly eliminates moisture induced short circuits
- Penetrates to loosen rust from metal
- Protects with corrosive resistant ingredients

Part Number		Price per ea.	Case
29-1041-00	WD-40, 2 oz. Aerosol can, 24 per case	3.15	2.70
29-1042-00	WD-40, 11 oz. Aerosol can, 12 per case	5.60	5.05
29-1043-00	WD-40, 16 oz. "Industrial Size" Aerosol can,12 per case	7.15	6.75
29-0203-00	WD-40 Gallon	25.50	23.95

SILICONE SPRAY

- Clean, dry, food grade silicone spray, lubricates without spotting or odor
- Inhibits rust, repels water
- FDA Approved
- Net wt. 20 oz., 12 per case

Part Number		Price per ea.	L/12
29-1032-00	Silicone Spray	5.20	4.65

MR. ZIP® EXTRA FINE GRAPHITE

- Mr. Zip® Extra Fine Graphite
- Dry powder graphite is great for lubricating all surfaces including wood, metal, plastic & rubber
- .21 oz. tube (6 g)
- 12 per case

Part Number		Price per ea.	L/12
29-1010-00	Mr. Zip® Extra Fine Graphite	3.75	3.15

BUTANE GAS REFILL

- Premium grade butane
- For use with Portasol soldering tool and similar tools
- Contains no contaminants
- Will not clog valves or deactivate catalytic conversion materials
- Net Wt. 3 fl.oz.
- Can be shipped via ground only

Part Number		Price per ea.
29-1055-00	Butane Gas Refill	7.10

© HAPP CONTROLS

3M™ SPRAY ADHESIVE

3M SPRAY ADHESIVE #74
- Quick tack in bonding most materials: cloth, wood, plastics and metal
- 23.25 fl. oz.

3M SPRAY ADHESIVE #76
- Longer tack time – bonding in 10 minutes for a single sprayed surface, 1 hour for two coated surfaces
- Adjustable spray allows varied widths to be sprayed, eliminates spraying of too much adhesive
- 23.5 fluid oz.

3M SPRAY ADHESIVE #77
- Will initially "grab" the material, but allows time to adjust before permanent bonding
- 23 fluid oz.

3M SPRAY ADHESIVE #90
- Exceptionally strong contact adhesive
- One minute dry time
- Adjustable spray tip allows varied widths to be sprayed
- Bonds decorative laminates wood, metal, plastics and many other materials
- 16.6 fluid oz.

NOTE: #74, #76, #77 cannot be sold in the state of California

Part Number		Price per ea.	L/12
29-1006-00	3M Spray Adhesive #74, 12 per case	12.65	12.10
29-1007-00	3M Spray Adhesive #76, 12 per case	11.55	11.00
29-1008-00	3M Spray Adhesive #77, 12 per case	10.75	9.85
29-1069-00	3M Spray Adhesive #90, 12 per case	17.10	14.70

3M SCOTCHGRIP 10 CONTACT ADHESIVE

- Great solvent based adhesive
- Bonds to a wide variety of materials including many metals
- Fast drying - typically in 5 to 10 minutes
- Moisture resistant
- Sold in one quart cans (32 oz.)

Note: This is considered "hazardous material". An additional $20.00 HazMat charge will be added per box. Order 1 can, $20.00 will be added. Order 1 case, $20.00 will be added. Order 2 cases, $40.00 will be added.

Part Number		Price per ea.
29-1068-00	3M Scotchgrip 10 Contact Adhesive	19.60
89-0223-00	1" Brush	1.05

GOO GONE® PRO-POWER SPRAY GEL

- Stick with a winner that sticks
- Now in a spray gel that sticks where you spray
- New drip-free formula eliminates the mess
- Say "Goo-Bye" to sticky, gummy, greasy, gooey problems
- Safe to use on almost any surface
- Safe to breathe, natural orange scent
- Quickly eliminates: paint, adhesive, price stickers, decals, tape residue, chewing gum, oil and printer's ink
- Works great on vertical surfaces
- 14 oz. spray bottle, 12 per case

Part Number		Price per ea.	L/12
29-0002-00	Goo Gone Pro Power Spray Gel	9.20	8.15

HAPP CONTROLS SPRAY ADHESIVE

- Pressure sensitive adhesive
- Strong, instant tack
- 20 oz. can
- 12 per case

NOTE: Cannot be sold in the state of California

Part Number		Price per ea.	L/12
29-1017-00	Happ Controls Spray Adhesive	7.30	6.15

CUE TIP CEMENT

- Great for attaching leather tips to cue sticks
- Will not harm leather tip
- 2 oz. tube

Part Number		Price per ea.	L/12
26-1107-00	Tweeten Cue Tip Cement	3.15	2.95

BARGE CEMENT

- Great for recovering of pool tables
- Bonds clean, dry surfaces
- Bonds many times stronger than the strength of items being glued

Part Number		Price per ea.	L/12
29-1024-00	Barge Cement, 2 oz. Tube	4.90	3.75

ECLECTIC E-6000™ ADHESIVE SEALANT

- Silicone type texture that dispenses like caulk
- Aggressively grabs surface and holds; will stretch, but won't let go
- Great for sealing doors of machines
- Adheres to cement, metal, glass, tile, plastic, rubber, leather, wood & vinyl
- Waterproof/Non-flammable
- Net weight 3.7 fl. oz. tube
- 12 per case

Part Number		Price per ea.	L/12
29-1021-16	Eclectic E-6000 Adhesive – Black	7.30	6.15
29-1021-18	Eclectic E-6000 Adhesive – Clear	7.30	6.15

ORIGINAL GOO GONE

- Nothing removes sticky, gummy, gooey, greasy spots and stains better
- It really works – anywhere, anytime, on practically anything!
- Removes Stickers, grease, oil, gum, tar, crayon, tape, lipstick, etc.
- Safe to use on virtually any surface – clothing, carpets, upholstery, vinyl, metal, wood, tile, you-name-it
- Pleasant citrus odor
- 8 oz. liquid
- 12 per case

Part Number		Price per ea.	L/12
29-1178-00	Original Goo Gone	6.45	6.35

INSTANT KRAZY GLUE

- No mixing, no mess
- One drop application
- Ideal for plastic, metal, rubber, glass and ceramic
- Net wt. .07 oz. (2 g)

Part Number		Price per ea.	L/12
29-1044-00	Instant Krazy Glue - All Purpose	2.10	1.90

KRAZY GLUE WOOD FORMULA

- Specially formulated to bond wood
- One drop applicator
- Strong long lasting bond
- Convenient leakproof and airtight case
- Net Wt. .07 oz. (2g)

Part Number		Price per ea.	L/12
29-1161-00	Krazy Glue Wood Formula	2.10	1.90

KRAZY GLUE WITH PRECISION APPLICATOR

- No-clog applicator
- Easy seal hanger cap
- Advanced formula bonds faster than many ordinary super glues
- Larger 5 gram size
- Best for plastic, wood, ceramic, rubber, metal and glass
- Net Wt. 0.18 oz. (5g)

Part Number		Price per ea.	L/12
29-1185-00	Krazy Glue with Precision Applicator	3.35	3.05

KRAZY GLUE GEL

- Best for vertical applications
- Glues up, down and sideways
- Allows repositioning
- No-clog applicator
- Bonds porous surfaces
- Larger 4 gram size
- Best for Plastic, leather, wood, ceramic, rubber, metal and pottery
- Net Wt. 0.14 oz. (4g)

Part Number		Price per ea.	L/12
29-1159-00	Krazy Glue Gel	3.35	3.05

LOCTITE 242® THREADLOCKER

- Locks threaded fasteners against vibration loosening
- Prevents leaks and rusting of threads
- Parts can be disassembled with hand tools
- Ideal for fasteners 1/4" to 3/4" (6 to 20 mm) in size
- O.E.M. specified as 242® Blue
- Net 0.08 fl. oz.

LOCTITE®

Part Number		Price per ea.
29-1146-00	Loctite 242® Threadlocker	4.90

SAFETY SOLVENT DEGREASER

- Non-flammable solvent degreaser
- Removes dirt, grease and grime from motor parts, bearings, tools, etc.
- Size 16 oz. net wt.
- Aerosol
- 12 cans per case

Part Number		Price per ea.	L/12
29-1112-00	Safety Solvent Degreaser	9.40	8.55

DEVCON 5-MINUTE EPOXY

- Ideal for making quick repairs to metals, ceramics, wood and concrete
- Forms a clear strong bond in just 5 minutes and cures to full strength in less than one hour at room temperature
- 1 oz. size, 24 per case

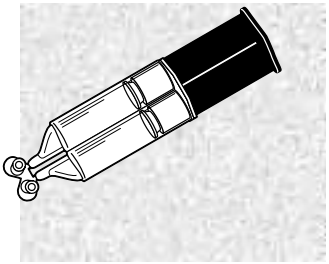

Part Number		Price per ea.	L/24
29-1054-00	Devcon 5-Minute Epoxy	6.75	6.35

OIL EATER CLEANER/DEGREASER

- Low cost, ultra-concentrated cleaner/degreaser removes grease from machines, engines, tools, concrete, etc.
- Excellent for use on scuff marks, carpet cleaning, floor wax remover, counter tops
- Non-caustic, biodegradable
- No V.O.C.'s or harmful fumes
- No chlorinated solvents
- USDA authorized
- Can be heated for enhanced cleaning
- Non flammable

Part Number		Price per ea.	Price per case
29-1155-00	32 oz. Oil Eater with Trigger Spray	7.30	6.75 (L/12)
29-1156-00	1 Gal. Oil Eater Cleaner/Degreaser	21.25	20.00 (L/4)

© HAPP CONTROLS

BAD AIR SPONGE

NEW

Not an Air Freshener but A True Odor Neutralizer!

- Great for coffee machines - eliminates foul odor from old coffee grounds
- Neutralizes odors such as cigarette and cigar smoke, cooking, garbage, decay, solvents, mildew, gasoline, etc.
- Used in areas such as vending machines, food prep areas, restrooms, casinos, hotel guestrooms, bars, warehouses, offices, storage areas, etc.
- USDA approved for food applications
- Works 3 ways - adsorbs, entraps and neutralizes odors
- Based on a patented formula the Bad Air Sponge is a solid, paste-gel containing activated charcoal
- Easy to use - just remove the container lid
- A passive, safe product that simply evaporates when opened
- Non-toxic, non-flammable and environmentally safe
- 1 lb. canister
- Made in USA

Part Number		Price per ea.	L/24
27-1450-00	Bad Air Sponge	13.25	12.20

EDWARD CANISTER VACUUM

- Used by leading Family Entertainment Centers
- Quiet operation - 58 dB. Allows you to vacuum during business hours
- Superior suction and quality
- No beater bar or belts to wear out
- Dual filtering action with .5 micron filter @ 99.5% efficiency for outstanding dust control
- Lightweight - 17 lbs., 4.5 gallon capacity
- Stainless steel hose attachments
- 30 ft. enclosed power cord with manual winder
- 2 year warranty on motor, 10 year warranty on canister body
- Structural foam canister is long wearing, dent and corrosion proof

Part Number		Price per ea.
92-0291-00	Edward Canister Vacuum	396.75
92-0291-10	Replacement bags for Edward Canister Vacuum 10 Bags Per Pack	19.35

Visit Our Web Site:
happcontrols.com
for **NEW** Product Updates!!

HAPP CONTROLS SECURE PRODUCTS

HAPP CONTROLS

Offers a wide range of security products!

Call 888-BUY-HAPP To Order

© HAPP CONTROLS

HAPP CONTROLS LOCK DEPARTMENT

Happ Controls now has it's own lock assembly department. We offer fast turn around on 7-pin tumbler locks. Most custom lock orders can be shipped within 48 hours. Happ locks can be keyed to your existing 7-pin tumbler key, if we receive a sample key with your order. Our 7-pin tumbler locks offer high security at a reasonable price. For your added protection, any code issued by Happ Controls can be restricted in our computer system exclusively to your company.

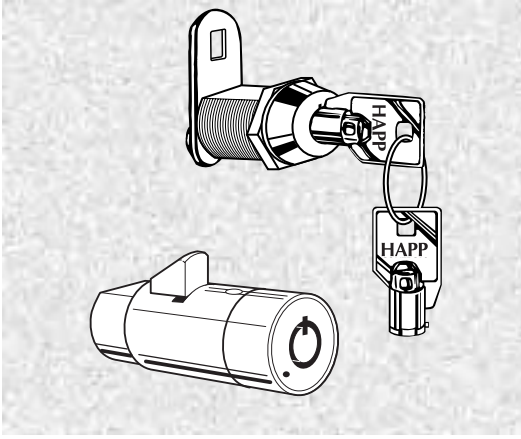

HAPP CONTROLS ALSO OFFERS: ABA ▪ ACE ▪ COMPX NATIONAL ▪ DUO ▪ FLEX-ACE ▪ FORT ▪ GEMATIC ▪ MEDECO ▪ VAN

FAST TURN AROUND

CUSTOM ORDERS

CUSTOM LOCKS

ECONOMICAL PRICING

HIGH SECURITY

LOCKS

ECONOMY SINGLE BITTED LOCKS

- Used on most types of coin-operated equipment
- Economical single-bitted, 5-disc, tumbler lock
- Great for O.E.M. applications or as a general replacement lock
- Strong, dependable die-cast construction
- 90 degree turn that allows the key to be removed only in the locked position
- Keyed different locks come with 2 keys per lock and a 1-1/4" straight cam
- Keyed alike locks come with 1 key per lock and a 1-1/4" straight cam

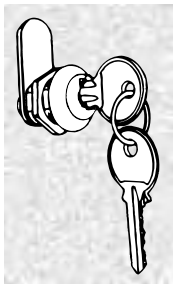

Part Number	Length	Keying	Key #	Price per ea.	L/50	L/100
30-2224-XXX	5/8"	Keyed Alike	New #	2.70	2.60	2.50
30-2224-KD	5/8"	Keyed Different	–	2.75	2.65	2.55
30-2224-631	5/8"	House Keyed Alike	631	2.70	2.60	2.50
30-2224-641	5/8"	House Keyed Alike	641	2.70	2.60	2.50
30-2224-644	5/8"	House Keyed Alike	644	2.70	2.60	2.50
30-2224-679	5/8"	House Keyed Alike	679	2.70	2.60	2.50
30-2224-695	5/8"	House Keyed Alike	695	2.70	2.60	2.50
30-3141-KD	7/8"	Keyed Different	–	2.65	2.55	2.40
30-2225-631	7/8"	House Keyed Alike	631	2.60	2.50	2.35
30-2225-641	7/8"	House Keyed Alike	641	2.60	2.50	2.35
30-2225-644	7/8"	House Keyed Alike	644	2.60	2.50	2.35
30-2225-679	7/8"	House Keyed Alike	679	2.60	2.50	2.35
30-2225-695	7/8"	House Keyed Alike	695	2.60	2.50	2.35
30-4720-SB96	7/8"	House Keyed Alike	SB96	3.25	3.05	2.70
30-4721-SB97	7/8"	House Keyed Alike	SB97	3.25	3.05	2.70
30-4723-SB99	7/8"	House Keyed Alike	SB99	3.25	3.05	2.70
30-3143-KD	1-1/8"	Keyed Different	–	2.75	2.65	2.55
30-2226-631	1-1/8"	House Keyed Alike	631	2.70	2.60	2.50
30-2226-641	1-1/8"	House Keyed Alike	641	2.70	2.60	2.50
30-2226-644	1-1/8"	House Keyed Alike	644	2.70	2.60	2.50
30-2226-679	1-1/8"	House Keyed Alike	679	2.70	2.60	2.50
30-2226-695	1-1/8"	House Keyed Alike	695	2.70	2.60	2.50
30-4724-SB96	1-1/8"	House Keyed Alike	SB96	3.50	3.25	3.05
30-4725-SB97	1-1/8"	House Keyed Alike	SB97	3.50	3.25	3.05
30-3144-SB99	1-1/8"	House Keyed Alike	SB99	3.50	3.25	3.05
30-3156-XXX		Keys Only, for K.A. Locks		1.60	1.60	1.60

DUO CAM LOCKS, TRIPLE BITTED

- High security, 14 tumbler mechanism
- For existing key series, see your sales representative
- Keyed Different locks come with 2 keys per lock and a 1-1/4" straight cam
- Keyed Alike locks come with a 1-1/4" straight cam
- Keys must be purchased separately for Keyed Alike locks

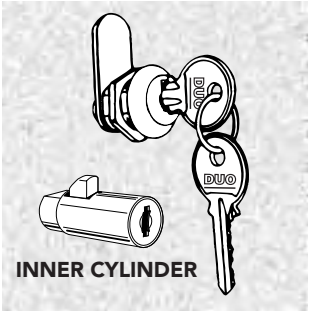

INNER CYLINDER

Part Number	Length	Keying	Price per ea.	L/50	L/100
30-1134-XXX	5/8"	Keyed Alike	14.45	14.30	14.20
30-1134-KD	5/8"	Keyed Different	14.45	14.30	14.20
30-1138-XXX	7/8"	Keyed Alike	14.45	14.30	14.20
30-1138-KD	7/8"	Keyed Different	24.95	23.55	22.85
30-1142-XXX	1-1/8"	Keyed Alike	14.55	14.45	14.30
30-1142-KD	1-1/8"	Keyed Different	20.35	20.15	19.95
30-1898-XXX	Inner Cylinder	Keyed Alike	14.65	14.55	14.45
30-1898-KD	Inner Cylinder	Keyed Different	19.20	19.00	18.80
30-1904-XXX	Keys		1.90	–	–

MINIMUM LOCK ORDER POLICY

For Cam Type or Inner Cylinder Locks

New keyed alike series: Minimum 25 locks

Reorders of keyed alike locks: Minimum 10 locks

DOUBLE BITTED LOCKS

- The standard for the coin operated industry
- Double-bitted, 6-disc, tumbler locks gives extra security
- 2 sets of 3 tumblers lock in opposite direction
- Shiny nickel finish with a die cast construction
- 90 degree turn with key coming out in the locked position only
- Each lock comes with 1-1/4" straight cam and 2 keys

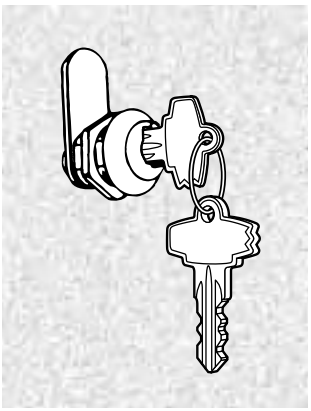

Part Number	Length	Keying	Key #	Price per ea.	L/50	L/100
30-1326-7505	7/8"	House K.A.*	3001	3.60	3.50	3.35
30-1326-7506	7/8	House K.A.*	3002	3.60	3.50	3.35
30-1326-7507	7/8"	House K.A.*	3003	3.60	3.50	3.35
30-1326-7508	7/8"	House K.A.*	3004	3.60	3.50	3.35
30-1326-7509	7/8"	House K.A.*	3005	3.60	3.50	3.35
30-2485-7500	1-1/8"	House K.A.*	3006	3.75	3.60	3.50
30-2485-7501	1-1/8"	House K.A.*	3007	3.75	3.60	3.50
30-2485-7502	1-1/8"	House K.A.*	3008	3.75	3.60	3.50
30-2485-7503	1-1/8"	House K.A.*	3009	3.75	3.60	3.50
30-2485-7504	1-1/8"	House K.A.*	3010	3.75	3.60	3.50

*K.A.= KEYED ALIKE

HAPP 7 PIN TUMBLER LOCKS

- 7-pin tumbler locks provide high security
- Bright chrome finish
- 90 degree turn
- Key can only be removed in the locked position
- Keyed Different locks come with 2 keys per lock and a 1-1/4" straight double D/double ended cam
- Keyed Alike locks come with a 1-1/4" straight double D/double ended cam

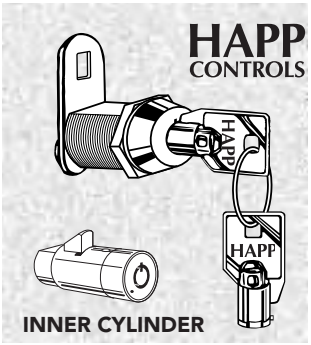

INNER CYLINDER

- Keys for Keyed Alike locks must be purchased separately
- Locks can be keyed to your existing 7 pin tubular key. Must send sample key
- Most Keyed Alike lock orders can be shipped within 48 hours
- For your added protection, any code issued by Happ Controls can be restricted in our computer system exclusively to your company

Part Number	Length	Keying	Key #	Price per ea.	L/50	L/100
30-2201-XXX	5/8"	Keyed Alike	New #	5.40	5.10	4.80
30-2202-KD	5/8"	Keyed Different	–	5.40	5.10	4.80
30-2203-XXX	7/8"	Keyed Alike	New #	5.70	5.40	5.10
30-2203-KD	7/8"	Keyed Different	–	5.70	5.40	5.10
30-2207-XXX	1-1/8"	Keyed Alike	New #	5.90	5.70	5.40
30-2207-KD	1-1/8"	Keyed Different	–	5.90	5.70	5.40
30-2210-XXX	Keys only for keyed alike locks			1.80	–	–

Note: 3/8" Also Available

Inner Cylinder (I.C.)

30-2481-XXX	I.C.	Keyed Alike	9.35	8.85	8.50
30-2481-KD	I.C.	Keyed Different	9.35	8.85	8.50
30-2481-SP802	I.C.	House Keyed Alike 802	9.35	8.85	8.50
30-2481-SP804	I.C.	House Keyed Alike 804	9.35	8.85	8.50
30-2210-XXX	Keys only for keyed alike locks		1.75	–	–

- Note: We can also re-key your existing locks

© HAPP CONTROLS

LOCKS

GEMATIC TYPE LOCKS

- This high-security, 'top of the line' lock has an 8-Pin tumbler mechanism.
- Programmable combinations allow you to change the combinations, on the spot, in just seconds.
- Saves replacing the entire lock in case a key is lost or stolen.
- Gematic type locks consist of 8 different lock combinations
- Comes with 1-1/4" straight cam
- A gold finished change key makes identification easy
- Operating keys and Change keys must be ordered separately

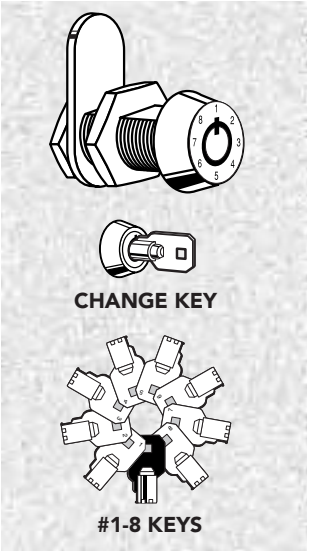

Part Number	Length	Keying	Price per ea.	L/50	L/100
30-1600-XXX	5/8"	Keyed Alike	14.45	14.00	13.50
30-1602-XXX	7/8"	Keyed Alike	14.85	14.45	14.00
30-1604-XXX	1-1/8"	Keyed Alike	15.65	15.15	14.65
30-1608-XXX	Inner Cylinder	Keyed Alike	14.65	14.15	13.75
30-1626-XXX	Keys, #1 thru #8		1.90	–	–
30-1624-XXX	Change Key		2.10	–	–

MINIMUM LOCK ORDER POLICY

For Cam Type or Inner Cylinder Locks

New keyed alike series: Minimum 25 locks

Reorders of keyed alike locks: Minimum 10 locks

FORT LOCKS, DOUBLE BITTED

- Double bitted locks offer a higher security than single bitted locks
- High-quality, bright finish die-cast metal construction
- Key turns 90 degrees
- Key may be removed only in the locked position
- Keyed Different locks come with 2 keys per lock and a 1-1/4" straight cam
- Keyed Alike locks come with 1 key per lock and a 1-1/4" straight cam

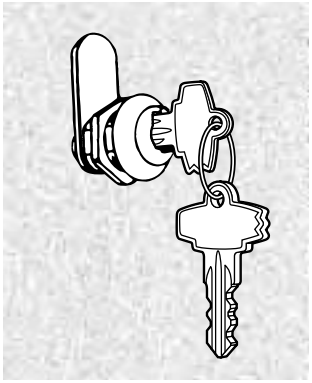

Part Number	Length	Keying	Key #	Price per ea.	L/50	L/100
30-3146-XXX	7/8"	Keyed Alike	New #	4.30	4.20	4.05
30-3145-KD	7/8"	Keyed Different	–	4.20	4.05	3.95
30-3148-XXX	1-1/8"	Keyed Alike	New #	4.40	4.30	4.20
30-3147-KD	1-1/8"	Keyed Different	–	4.30	4.20	4.05
30-3149-XXX	Keys Only, for Keyed Alike Locks			1.90	–	–

DURACAM® II REMOVABLE CORE CAM LOCKS

- Medeco® DuraCam® II removable core cam locks offer security solutions to unique challenges.
- The DuraCam II allows you to make a quick combination change in case a key is lost. Simply remove the core and replace it with a new one, providing a whole new combination.
- A DuraCam® II core can be replaced in a matter of seconds therefore reducing machine downtime due to lock replacement.
- Along with the removable core feature the DuraCam® II comes with one of the strongest keys available, designed to prevent breakage.

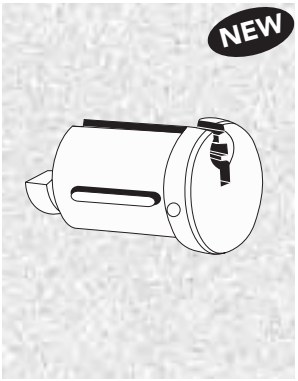

Features and Benefits:

- Rapid core replacement saves time and money related to lock replacement.
- Thicker key helps prevent key breakage.
- Keys come with a lifetime warranty against breakage.
- Vertical keyway will minimize machine downtime due to key breakage.
- Patented key control provides protection from unauthorized duplication of keys.
- Medeco's Authorized Service Centers provide fast service for replacement cores, locks and keys.
- Construction cores are available for installing locks at manufacturers, which will minimize machine set up costs.
- Various cam lengths available
- Keys sold separately
- DuraCam® II locks are special order only. All locks are restricted to specific customers

Part Number		Price per ea.
30-3000-7BWXX	DuraCam® II 7/8" Removable Core Cam Locks	26.65
30-3001-7BWXX	DuraCam® II Operating Key	3.65
30-3002-7BWXX	DuraCam® II Core Key	3.65

DO YOU WANT TO KNOW EACH TIME YOUR ORDER SHIPS OUT?

E-mail notification and order **tracking information** is now available from Happ Controls! Contact your sales representative or e-mail our customer service department at: **info@happcontrols.com** with your account information.

LOCKS

VAN INNER CYLINDER LOCK

- State-of-the-art, American made security system
- Flat face design and absence of a "keyway" make Van locks virtually pull resistant
- One piece housings make Van lock virtually punch resistant
- Keys sold separately
- Hardened steel pin in the face of the lock makes Van locks virtually drill resistant
- Keys are practically hand made, no key machines or blank keys can duplicate these keys.
- New K5 metal keys are more durable than plastic keys

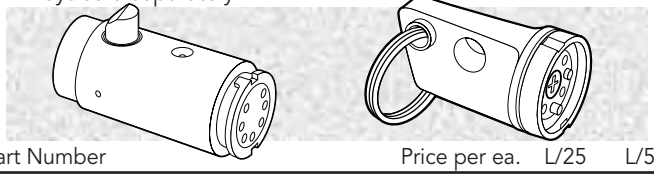

Part Number		Price per ea.	L/25	L/50
30-1882-XXX	Van Inner Cylinder Lock, Keyed Alike	18.00	16.65	15.35
30-1885-XXX	Key Only, for Van Inner Cylinder Lock	7.10	—	—

MINIMUM LOCK ORDER POLICY

For Cam Type or Inner Cylinder Locks

New keyed alike series: Minimum 25 locks
Reorders of keyed alike locks: Minimum 10 locks

SWITCH LOCKS

- Key is removable in OFF position only
- Momentary or ON/OFF available
- Double bitted keys are keyed alike #2341 with 2 keys per lock
- Spade terminals
- Barrel length: 1.0635"
- Overall length 2.03"
- 4 amps/125VAC, 2amps/250VAC

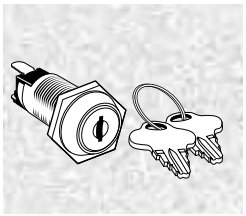

Part Number		Price per ea.
30-1086-00	Momentary Switch Lock Key is removable only in the OFF position	6.90
30-1086-01	On/Off Switch Lock Key is removable only in the OFF position	6.90

DOOR CAM

- For BALLY slots
- Ref. No. A-2930

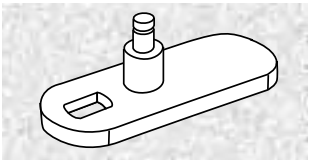

Part Number		Price per ea.	L/100
70-0112-20	Door Cam	3.75	3.15

SMALL CAM FOR MARS LE3900 LRC

- Specially designed for the Mars LE3900 cash box
- For use with 5/8" locks threaded stem with 2 flat sides
- Length: 15/16"
- Lock sold separately

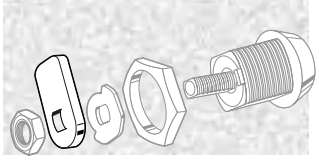

Part Number		Price per ea.
30-0168-00	Small Cam for Mars LE3900 LRC	2.35

FLEX-ACE INNER CYLINDER LOCKS

- Flex-Ace Quick-Change locks allows you to change tumbler combinations, at the location, quickly and easily.
- Enables you to key all your equipment to one key number
- Keys sold separately

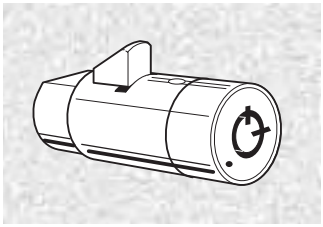

Part Number	Length	Keying	Price per ea.	L/50	L/100
30-1875-XXX	1-5/8"	Keyed Alike	13.40	12.70	12.10
30-1099-XXX	—	Key	2.85	—	—

FLEX-ACE PARTS FOR CHANGING KEY COMBINATIONS

- Allows you to change the tumblers in the lock without removing the lock from the cabinet.
- Keep additional coders and keys to change key combinations quickly.
- Order new tumbler combinations to be shipped in coder with keys cut to the new combination.
- Remove lock cap from unlocked old lock with release pin and insert new tumblers with the loading tool.

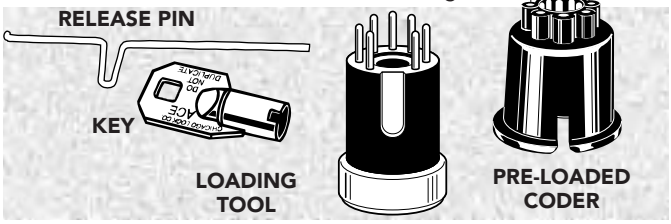

Part Number		Price per ea.
30-1083-XX	Pre-Loaded Coder for for Flex-Ace	2.70
30-1084-00	Loading Tool for Flex-Ace Coders	10.95
30-1085-00	Release Pin for Flex-Ace Coders	1.90
30-1099-XXX	Keys for Flex-Ace Coders	2.50

SHOWCASE SLIDING LOCK ASSEMBLY

- Used for locking sliding glass doors, showcases, display cases, etc.
- Brite chrome finish resists rust and corrosion
- 3-1/2" locking slide
- Includes 2 keys, keyed alike

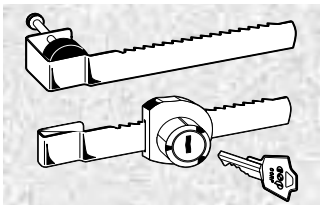

Part Number		Price per ea.	L/6
30-2194-ES202	Showcase Sliding Lock Assembly	11.80	10.95

SHOWCASE SLIDING LOCK ASSEMBLY

- Includes: 2 one-way bars, lock assembly and two keys
- Keyed alike, key # 221
- Works with wood or glass
- 90 degree key turn to open
- Key is removable at 12:00 & 3:00 positions
- Removable cylinder for re-keying
- Anti-spread housing
- Manufactured by National Cabinet Lock
- Other key codes available

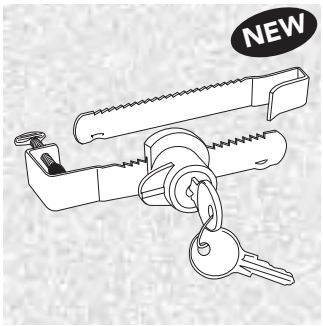

Part Number		Price per ea.	L/6
30-2194-221	Showcase Sliding Lock Assembly	11.80	10.95

© HAPP CONTROLS

CAMS

REPLACEMENT CAMS FOR ACE, GEM & GEMATIC LOCKS

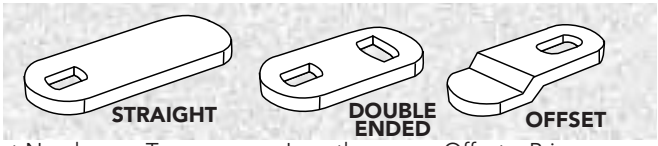

Part Number	Type	Length	Offset	Price per ea.
30-1037-00	Straight	1"	—	.71
30-1525-000	Straight	1-1/8"	—	.61
42-0440-00	Straight	1-1/4"/Double D	—	.66
30-1813-00	Straight	1-5/16"	(Center Hole)	.60
30-1527-000	Straight	1-1/2"	—	.61
30-1076-00	Straight	1-5/8″	—	.67
30-1075-00	Straight	1-5/8"	(Center Hole)	.70
30-1528-000	Straight	1-3/4"	—	.71
30-2115-00	Straight	2″	—	.71
30-1035-00	Straight	2 1/4"	—	.71
30-3803-40	Straight	2 1/2"	—	.71
30-1110-00	Offset	1-1/8"	1/8"	.61
30-1021-00	Offset	1-1/8"	3/8"	.79
30-1111-00	Offset	1-1/4"	1/4"	.79
30-1536-000	Offset	1-5/8"	1/4"	.61
30-1117-00	Offset	1-5/8"	7/16"	.79
30-3804-00	Offset	2"	1/4"	.91

DUO LOCK CAMS

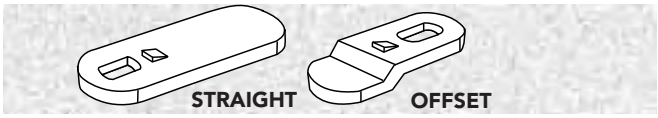

Part Number	Type	Length	Offset	Price per ea.
30-1191-100	Straight	1"	—	.80
30-1192-1250	Straight	1-1/4"	—	.86
30-1440-00	Straight	1-1/2"	—	.66
30-1192-1750	Straight	1-3/4"	—	.92
30-1195-11250S	Offset in	1-1/8"	5/16"	1.40
30-1198-1250S	Offset in	1-1/4"	1/8"	1.30
30-1870-00	Offset in	1-1/4"	1/4"	1.20
30-1871-1250S	Offset out	1-1/4"	1/4"	1.40

SPECIAL OFFSET CAM

- 90 degree stop
- Used on National Cigarette Machines
- 1″ L x 5/16″ offset

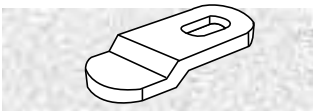

Part Number		Price per ea.
30-1022-00	90 Degree Offset Cam	.48

REPLACEMENT CAMS FOR FORT LOCKS

Part Number	Type	Length	Offset	Price per ea.
30-1863-00	Straight	1″	—	.61
30-1864-00	Straight	1-1/4"	—	.61
30-4901-60	Straight	1-1/2"	—	.61
30-1866-00	Straight	1-3/4"	—	.61
30-1867-00	Straight	2"	—	.61
30-1534-000	Offset	1"	1/4"	.61
30-1112-00	Offset	1-1/2"	1/4"	.71
30-1113-00	Offset	1-1/2"	3/8"	.71

HOW TO MEASURE CAMS AND CAM LOCKS

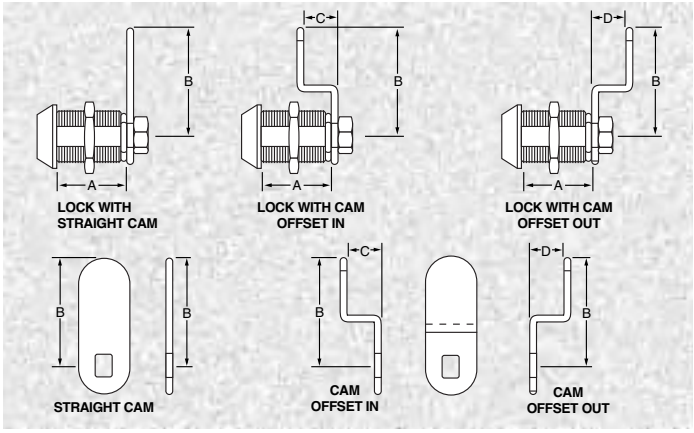

A dimension is the cylinder length. Measure from the back of the lock head to the front of the cam.

B dimension is the cam length. Measure from center of cam hole to tip of cam.

C or **D** dimension is the cam offset.

ECONOMY LOCK CAMS

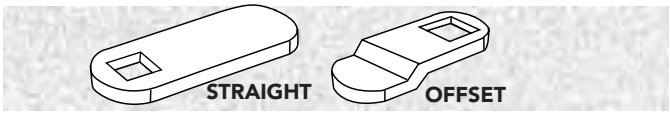

Part Number	Type	Length	Offset	Price per ea.
30-1527-500	Straight	1-1/2"	—	.53
30-2227-00	Offset	1-1/8"	1/4"	.61
30-2227-01	Offset	1-3/8"	1/4"	.61
30-2227-02	Offset	1-1/2"	1/4"	.91

90 DEGREE CAM STOP FOR ACE LOCKS

- Stops the key in the 90 degree position
- Key is removable only in the locked position
- Minimum order 12

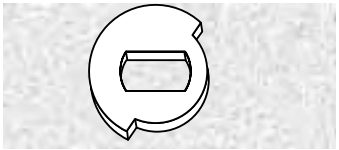

Part Number		Price per ea.
30-1802-00	Stop Cam, 90 Degree turn	.48

REPLACEMENT NUT FOR GEM-GEMATIC LOCKS

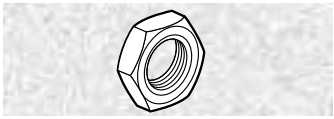

Part Number		Price per ea.
30-2287-00	Gem-Gematic Cam Nut	.15

LOCK CAM ADAPTERS

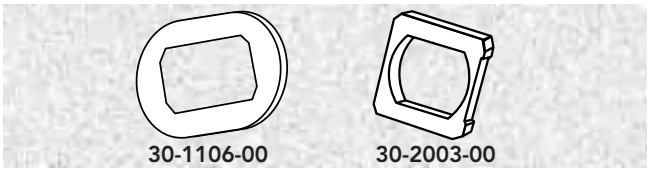

Part Number		Price per ea.
30-1106-00	Cam Lock Adapter converts Chicago Cam to Ace, Abloy, Gem, or Medeco	.43
30-2003-00	Cam Lock Adapter converts Fort Cam to Ace, Abloy, Gem, or Medeco	.43

RETRACT-A-BADGE ID CARDHOLDER

- Great for holding security ID cards
- Adds user friendly efficiency to High-tech security
- Steel clip on back allows for easy attachment without damage to clothing
- 30" retractable nylon cord easily allows badge to be extended and swiped without removing
- Construction: 1-3/16" diameter plastic case, steel clip, 30" nylon cord and vinyl snap-closure cardholder

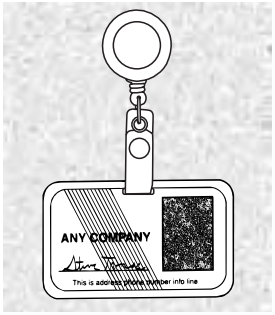

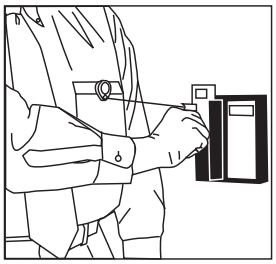

Part Number		Price per ea.	L/25	L/50
30-0142-00	Retract-A-Badge (Black)	2.50	2.10	1.90
30-0142-01	Retract-A-Badge (White)	2.50	2.10	1.90
30-0142-02	Retract-A-Badge (Blue)	2.50	2.10	1.90

DELUXE MINI-BAK ID CARDHOLDER

- Great for holding security ID badges
- Unique twist-free design prevents "spinning", so badge always faces front
- Patented design for extra security
- Clips on, will not damage clothing
- Strong metal swivel clip on back allows ease of use
- Tested to over 180,000 retractions; lasts four times longer
- Color: Dark Blue
- Can be personalized with your logo.
- Made in the USA
- Construction: plastic case, steel clip, 36" nylon cord and vinyl strap with snap
- Size: 1-3/16" W x 1-3/8" H x 1/4"D
- Note: For personalization of 30-0143-00 there is a 150-pc minimum order and a one-time charge of $40.00 per color for art setup and color matching. Customer must supply artwork and color specifications. Mini-Bak colors available are Red, White, Blue, Black and Gray.

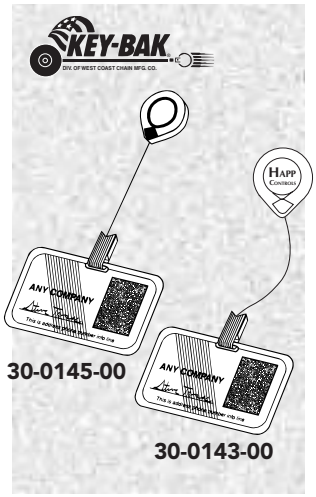

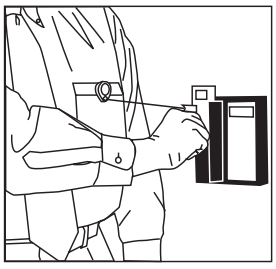

Part Number		Price per ea.	L/12	L/24
30-0145-00	Deluxe Mini-Bak ID Cardholder, Dark Blue	6.15	5.65	5.05
30-0145-01	Deluxe Mini-Bak ID Cardholder, Black	6.15	5.65	5.05
30-0143-00	Personalized Deluxe Mini-Bak ID Cardholder	6.15	each L/150	

QUICK RELEASE KEY RING

- A simple, convenient way to organize your keys
- Makes it easy to separate work keys from other keys
- Easily separates into two key rings
- Compact and strong
- Bright nickel plate finish

Part Number		Price per ea.
30-0136-00	Quick Release Key Ring	1.55

SECURE-A-KEY

- Eliminates wear and tear on pockets
- Keeps keys readily available
- Simply clip SECURE-A-KEY to your belt and snap key ring on
- Made of stainless steel, will not rust or discolor

Part Number		Price per ea.
30-0138-00	Secure-A-Key	3.15

HUS-KEY

- Now every belt clip KEY-BAK can carry 5 times the weight
- HUS-Key simply snaps into place on the KEY-BAK case
- HUS-KEY supports key load
- Can be used with all clip model KEY-BAK units except Super 48

Part Number		Price per ea.
30-0137-00	HUS-KEY	2.10

Visit Our Web Site:
happcontrols.com
for NEW
Product Updates!!
HAPP
VISIT OUR WEBSITE

KEY-BAK SUPER 48 KEY REEL

- Polycarbonate high strength case
- Dust shield keeps interior clean
- Kevlar cable is stronger but lighter than chain and is smooth in action
- Clip/Loop attachment allows dual functionality
- Clip design similar to pistol holsters; meets penal "anti-snatch" rules
- Carries up to 5 times the weight of other retractors
- All black design, high-tech look
- Oversize split ring is standard for larger load
- Corrosion proof for long service life

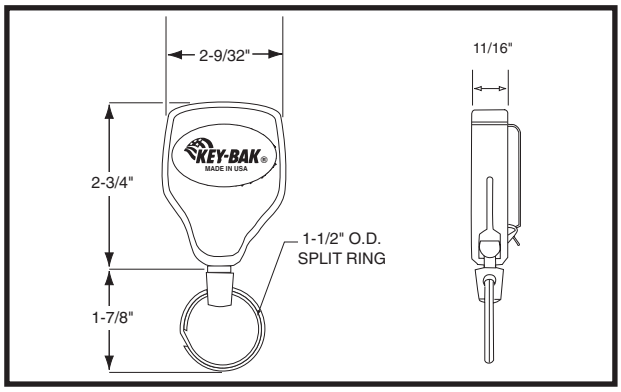

Part Number		Price per ea.	L/12
30-0101-01	Super 48 Key Reel with Kevlar Cable	12.48	11.60
30-0101-002	Super 48 Key Reel with Steel Cable	13.05	12.10

KEY-BAK "SPINNER" KEY REEL

- Can be extended at any angle – a full 360-degree spin with virtually no wear on the chain or cable
- "Spinner" can be removed from it's base and used simply as a key holder
- "Spinners" belt holder can accommodate most Nokia phones
- Clip-On style
- Available with 24" chain or 48" cable
- Color: attractive black metal case

Part Number		Price per ea.
30-0101-04	"Spinner" Key Reel with 24" Chain	9.85
30-0101-05	"Spinner" Key Reel with 48" Cable	12.05

KEY-BAK SUPER 48 LE FOR SECURITY PROFESSIONALS

- For uniformed law enforcement professionals such as Sheriffs and Police
- Leather belt loop on back fits a standard 2.75" wide Sam Browne duty belt
- Polycarbonate high strength case
- Dust shield keeps interior clean and prolongs service life
- Extension member of stainless steel cable with tough nylon jacket or Kevlar cable available
- Loop design meets penal "anti-snatch" rules
- Carries up to 5 times the weight of other retractors
- All black design offers high-tech look
- Oversize split ring is standard for larger load
- Corrosion proof for long service life

Part Number		Price per ea.	L/12
30-0101-03	Key-Bak Super 48 LE with stainless steel cable	13.85	12.40
30-0101-08	Key-Bak Super 48 LE with Kevlar cable	13.85	12.40

KEY-BAK KEY REELS

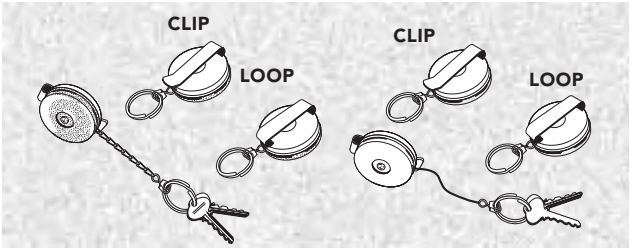

KEY-BAK WITH CHAIN

- Clips-On style or belt loop style
- Chrome case
- 24" stainless steel chain
- Swivels to prevent chain twisting

KEY-BAK WITH CABLE

- Rugged steel case is only 2" dia.
- 48" stainless steel cable with 95 lb. breaking strength
- Cable is 7 x 7 strand nylon jacketed construction
- Belt look or Clip mount style available

Part Number		Price per ea.	L/6
30-1951-00	Clip on Style with Chain	10.40	9.40
30-0104-00	Belt Loop Style with Chain	10.40	9.40
30-0101-00	Clip on Style with Cable	13.05	12.00
30-0102-00	Belt Loop Style with Cable	13.05	12.00

KEY-BAK REELS

- Eliminate pilferage while allowing items to be used or handled
- Hundreds of applications – retail stores, hospitals, industrial companies, point of purchase displays, trade shows, etc.
- Precision spring mechanism and super strong stainless steel chain or cable provide a versatile tool with unlimited uses
- Tested to over 100,000 cycles
- Available in textured chrome or black vinyl front
- Heavy duty steel case
- 6 oz. retention fully retracted for 48" cable units
- 8-10 oz. retention fully retracted for 24" chain units

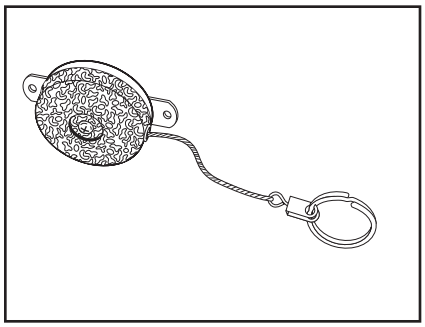

30-0150-00

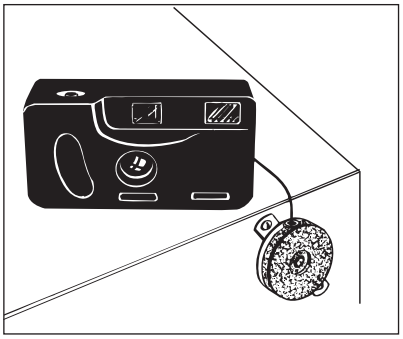

30-0160-00

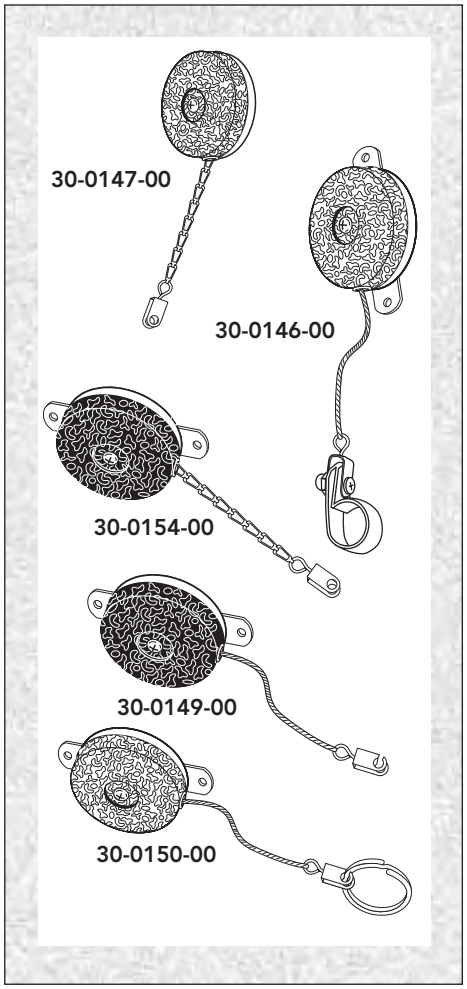

24" STAINLESS STEEL CHAIN

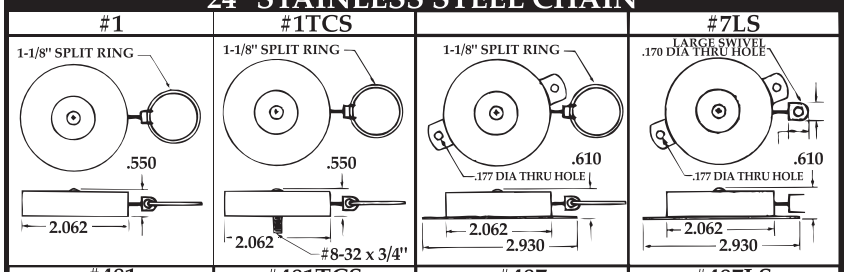

48" STAINLESS STEEL CABLE

Part Number	Model	Color	Length	Chain/Cable	Attachment	Mounting	Price per ea.
30-0160-00	#1BLS	Black	24"	Chain	Large Swivel without Split Ring	Plain Back	9.10
30-0161-00	#1LS	Chrome	24"	Chain	Large Swivel without Split Ring	Plain Back	9.10
30-0157-00	#1BSTCS	Black	24"	Chain	With Split Ring	3/4" Thread Cutting Screw	9.10
30-0154-00	#7BLS	Black	24"	Chain	Large Swivel without Split Ring	Bracket	10.75
30-0155-00	#7LS	Chrome	24"	Chain	Large Swivel without Split Ring	Bracket	10.75
30-0146-00	#7LSC	Chrome	24"	Chain	Large Swivel with Plastic Clamp	Bracket	10.75
30-0152-00	#481B	Black	48"	Cable	Large Swivel with Split Ring	Plain Back	11.45
30-0153-00	#481	Chrome	48"	Cable	Large Swivel with Split Ring	Plain Back	11.45
30-0151-00	#481TCS	Chrome	48"	Cable	With Split Ring	3/4" Thread Cutting Screw	11.45
30-0147-00	#487BLS	Black	48"	Cable	Large Swivel without Split Ring	Bracket	12.85
30-0149-00	#487B	Black	48"	Cable	With Split Ring	Bracket	12.85
30-0150-00	#487	Chrome	48"	Cable	With Split Ring	Bracket	12.85
30-0148-00	#487LS	Chrome	48"	Cable	Large Swivel without Split Ring	Bracket	12.85

HAPP CONTROLS
SERVICE CENTER
will professionally repair your:
HAPP CONTROLS
or
KLOPP INTERNATIONAL, INC.
Coin Counter

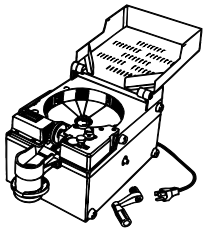

"Only" $75.00 plus parts

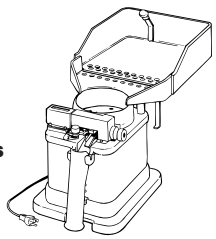

HAPP CONTROLS
- Quick turnaround time
- 30 day warranty on repairs
- Repairs exceeding $75.00 plus parts will be quoted for customer approval
- Our trained technician will replace only the necessary parts, and adjust to original specification
- Repairs done at our Las Vegas Service Center

KLOPP INTERNATIONAL, INC.

OKAY'S KEY SAFE

- Ideal for slot mechanics, locksmiths, security people, etc.
- Very secure belt loop style with key ring
- Handy and convenient
- Eliminates pocket wear

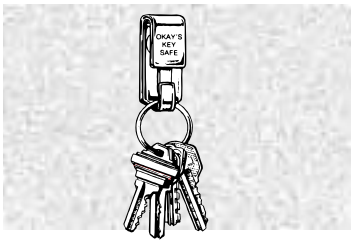

Part Number		Price per ea.
30-0095-00	Okay's Key Safe	4.45

SNAP HOOK KEY RING

- Heavy-duty steel
- Chrome finish

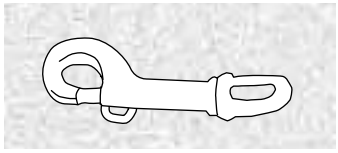

Part Number		Price per ea.
30-0096-00	Snap Hook Key Ring	4.70

SPRING SNAP FOR KEYS

- Swivels for easy use
- Zinc plated
- 4-3/8" Overall length, 3/4" wide

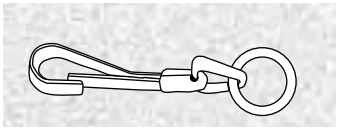

Part Number		Price per ea.
30-0097-00	Spring Snap For Keys	1.30

WRIST COIL WITH RING

- Superior quality coil always springs back, never loses its shape
- Fits comfortably on wrist
- 7/8" nickel plated tempered steel split ring
- Assorted colors: black, dark blue, teal, purple, red and white
- Coil measures 2" in diameter; stretches to more than 12" in diameter

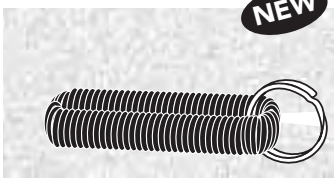

Part Number		Price per ea.
30-0202-00	Wrist Coil With Ring	2.00

SNAP HOOK AND KEY RING WITH COIL

- Great for slot technicians or for use with player tracking cards
- Plastic snap hook easily hooks on belt loops or clothing
- Long 20" vinyl coated coil expands to approximately 5 times its size
- Metal key ring on end for keys or player tracking cards
- Color: Black

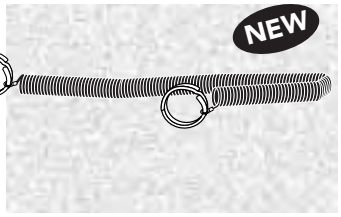

Part Number		Price per ea.
30-0099-01	Snap Hook and Key Ring with Coil	1.30

SECURITY RINGS

- Protective collars
- These rings offer protection from grabbing lock heads with pliers and other tools
- Hardened nickel plated steel

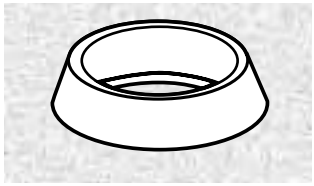

Part Number	Take-up	Depth	Price per ea.
30-0169-00	3/16"	1/2"	3.55
30-0169-10	1/16"	1/4"	3.75

CHROME KEY RINGS

- Quality chrome finish
- Various sizes available

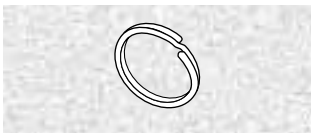

Part Number	I.D.	Price per ea.
30-0094-00	1-1/8"	.59
30-0099-00	1-1/2"	.66
30-0100-00	1-3/4"	.70

LOCK SPACER COLLARS

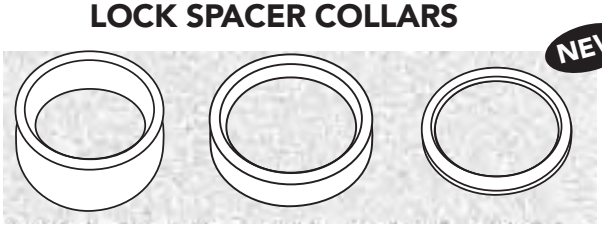

- Take-up rings for standard 3/4" diameter lock barrel
- Zinc plated steel
- 7 popular sizes

Part Number		Price per ea.
30-2002-00	1/8" Lock Spacer Collar	2.05
30-2004-00	1/16" Lock Spacer Collar	2.05
30-2005-00	3/32" Lock Spacer Collar	2.05
30-2006-00	1/4" Lock Spacer Collar	2.05
30-2008-00	3/8" Lock Spacer Collar	1.99
30-2009-00	7/16" Lock Spacer Collar	2.05
30-2010-00	1/2" Lock Spacer Collar	2.05

COLORED CODED LOCK RINGS

- Made from durable plastic
- Identify which series of locks are your machines with the Happ Controls color coded lock rings
- Various colors available
- Fits tubular key type locks and switch locks
- Now you can color code each route to a different color

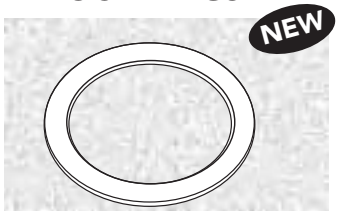

Part Number		Price per ea.
30-0308-RED	Color Coded Lock Ring-Red	.21
30-0308-GREEN	Color Coded Lock Ring- Green	.21
30-0308-BLUE	Color Coded Lock Ring- Blue	.21
30-0308-ORANGE	Color Coded Lock Ring- Orange	.21
30-0308-WHITE	Color Coded Lock Ring- White	.21

HEAVY-DUTY CHOKER CHAINS

- 24" long
- 12 per master carton

Part Number		Price per ea.
30-0083-00	Heavy-Duty Choker Chains	7.25

SASH CHAIN

- Great for key chains
- Trade size #25
- Sold per foot
- 100 ft. per box

Campbell®

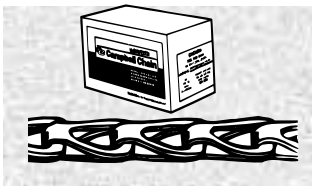

Part Number	Type	Price per ft.
30-0092-00	Blue Chrome	3.55
30-0091-00	Bronze	2.50

SOLID BRASS TAGS

- Solid brass tags for heavy duty applications
- Can be stamped or engraved
- Perfect for industrial applications and where long term identification is needed
- .040" thick brass
- Sold in boxes of 100
- Available in diameters of 1", 1.25", 1.375", and 2"

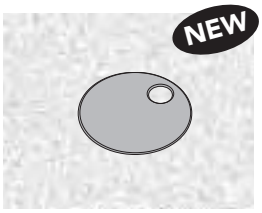

Part Number		Diameter	Price per box
30-0205-00	Solid Brass Tag	1"	18.75
30-0197-00	Solid Brass Tag	1.25"	40.75
30-0297-00	Solid Brass Tag	1.375"	39.55
30-0304-00	Solid Brass Tag	2"	70.35

SPUR WASHER

- Prevents the cam assembly from turning when installed in a round hole
- Two (2) 3/16" diameter holes
- Minimum order 10 pcs.
- For wood installation

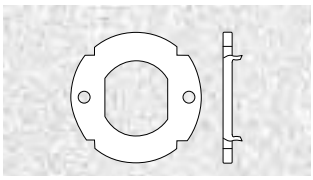

Part Number		Price per ea.
30-1966-00	Spur Washer for Wood Installation	.53

ANCHOR PLATES

- Prevents lock and cam assembly from turning when installed in a round hole
- For metal or wood installation
- Minimum order 10
- Size: 2-3/16" L x 1-1/4" W x 3/32" Thick
- .640 hole

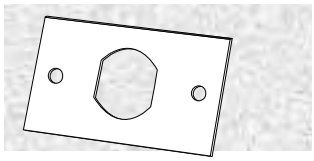

Part Number		Price per ea.
30-1965-00	Anchor Plate	1.15

TUBULAR KEY HOLDER

- Supports and strengthens key to eliminate breakage
- Allows for easier and faster opening of locks
- Fastened with an 8-32 screw included with holder

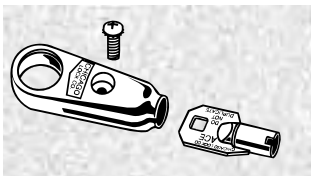

Part Number		Price per ea.	L/12
30-1049-00	Tubular Key Holder	11.30	10.30

HAVE IT YOUR WAY!

CHECK IT OUT!

eHAPP

JUST GO TO OUR WEB SITE AND LOGIN

Place orders when you want - anytime!
No more phone tag,
Leisurely view past purchases,
Easily duplicate past orders,
e-mail notifications of shipments

NEW EASY-TO-USE SHOPPING CART SYSTEM AVAILABLE ON-LINE 24 HOURS A DAY

happcontrols.com

HAPP CONTROLS PUCK LOCK

- Stop break-ins with this economical heavy-duty padlock
- Shackleless body with solid one-piece chrome case
- 1.5" thick by 2.875" diameter case
- 13/32" locking steel rod
- Keyed differently, 2 keys per lock

Part Number		Price per ea.
30-1017-000	Happ Controls Puck Lock	14.20

PUCK LOCK HASP

- Tough security for your Cold Can Drink Machines
- Prevents thieves from prying, hammering or twisting the padlock
- Extremely heavy duty 1/4" steel hasp with inside reinforcement brackets
- Ideal for the Puck Lock style padlock
- 7-1/2" x 4-1/2" x 1/4" front puck lock bracket with welded cup to protect the padlock from vandalism
- 11" x 2" x 1/4" side mount offset bar
- Obscure, durable black powder coat paint
- Includes mounting hardware
- Drilling required for the mounting hardware

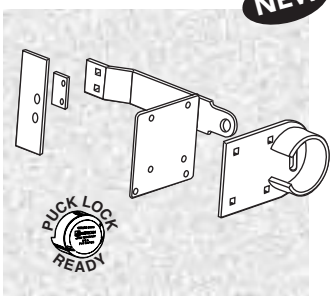

Part Number		Price per ea.
30-0186-00	Puck Lock Hasp	42.00

GUARDED HASP, BY MASTER LOCK

- Ideal for vans, trucks, gates and vending and amusement equipment
- Prevents thieves from prying, hammering or twisting the padlock
- Defeats attempts to pry and cut
- Hardened solid steel lock body withstands forcible attacks
- 2 pieces hasp

Part Number		Price per ea.
30-0174-00	Guarded Hasp, By Master Lock	20.80

"AMERICAN" SERIES 2000 PUCK LOCK

- "The Locksmith's Lock"
- Patented shackleless body with solid one piece chrome finish case
- Maximum security 6 pin tumbler cylinder
- 1-1/2" thick by 2-7/8" dia. case
- 13/32" steel locking rod
- Keyed Alike, 2 keys per lock

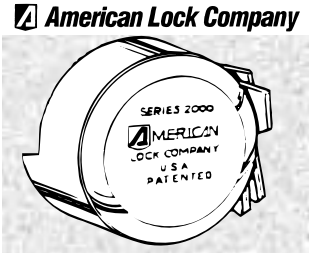

Part Number		Keying	Price per ea.	L/12
30-1016-XXX	Series 2000 Puck Lock	Alike	29.05	27.20
30-1015-XXX	Series 2000 Puck Lock	Different	30.20	29.00

"FEDERAL" 1000 SERIES PADLOCK

- Hardened steel shackle
- Stainless steel lock body
- 4 pin tumbler
- Protected shackle
- Brass cylinder
- Deadbolt double locks
- 3/8" shackle diameter

Part Number		Price per ea.
30-2327-XXX	1000 Series Padlock Keyed Alike	13.65

MILLENNIUM PADLOCK

- Stop break-ins with this unique, ultra heavy-duty, keyed alike padlock
- Hardened steel outside slip ring prevents thieves from prying, or twisting, the padlock to break off.
- Millennium padlock protects the shackle of the hasp
- Plug lock is replaceable in case key is lost or stolen
- High security, 'half moon' style key
- Private keyed alike series are available, dedicated to your account only ! No one else in the country will be able to purchase your key series. 2 week lead time for new series, minimum order 10.
- House Keyed Alike series are in stock with no security restrictions, available for immediate delivery.
- Keys purchased separately

Part Number		Price per ea.
30-0192-XXX	Millennium Padlock, New K.A. Series	28.45
30-0191-XXX	Key, for New K.A. Series Millennium Padlock	5.20
30-0192-001	Millennium Padlock, House Key #H1	28.45
30-0192-002	Millennium Padlock, House Key #H2	28.45
30-0192-003	Millennium Padlock, House Key #H3	28.45
30-0192-004	Millennium Padlock, House Key #H4	28.45
30-0192-005	Millennium Padlock, House Key #H5	28.45
30-0192-006	Millennium Padlock, House Key #H6	28.45
30-0191-001	Key, For Millennium Padlock, House Key #H1	5.20
30-0191-002	Key, For Millennium Padlock, House Key #H2	5.20
30-0191-003	Key, For Millennium Padlock, House Key #H3	5.20
30-0191-004	Key, For Millennium Padlock, House Key #H4	5.20
30-0191-005	Key, For Millennium Padlock, House Key #H5	5.20
30-0191-006	Key, For Millennium Padlock, House Key #H6	5.20

"ABUS" PADLOCK

- Smaller sized, keyed alike padlock for use in low security areas where there is still a need to lock up.
- 1" x 1-1/8" x 1/2" brass case
- 3/8" case hardened shackle
- 1/2" shackle clearance
- Keyed Alike, 2 keys per lock

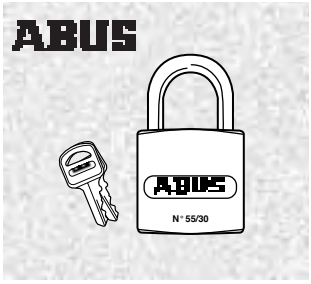

Part Number		Price per ea.	L/12
30-1560-00	House "Abus Padlock" Keyed Alike	7.30	6.15

MASTER LOCK #1 PADLOCK

- Reinforced 1-3/4" wide laminated steel body
- Hardened 5/16" diameter steel shackle
- 7/8" shackle clearance
- Precision 4-pin tumbler cylinder
- Dual independent locking levers
- Rustproofed for external wear
- 2 keys furnished per lock

Part Number		Price per ea.	L/12
30-1210-XXX	Master #1, Keyed Alike	11.90	11.30
30-1209-000	Master #1, Keyed Different	11.80	11.20

MASTER LOCK #3 PADLOCK

- Reinforced 1-1/2" wide laminated steel body
- Hardened 9/32" diameter steel shackle, 3/4" clearance
- Precision 4-pin tumbler cylinder
- Dual independent locking levers
- Cadium Rustproofed for external wear
- 2 keys furnished per lock

Part Number		Price per ea.	L/12
30-1208-XXX	Master #3, Keyed Alike	9.90	9.40
30-1207-000	Master #3, Keyed Different	9.80	9.25

MASTER LOCK #5 PADLOCK

- Reinforced 2" wide laminated steel body
- Hardened 3/8" diameter steel shackle
- 1" shackle clearance
- Precision 4-pin tumbler cylinder
- Dual independent locking levers
- Rustproofed for external wear
- 2 keys furnished per lock

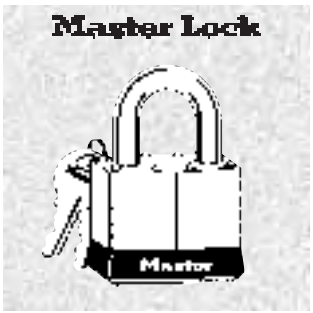

Part Number		Price per ea.	L/12
30-1212-XXX	Master #5, Keyed Alike	13.85	13.20
30-1211-000	Master #5, Keyed Different	13.70	13.10

MASTER LOCK #7 PADLOCK

- Strong 1-1/8" wide laminated steel case
- 3/16" shackle, 9/16" clearance
- Precision pin tumbler locking mechanism
- Cadium rustproofed for external wear
- 2 keys furnished per lock

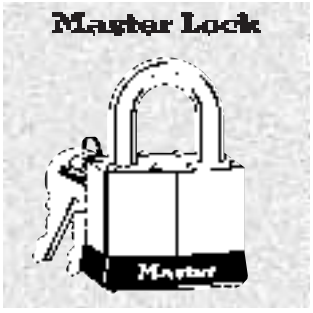

Part Number		Price per ea.	L/12
30-1206-XXX	Master #7, Keyed Alike	8.05	7.40
30-1205-000	Master #7, Keyed Different	7.85	7.30

"AMERICAN" PROFESSIONAL H-10 PADLOCK

- Solid steel body (hardened)
- Case hardened steel shackle
- Case diameter: 2"
- Shackle clearance: 1-1/16"
- Overall Height: 3-1/2"
- Shackle diameter: 7/16"
- Keyed Alike, 2 keys per lock

Part Number		Price per ea.	L/12
30-1000-XXX	Professional H-10 Padlock	27.75	22.85

CASE HARDENED SOLID STEEL HASPS

- Solid steel materials
- Recessed concealed screws
- All mounting hardware included

Part Number		Price per ea.	L/12
30-1185-000	#825 Straight Bar Hasp	9.85	8.80
30-1186-000	#535 Centered Hole Hasp	8.35	8.25

FLEX-O-HASP

- Heavy wrought steel
- Multi-purpose
- Top security

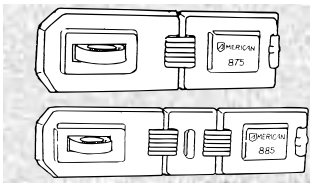

Part Number		Price per ea.
30-1188-000	#875 Single Link Hasp	7.95
30-1189-000	#885 Double Link Hasp	8.55

HIDDEN SECURITY BAR HASP

- Used on 8-line or Redemption cabinets
- Mounts inside the cabinet
- Padlock hangs flush to the cabinet
- Low visibility
- Includes mounting hardware
- Made in USA

Part Number		Price per ea.
30-0317-00	Hidden Security Bar Hasp	4.10

HASP FOR MERIT UPRIGHT GAMES

- Welded hinge prevents pin removal
- No eyebolts exposed
- Hardware included
- Made in USA
- Size: 12" L X 2" W X 3/16" thick
- Single bar with hidden hinge and a protective cover for your padlock
- Made from heavy 2" wide black powder coated steel

Part Number		Price per ea.
30-1192-12	Hasp for Merit Upright Games	17.30

PINBALL HASP

- For use on pinball doors that are mounted by four carriage bolts
- Easy to install, no drilling necessary
- For use with 7/16" Shackle Padlock
- Simply remove 2 hex nuts on right and left side ofcoin door frame mounting and install
- 15" long 15-3/4" with hinge extended
- Includes mounting hardware

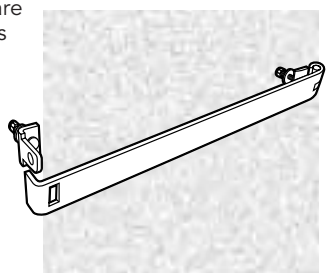

Part Number		Price per ea.
30-0004-00	Pinball Hasp	16.20

TOPLESS BAR HASP

- Designed for all game doors, excellent for pinball games
- Single bar with hidden hinge and a protective cover for your padlock
- Made from heavy 2" wide black powder coated steel
- Welded hinge prevents pin removal
- No eyebolts exposed
- Hardware included
- Made in USA
- Size: 15-1/2" from eye bolt to carriage bolt
- Overall length: 17-1/8"

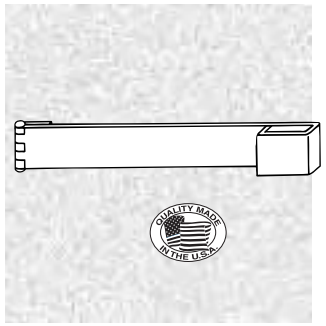

Part Number		Price per ea.
30-1192-00	Topless Bar Hasp	15.75

FLAT BAR HASP

- For the extra protection needed to prevent break-ins on your games front door
- Heavy duty 3/16" steel thick, 1-1/2" wide
- Complete with hardware

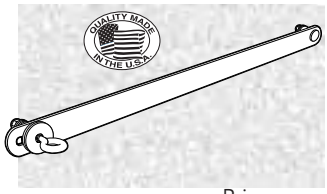

Part Number		Price per ea.
30-1195-00	16" Long Flat Bar Hasp	7.30
30-0001-00	24" Long Offset Flat Bar Hasp	8.55

HASP FOR DYNAMO POOL TABLES

- Heavy duty 3/16" x 1-1/2" wide
- Color: Black
- For use on Dynamo pool tables
- Includes hardware and instructions

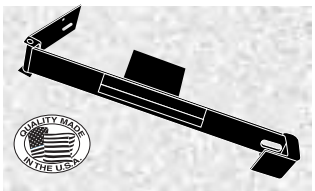

Part Number		Price per ea.
26-1158-00	Hasp for Dynamo Pool Tables	28.45

HASP FOR DYNAMO HOCKEY TABLES

- Heavy duty
- Color: Black
- Includes hardware and instructions

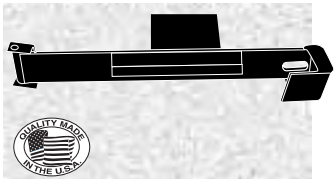

Part Number		Price per ea.
30-0115-00	Hasp for Dynamo Hockey Tables	28.45

WRAP AROUND ADJUSTABLE BAR HASP

- Perfect for amusement games and vending machines
- Used on 22" to 27" cabinets
- Needs only 1 padlock
- Padlock mounts on front of machine
- Complete with hardware

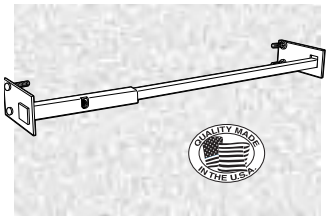

Part Number		Price per ea.
30-1193-00	Wrap Around Adjustable Wrap	22.85

DELUXE WRAP AROUND ADJUSTABLE BAR HASP

- Perfect for amusement games and vending machines
- Heavy-duty – 1" and 1.25" square tubing
- Side plates are 5-1/4" long
- Needs only 1 padlock
- Padlock mounts on side of machine
- Hardware includes:
  - 1 padeye
  - 1 hook
  - 8 carriage bolts .25" X 1.25"
  - 8 .25" hex nuts
  - 2 backup plates

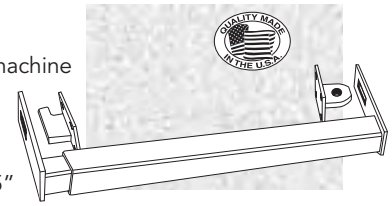

Part Number		Price per ea.
30-2000-00	Adjustable Bar Hasp 19-1/2"to 32"	19.35
30-0006-00	Adjustable Bar Hasp 30"to 45"	36.25

DELUXE WRAP AROUND ADJUSTABLE HASP WITH 11" SIDE PLATES

NEW

- Only 1 padlock needed
- Adjusts from 20" to 36"
- 11" Side bars make this ideal for use on "Pot of Gold"
- Black painted finish
- Heavy-duty square tubing
- Mounting hardware included
- Made in USA

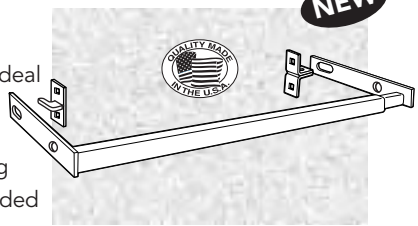

Part Number		Price per ea.
30-0013-01	Adjustable Bar Hasp 20"to 36" with extended 11" side bars	24.05

OFFSET FLAT BAR HASP

- For the best protection of break-ins on your games front door
- Heavy duty 3/16" steel thick, 1-1/2" wide
- Complete with hardware

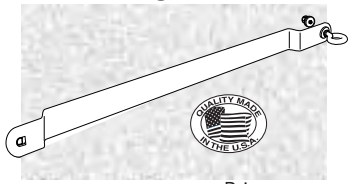

Part Number		Price per ea.
30-0011-00	12" Long Offset Flat Bar Hasp	8.45
30-1627-00	16-1/2" Long Offset Flat Bar Hasp	8.45
39-1011-00	25" Long Offset Flat Bar Hasp	9.70

HASP FOR VALLEY/DYNAMO POOL TABLE

- Designed to fit a recessed 10" wide cash box opening
- Easy to install, simply drill two 3/8" holes
- Heavy duty metal with innovative guide lip
- Color: Black
- Includes instructions and drilling template

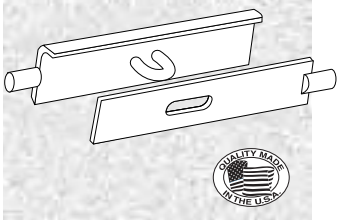

Part Number		Price per ea.
30-0053-00	Valley & Dynamo Pool Table Security Hasp	22.95

SAMMY USA SECURITY BAR KIT FOR WING SHOOTING CHAMPIONSHIP

NEW

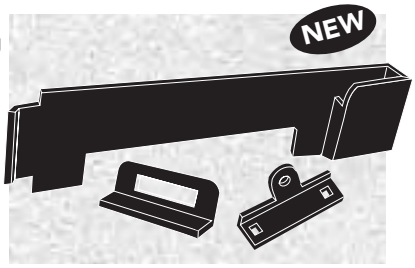

- Direct fit for Sammy Wing Shooting Championship
- Wing Shooting Championship cabinets are pre-drilled for easy installation
- Installs in less than 10 minutes, simply remove the supplied bolts and install the two brackets
- Heavy duty black painted metal
- May also be used on Sammy 25" Upright and 33" Showcase cabinets with Deer Hunting USA, Turkey Hunting USA,

  (hardware for these cabinets must be purchased separately)
- Kit includes: Locking bar with enclosed padlock area, and 2 mounting brackets
- Made in USA

Sammy

Part Number		Price per ea.
30-0200-00	Sammy USA Security Bar Kit	54.99

SAMMY USA SECURITY BAR KIT FOR SPORTS ARENA

NEW

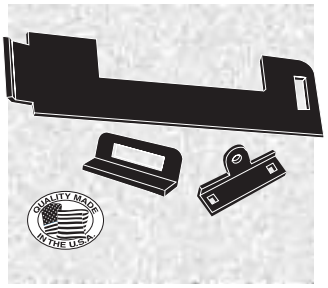

- Direct fit for Sports Arena
- Installs in less than 10 minutes
- Heavy duty black painted metal
- Kit includes: Locking bar, and 2 mounting brackets
- Made in USA

Part Number		Price per ea.
30-0200-01	Sammy USA Security Bar Kit	54.99

RETROFIT SECURITY HASP FOR GOLDEN TEE® GOLF

NEW

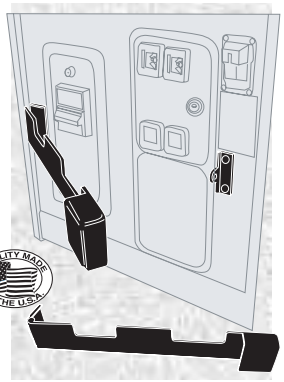

- Shackle protector and low profile mounting virtually eliminates break-in's
- Uses existing hardware on the game
- Made in the USA from 1/4" laser cut steel
- Black wrinkle powder coat paint matches the game's finish
- Uses hidden hinge for added security
- Laser cut smooth edges for safety

Part Number		Price per ea.
30-0004-01	Retrofit Security Hasp - Golden Tee®	52.50
30-0004-02	Eyelet with Hardware	7.15

TOUCH SCREEN SECURITY HASP

NEW

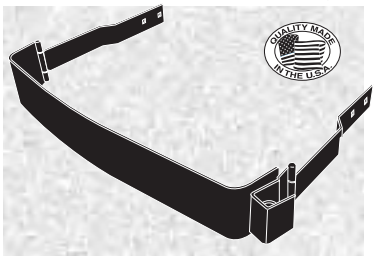

- Fits Merit Mega-Diamond touch screens
- Accepts Standard or Disklock padlocks
- Black powder coated
- Includes: (2) backing plates, (4) carriage bolts, washers and nuts
- Made in USA

Part Number		Price per ea.
30-0005-02	Touch Screen Security Hasp	44.95

HASP FOR VALLEY POOL TABLE

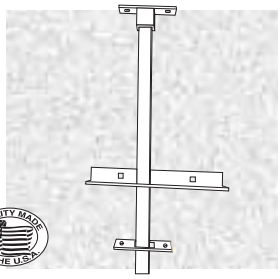

- Heavy duty
- Designed for Valley tables
- Can be adapted to other tables
- Color: Black
- Includes hardware and instructions
- Made in the USA

Part Number		Price per ea.
30-0028-00	Hasp for Valley Pool Tables	22.90

HEAVY DUTY OVER-UNDER MID-WIDTH DOOR HASP

NEW

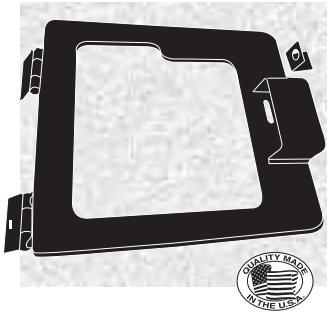

- Notch cut in hasp to allow it to work on both Happ Controls and Wells-Gardner Over/Under Mid-Width doors
- This heavy duty steel hasp stops vandals from kicking in the coin door
- Welded top padlock cover insures your padlock is protected
- Laser cut smooth edges for safety
- Durable black wrinkle paint
- Hidden hinges with a non-removable welded hinge pin
- Made in the U.S.A.

Part Number		Price per ea.
30-0300-00	Heavy Duty Over-Under Mid-Width Door Hasp	27.80

HASP FOR ARACHNID GALAXY 2

NEW

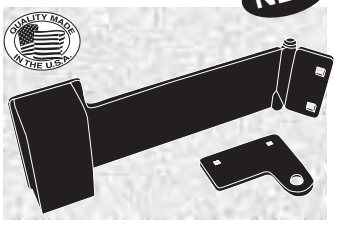

- 3/16" heavy duty steel
- Black textured powder coat
- Reinforced padlock cover
- Hinged on left side
- Hardware included
- Backing plates included for increased strength
- Made in USA

Part Number		Price per ea.
30-0302-00	Hasp for Arachnid Galaxy 2	25.45

© HAPP CONTROLS

HEAVY DUTY OVER-UNDER DOOR HASP

- This heavy duty steel hasp stops vandals from kicking in the coin door
- Welded top padlock cover insures your padlock is protected
- Hidden hinges with a non-removable welded hinge pin
- Bolt to bolt 9-1/2", overall 11-1/8"

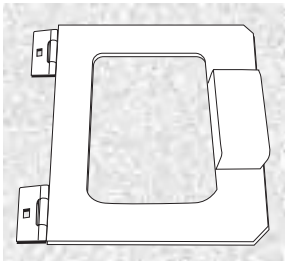

Part Number		Price per ea.
30-2001-00	Heavy Duty Over-Under Door Hasp	22.40

LOCK HASP

- Simple, economic way of adding a padlock to any machines, garage, vehicle etc.
- Made with 1/8" steel
- Complete with hardware

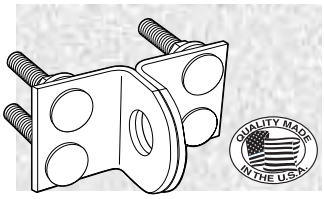

Part Number		Price per ea.
30-1194-000	Lock Hasp	5.85

DRIVING CABINET VAULT HASP

- For use on Atari Rush 2049 Driving Cabinet Vault
- Simply attaches to the existing mounting holes on the sides of the existing vault
- Heavy Duty 11 gauge steel
- Rugged Black powder paint finish
- Complete with mounting hardware
- Welded hinge pins for additional security

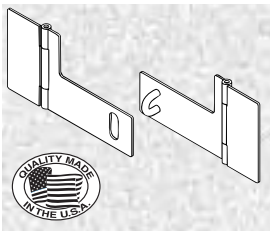

Part Number		Price per ea.
30-0135-00	Driving Cabinet Vault Hasp	78.40

SUPER HEAVY DUTY 4-1/2" BAR HASP

- 3/16" heavy plate steel
- Eyebolt is a 1/2" shaft, that is heat treated, hardened steel that defies bolt cutters
- Existing cabinet cam lock is placed through the bar, securing bar to cabinet
- Complete with hardware
- Made in the U.S.A.

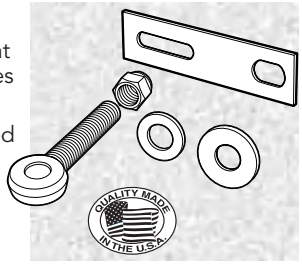

Part Number		Price per ea.
30-1005-00	Super Heavy Duty 4-1/2" Bar Hasp	11.00

HASP FOR STANDARD CHANGE-MAKERS EC100 AND EC101

NEW

- Fits models EC100 and EC101
- 7 gauge steel plate
- 1/4" ring welded on the inside of the plate allows hasp to lay flush with the cabinet
- Includes: (2) 1/8" "L" brackets welded together for padlocks
- Color: Textured Black River
- Complete with all mounting hardware
- Made in USA

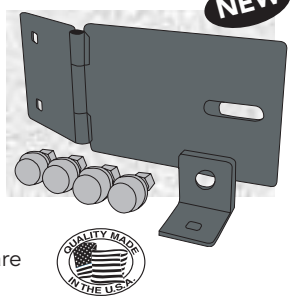

Part Number		Price per ea.
30-0318-00	Hasp for Standard Change Makers EC100 and EC101	30.10

HEAVY DUTY SECURITY BAR/HASP

- For **Daytona Crusin'** and **Sega Rally** driving games
- Protect those "high volume" games from theft and damage
- Accommodates a regular padlock
- Built with hidden hinge pins
- Heavy duty shackle protector
- Complete with hardware

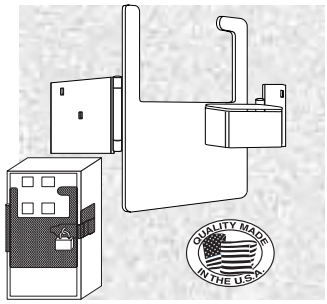

Part Number		Price per ea.
30-0005-00	Heavy Duty Security Bar/Hasp	42.20

WELDED TOP PADLOCK COVER

- Welded Top Padlock Cover
- Heavy duty steel 3/16" x 2" wide
- 3/8" eyebolt
- Black powder coated
- Made in USA

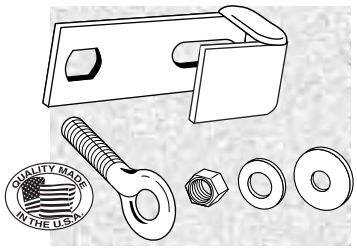

Part Number		Price per ea.
30-0033-00	Welded Top Padlock Cover	10.95

HEAVY DUTY SHACKLE GUARD

- Works with most padlocks
- Prevent cutting of the padlocks
- Rugged 3/16" steel gives maximum protection
- 2-1/2" H x 2" W
- 1-1/8" opening for hasp
- Works with most "L" shape hasps
- Laser cut – no sharp corners
- Made in the U.S.A.
- Black powder coated

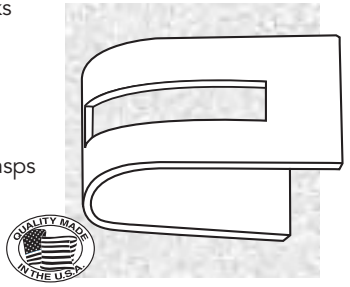

Part Number		Price per ea.
30-0003-00	Heavy Duty Shackle Guard	6.15

SECURITY BAR HASP FOR SILENT SCOPE

NEW

- For use on Konami Silent Scope with Mid-Width Over/Under doors
- Covered padlock hasp protects your padlock
- Fits 11-1/4" to 12" wide doors
- Made from 3/16" thick heavy duty steel
- Black powder coated
- Mounting hardware included
- Made in USA

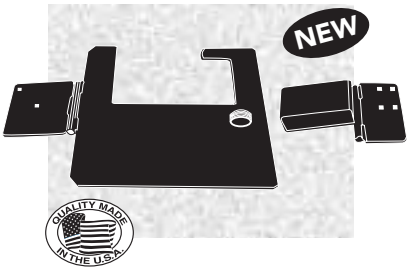

Part Number		Price per ea.
30-0141-00	Security Hasp for Silent Scope	55.35

DIXIE NARCO LOCK COVER KIT

NEW

- Ref. # 480,011,200.14
- Used on 'E' models and Vandal Resistant Vendors with pushbutton coin return and Dr. Pepper machines

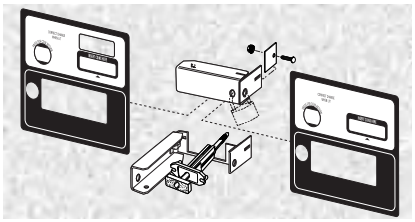

Part Number		Price per ea.
H48001120014DN	Dixie Narco Lock Cover Kit	28.10

DIXIE NARCO LOCK COVER KIT

NEW

- Ref. # 572,010,100.34
- Used in Coke, Vandal Resistant (Push button coin return) and Non-Vandal Resistant Vendor (Lever coin return)
- Black powder coat finish

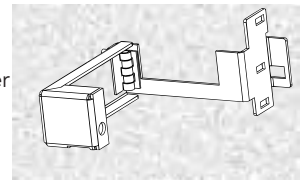

Part Number		Price per ea.
H57201010034DN	Dixie Narco Lock Cover Kit	26.00

DIXIE NARCO LOCK COVER KIT

NEW

- Ref. No. 604,054,500.54
- Used on Dr. Pepper V4 machines
- Black powder coat finish

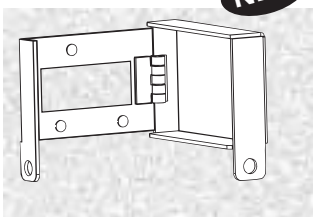

Part Number		Price per ea.
H60405450054DN	Dixie Narco Lock Cover Kit	26.95

DIXIE NARCO LOCK COVER KIT

NEW

- Ref. No. 624,010,000.04
- Used on Coke 'Wave' machine
- Red powder coat finish

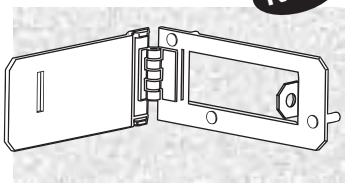

Part Number		Price per ea.
H62401000004DN	Dixie Narco Lock Cover Kit	26.95

REPLACEMENT LIFT HANDLE SET

NEW

- For National Vendors machines
- Brushed stainless finish
- Set includes:
- Lift Handle Lever, Ref. No. 117-2190
  (1) Lift Handle Base, Ref. No. 117-2191

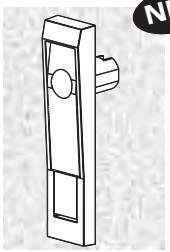

Part Number		Price per ea.
30-0307-00	Replacement Lift Handle Set	13.25

VENDO LOCK COVER

NEW

- Ref. # 1037595
- Used on the 'Robo' door (All steel door) with adhesive sign face
- Black powder coat finish

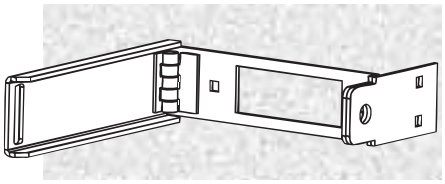

Part Number		Price per ea.
30-0187-00	Vendo Lock Cover	22.65

VENDO LOCK COVER

NEW

- Ref. No. 1047779-6
- Used on electronic Coke machines
- Black powder coat finish

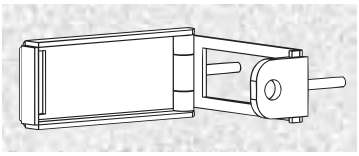

Part Number		Price per ea.
30-0188-00	Vendo Lock Cover	39.40

VENDO LOCK COVER

NEW

- Ref. No. 1116899
- Used on Coke machines
- Red powder coat finish

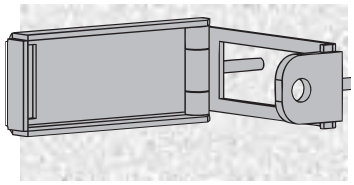

Part Number		Price per ea.
30-0189-00	Vendo Lock Cover	25.15

ROYAL VENDORS LOCK COVER

NEW

- Ref. No. 141110
- Used on Vandal Resistant Coke machines (post serial # 1207) and Merlin IV machines
- Black powder coat finish

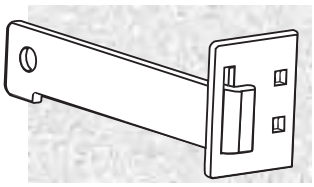

Part Number		Price per ea.
30-0190-00	Royal Vendors Lock Cover	8.30

Visit Our Web Site:
happcontrols.com
for **NEW** Product Updates!!

© HAPP CONTROLS

THE HAPP GUARDIAN HASP FOR OVER/UNDER MID-WIDTH VALIDATOR DOORS

- Unique design requires no drilling, mounts directly to the cabinet
- For use on 40-3000-00 series over/under Mid-Width doors with or without upstacker
- 3/16" thick painted steel
- Welded padlock cover to insure padlock protection
- Fits on cabinets with very little clearance around the validator door and those that have no supports to mount a standard security bar
- Can be easily moved from one cabinet to another
- Two different versions available based upon height of upper door (Type I or Type II)

  Type I – Overall height of upper door is 10.70"

  Type II – Overall height of upper door is 9.90"

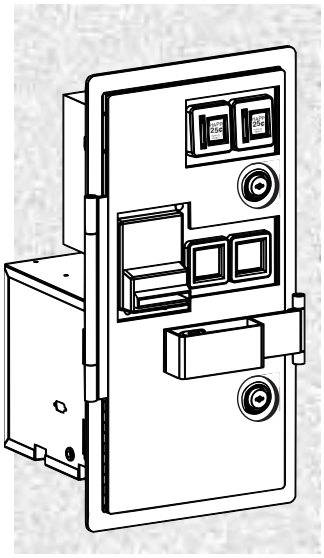

HAPP CONTROLS

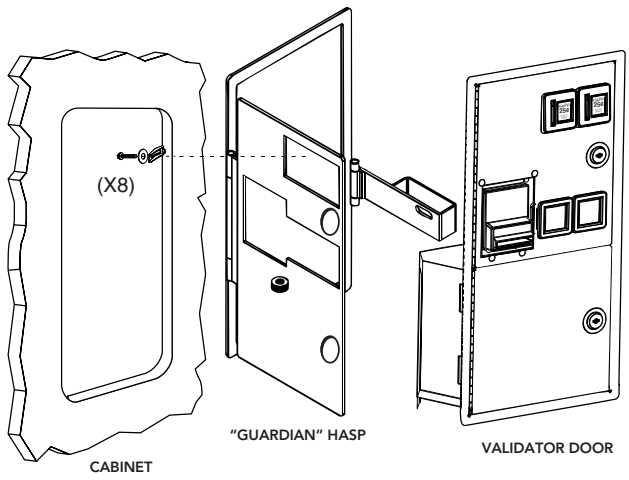

To install, simply remove existing Mid-Width Door and slide door into large metal opening of hasp and re-install door to cabinet.

Part Number		Price per ea.
30-0171-00	"Guardian" Over/Under Mid-Width Validator Door Hasp Type I	91.55
30-0171-10	"Guardian" Over/Under Mid-Width Validator Door Hasp Type II	95.30

Visit Our Web Site:
happcontrols.com
for *NEW* Product Updates!!

THE HAPP GUARDIAN HASP FOR OVER / UNDER 2-ENTRY STACKER VALIDATOR DOOR

- Unique design requires no drilling, mounts directly to the cabinet
- For use on 40-6000-00 series over/under 2-entry stacker validator doors with or without validator
- 3/16" thick painted steel
- Welded padlock cover to insure padlock protection
- Fits on cabinets with very little clearance around the validator door and those that have no supports to mount a standard security bar
- Can be easily moved from one cabinet to another

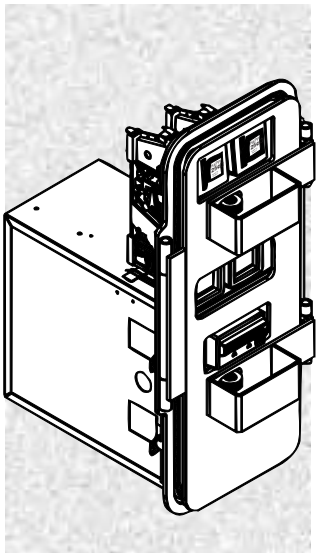

HAPP CONTROLS

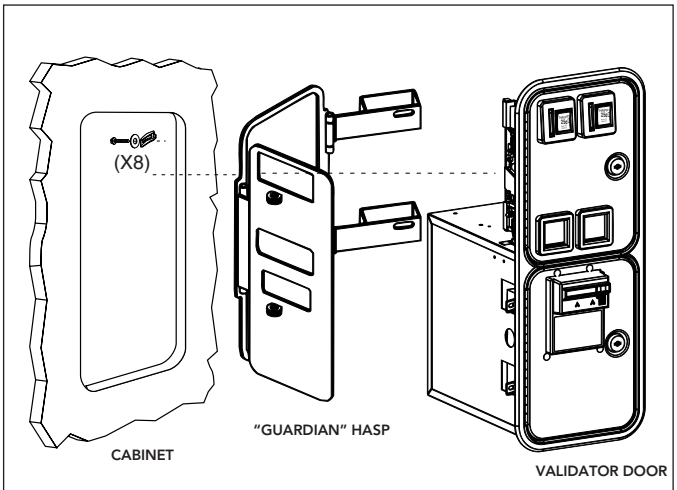

To install, simply remove existing 2-Enry Stacker Door and slide door into large metal opening of hasp and re-install door to cabinet.

Part Number		Price per ea.
30-2400-200	"Guardian" Over/Under 2-Entry Stacker Validator Door Hasp	80.60

1/2" EYEBOLT

- Made from hardened drop-forged steel
- Resists cutting
- Powder coated black
- Includes washer and locknut
- Made in USA

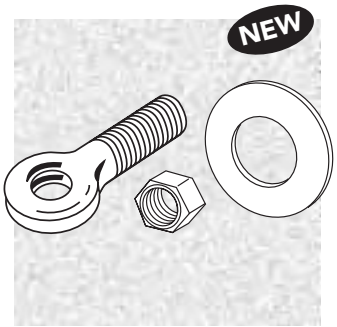

Part Number		Price per ea.
30-0021-00	1/2" Eyebolt	7.95

THE HAPP GUARDIAN HASP FOR OVER / UNDER VALIDATOR DOORS

- Unique design requires *no drilling*, mounts directly to the cabinet
- For use on 40-7000-00 series Over/Under Validator doors with upstacker
- 3/16" thick painted steel
- Fits on cabinets with very little clearance around the Validator door and those that have no supports to mount a standard security bar
- Welded padlock cover to insure padlock protection
- Can be easily moved from one cabinet to another

HAPP CONTROLS

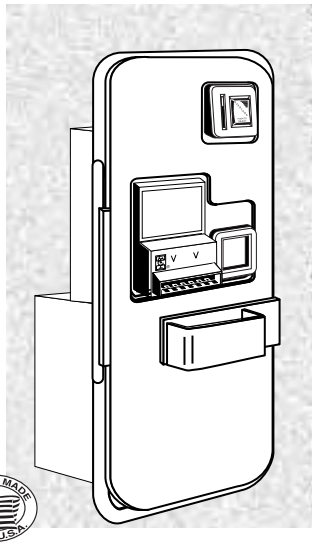

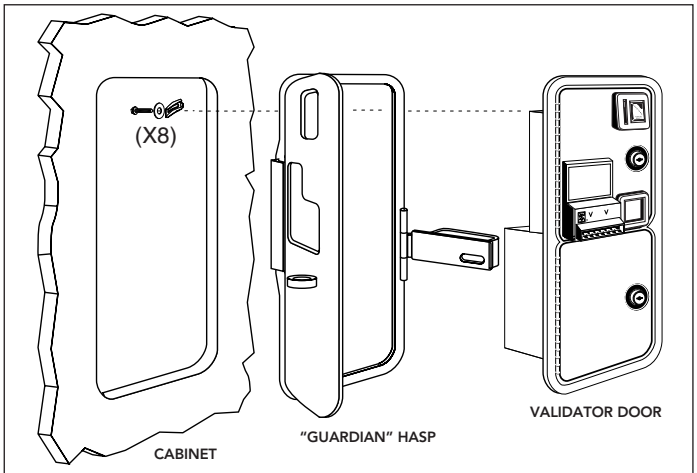

To install, simply remove existing Over/Under Validator Door and slide door into large metal opening of hasp and re-install door to cabinet.

Part Number		Price per ea.
30-2400-00	"Guardian" Over/Under Validator Door Hasp	74.80

THE HAPP GUARDIAN HASP FOR OVER / UNDER DOORS

- Unique design requires *no drilling*, mounts directly to the cabinet
- 3/16" thick painted steel
- Fits on cabinets with very little clearance around the Over/Under door and those that have no supports to mount a standard security bar
- Welded padlock cover to insure padlock protection
- Can be easily moved from one cabinet to another

HAPP CONTROLS

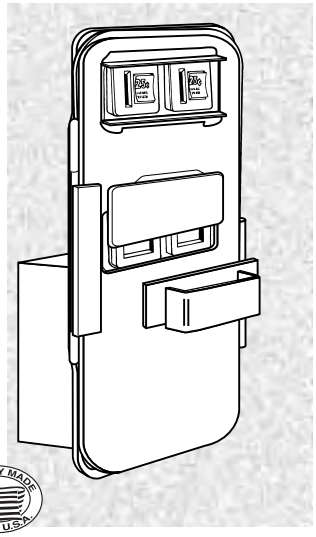

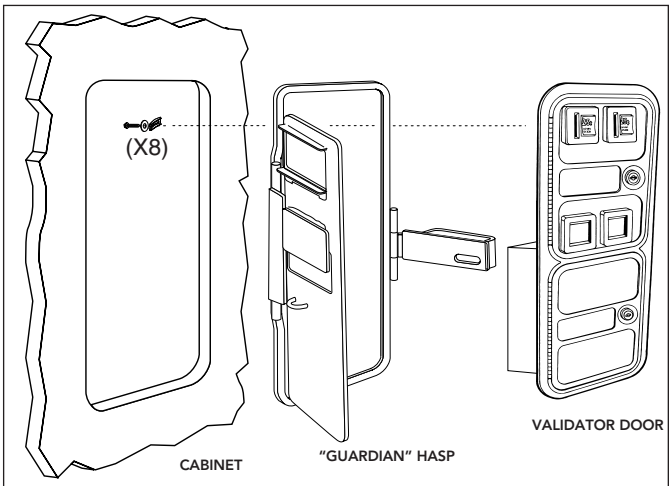

To install, simply remove existing Over/Under Coin Door and slide door into large metal opening of hasp and re-install door to cabinet.

Part Number		Price per ea.
30-2401-00	"Guardian" Over/Under Door Hasp	74.80

SECURITY ALARM SYSTEM

- Impact sensor designed to sound alarm when impact, abuse and rocking is detected
- Sensor adjusts to desired sensitivity
- 128 db alarm sounds for 30 seconds
- Automatically turns off and resets
- Amusement alarm has 2 magnetic switches
- Vending alarm has 1 magnetic switch
- Wide voltage range (5 to 15 vdc)
- Low current drain (0.1 UA @ 12 vdc)
- 12 volt battery pack, with connectors (27-1064-BAT)
- Small controller size, only 1.85" x 2.25"
- Easy to install

Part Number		Price per ea.
27-1064-10	Amusement Machine Alarm	114.40
27-1064-00	Vending Machine Alarm	114.40
27-1064-BAT	Replacement 12V Battery	18.65

© HAPP CONTROLS

LARGE STANDARD ROLL TOP SAFE

- Heavy duty 3/8" shackle plate
- Will accommodate "Puck" Style Padlock, see padlock page in Security section
- Large hopper opening 4-1/4" x 7-1/2"
- Large 12" x 12" x 21" Vault Size
- Physical Size: 12" x 12" x 27"
- Weight: 70 lbs, ship via UPS

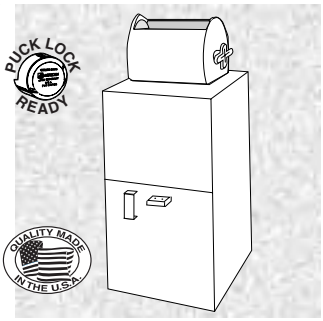

Part Number		Price per ea.
30-1470-00	Large Standard Roll Top Safe	356.00

LARGE STANDARD 2 COMPARTMENT SAFE

- Large bottom compartment for route driver to store filled changers and quickly exchange with the empty changers on location
- Will accommodate "Puck" Style Padlock, see padlock page in Security section
- Driver can access spare change on bottom without having access to the collected money deposited in the top compartment
- Extra heavy duty 3/8" thick locking plate
- Physical size: 15" x 15" x 34"
- Upper vault size: 15" x 15" x 14"
- Lower vault size: 15" x 15" x 10-1/2"
- Extra large hopper opening: 12" x 6"
- Weight: 120 lbs, ships via UPS

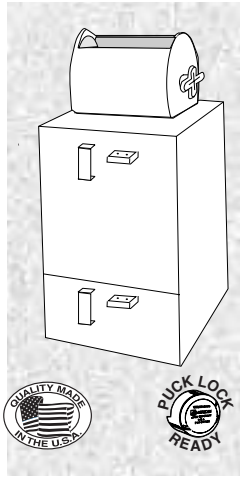

Part Number		Price per ea.
30-0106-00	Large Standard 2 Compartment Safe	356.00

GIANT CAPACITY ROLL TOP SAFE

- Heavy duty 3/8" shackle plate
- Will accommodate "Puck" Style Padlock, see padlock page in Security section
- Equipped for 2 padlocks (Sold Separately)
- Large hopper opening 12" x 6"
- Maximum security with 1/4" thick door
- Extra Large 18" x 18" x 23" Vault Size
- Physical Size: 18" x 18" x 32-1/4"
- Weight: 127 lbs, ship via UPS

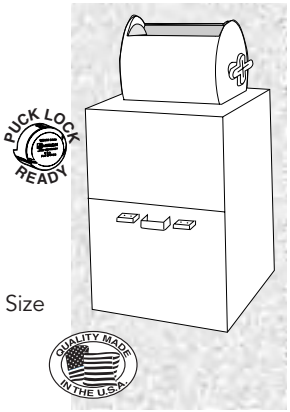

Part Number		Price per ea.
30-1475-00	Giant Capacity Roll Top Safe	407.00

MEDIUM STANDARD ROLL TOP SAFE

- Roll top opening size 4-1/4" x 7-1/2"
- Physical Size: 10" x 10" x 11"
- Heavy 10 gauge steel construction
- Extra heavy duty 3/8" shackle plate
- Compact size
- Weight: 46 lbs, ship via UPS

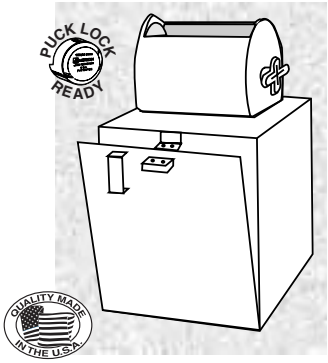

Part Number		Price per ea.
30-0078-00	Medium Standard Roll Top Safe	284.60

LARGE DELUXE ROLL TOP SAFE

- Roll top opening size 4-1/4" x 7-1/2"
- Large 12" x 12" x 21" Vault Size
- Heavy duty back up plate
- Heavy 10 gauge steel construction
- Physical Size: 12" x 12" x 27"
- Double deadbolt locking system
- Weight: 74 lbs, ships via UPS

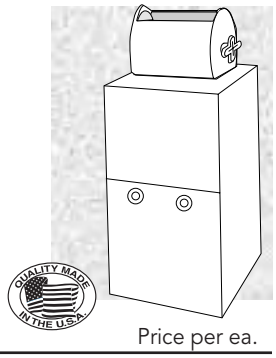

Part Number		Price per ea.
30-0077-00	Large Deluxe Roll Top Safe	511.95

MEDIUM DELUXE ROLL TOP SAFE

- Roll top opening size 4-1/4" x 7-1/2"
- 10" x 10" x 11" Vault Size
- Heavy duty back up plate
- Heavy 10 gauge steel construction
- Physical Size: 10" x 10" x 18-1/2"
- Double deadbolt locking system
- Weight: approx. 46 lbs.
- Ship via UPS

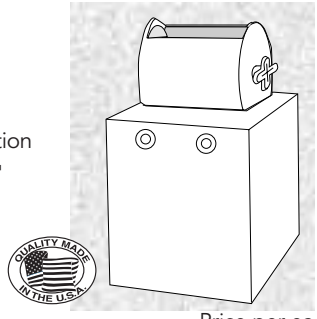

Part Number		Price per ea.
30-0079-00	Medium Deluxe Roll Top Safe	421.55

CUSTOM HASP ASSEMBLY FOR MEI VALIDATORS

- Custom designed for Mars AE & VN 2000 series validators
- Will only work with the compact bezel (bezel option no. 1) or fitted bezel (bezel option no. 5)
- Accommodates padlocks with 3/8" shackle

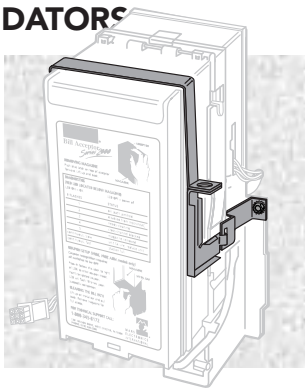

Part Number		Price per ea.
42-7112-00	Custom Hasp for MEI Validators	29.15

NATIONAL 222 REMOTE LOCKOUT DEVICE, BY LUTECH

- For use on National 222 Cigarette machine
- Lutech delivers the highest security in the prevention of minors from vending cigarettes
- Radio frequency remote control requires no wiring

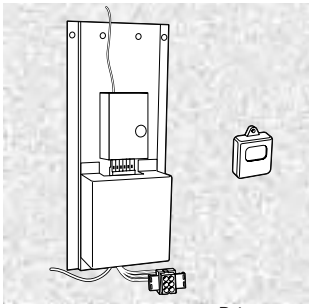

Part Number		Price per ea.
H0150N	Remote Lockout Device	130.05
30-0081-00	Hardwire Lockout Device	192.80
30-0118-00	Remote Only	38.65
49-6176-00	Replacement Battery for Remote	6.25

SLAM NUT ASSEMBLY

- Terrific time and labor saving device
- Allows you to simply 'slam' the T-Handle in after closing the door
- Eliminates screwing the T-Handle into the cage nut

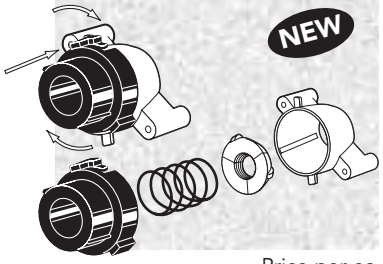

Part Number		Price per ea.
30-0120-00	Slam Nut Assembly	10.90

T-HANDLE

NEW

- Fits Chicago Lock and other T-Handles
- Can be used with studded or .25 turn T-Handle
- Will accept all standard inner cylinder locks
- Matte finish

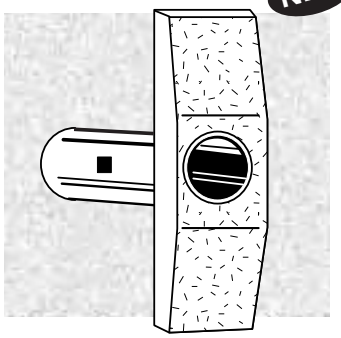

Part Number		Price per ea.
30-0183-00	T-Handle	3.90

T-HANDLE FLANGE

NEW

- Used with most T-Handles
- Can be used as studded or .25 turn T-Handle
- Polished chrome finish

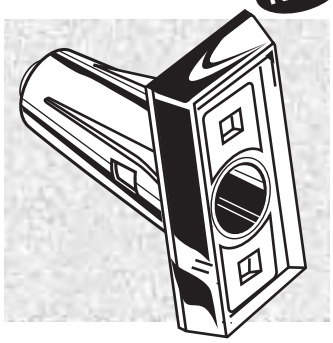

Part Number		Price per ea.
30-0182-00	T-Handle Flange	3.90

T-HANDLE ASSEMBLIES

- These T-Handle assemblies come complete with hardware
- Simply add inner cylinder lock

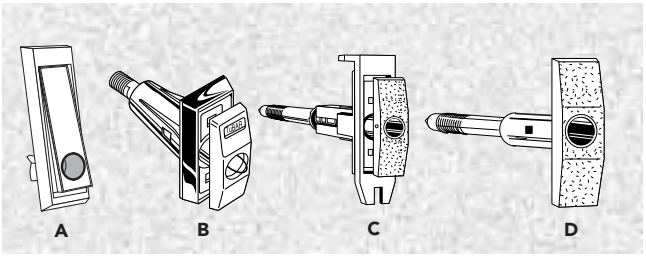

Part Number	Key #	Manufacturer	Price per ea.
H640089AP	A	Automatic Products	113.45
H80150287001DN	C	Dixie Narco	13.20
30-0195-00	D	Dixie Narco	6.75
H227RM	B	R.M.I.	24.80
H35027808R	B	Rowe, Bill Changer	61.55
30-0184-00	B	Rowe	13.95

Visit Our Web Site:
happcontrols.com
for **NEW** Product Updates!!

T-HANDLE KITS

- Inner Cylinder remains at or below the surface of the handle, making vandalism difficult.
- Accepts all standard Abloy, Ace, Ace Change-Matic, Flex-Ace, Duo, Gem, Medico and Happ Controls standard inner cylinder locks.
- To assemble a complete T-Handle, order parts 30-0184-00, 30-1817-00 and the threaded stud which fits your application from the list below.

Part Number		Price per ea.
30-0184-00	Includes: T-Flange, T-Handle	14.25
30-1817-00	Includes: E-Ring, Pop-Out Spring Hex Washer, Roll Pin	1.90

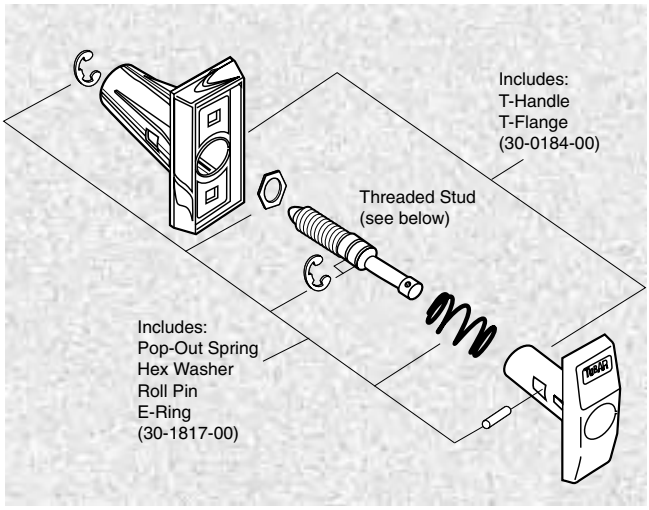

THREADED STUDS

- Used with Fort and other T-Handle Assemblies

Part Number	Key	Overall Length	Thread Length	Price per ea.
30-1835-00	A	2-3/4″	23/32″	4.70
30-1824-00	B	3-7/64″	13/16″	4.70
30-1838-00	C	3-1/8″	1-1/16″	4.70
30-1830-00	D	3-13/32″	1-3/16″	5.55
30-1836-00	E	3-7/8″	1-3/32″	5.55
30-1837-00	F	4-7/16″	1-3/16″	5.55
30-1831-00	G	6-1/2″	1-1/4″	5.55
30-1833-00	H	6-17/32″	2-1/2″	5.55

See chart for actual sizes

SIZE CHART FOR THREADED STUDS

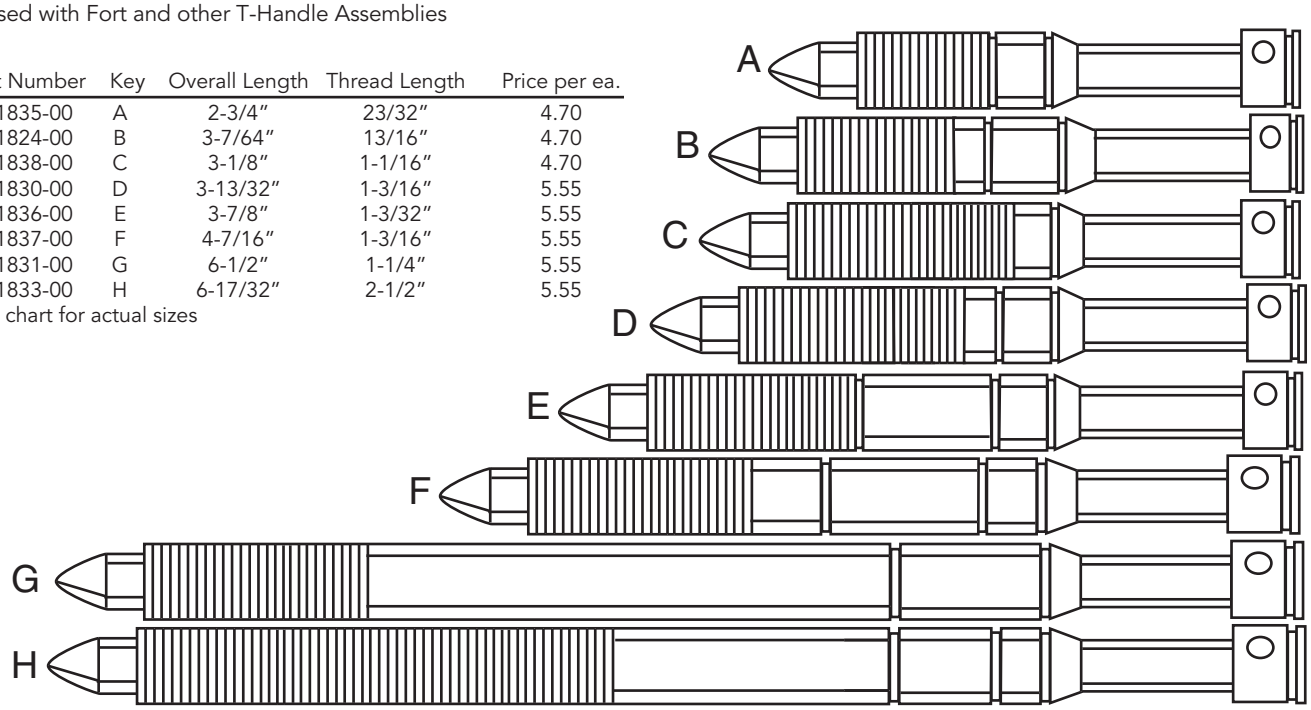

Visit Our Web Site:
happcontrols.com
for NEW Product Updates!!

1/3" CCD COLOR CAMERA

- The 1/3" DSP color camera provides SONY, true color images especially for CCTV and security applications.
- 1/3" interline transfer CCD image sensor
- Selectable ESC, BLC & Flickerless on/off switch
- Sync mode selection switch (internal / line lock)
- AC24V Type V. PHASE adjustment button
- DC12V Type R.B GAIN adjustment button
- Supports standard C/CD mount lens
- Operates on AC24V -+10% with internal lock
- Excellent picture quality
- Image Device: 1/4" SONY CCD
- TV Line: 480 TV Line
- Minimum Illumination: 0.5 LUX, F1.2
- S/N Ratio: Better Than 48 dB
- Auto Iris Lens: Video / DC
- Gamma: 0.45
- Lens Mount: C & CS mount
- Power Supply: AC24V
- Power Consumption: 110mA, 3.6W max
- Dimensions: 4.6"(L) x 2.25"(W) x 2.25"(H)

Part Number		Price per ea.
32-0638-00	1/3" CCD Color Camera	198.90

WEATHERPROOF VIDEO CAMERAS

- For applications that require the quality and performance offered by full size security cameras in an outdoor location but has space limitations
- Offers the high performance of full size cameras at a fraction of the size.
- The super tough metal design is very compact at only 6.9" x 3.5" x 5.1".
- 4.3mm lens
- Monochrome camera has 420 lines resolution while color camera has 380 lines of resolution at 0.15 lux
- Power requirements are 12 volts DC
- Fully adjustable mounting bracket for the perfect camera angle
- Built-on sun shade
- Includes pre-installed plug and play video cables and swivel mounting bracket

Part Number		Price per ea.
32-0627-00	Monochrome Weatherproof Video Camera	127.50
32-0625-00	Color Weatherproof Video Camera	175.45

1/3" CCD COLOR DAY/NIGHT CAMERA

- This camera reproduces a true color in any severe environment with using the highest sensitivity CCD and advanced technology of digital processing.
- High Resolution 380 TV Lines
- High Sensitivity with minimum illumination at 0.8
- Automatic Electronic Shutter - automatically adjusts the shutter speed according to the subject brightness.
- Monitor Out - image of view angle and focus can be adjusted easily in the vicinity of the camera by connecting with BNC of monitor out.
- Power line noise free - this function keeps the camera from interruption of 2000V
- LED power indicator
- Image Device: 1/3" CCD
- TV Line: 380TV Line
- Minimum Illumination: 0.8 LUX, F1.4
- S/N Ratio: Better Than 48 dB
- Auto Iris Lens: Video drive lens available
- Gamma: 0.45
- Lens Mount: C & CS mount
- Power Supply: AC24V
- Power Consumption: 50mA, 4W max
- Dimensions: 3.5"(L)x 2.25"(W) x 2"(H)

Part Number		Price per ea.
32-0637-00	1/3" CCD Color Day/Night Camera	224.40

1/3" CCD COLOR CAMERA

- High resolution and high sensitivity with 1/3" Panasonic CCD sensor and IC
- Electronic iris adjustment by automatic shutter speed control
- AGC (Automatic Gain Control)
- Accepts C or CS mount lens; lens sold separately
- Low light, high sensitivity: 0.92 LUX, F1.4
- Low power consumption: 220mA, 4.2W max
- Gamma: 0.45
- Auto iris lens: Video / DC
- S/N Ratio: better than 48dB
- 420 TV line
- Power supply: DC12V, AC24V
- Dimensions: 4.6" (L) x 2.24" (W) x 2.24" (H)

Part Number		Price per ea.
32-0645-00	1/3" CCD Color Camera	158.10

© HAPP CONTROLS

COLOR CAMERA WITH AUDIO

NEW

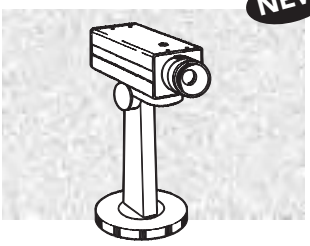

- Integrated lens CCD: 3.6mm F 2.0 fixed focus
- Resolution: 420 horizontal TV lines
- Signal / Noise ratio: 46 dB
- Power consumption: 1.3 watts
- Auto iris shutter: 1/60 – 1/100,000
- Image sensor: 1/3" Color CMOS
- Minimum illumination: 2 Lux
- Camera dimensions: 1-3/4" x 5-1/2" x 1-7/8"; with stand 8" x 5-1/2" x 3"
- Includes 60' of cable, 110 volt transformer and stand
- 6 per case

Part Number		Price per ea.
32-0687-00	Color Camera With Audio	203.00

BLACK/WHITE CAMERA WITH AUDIO

NEW

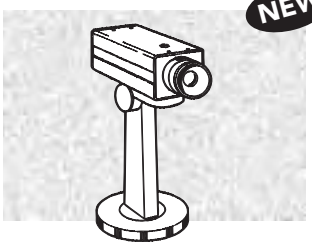

- Integrated lens CCD: 3.6mm F 2.0 fixed focus
- Resolution: 420 horizontal TV lines
- Signal / Noise ratio: 46 dB
- Auto iris shutter: 1/60 – 1/100,000
- Image sensor: 1/3" CCD
- Minimum illumination: 0.05 Lux
- Camera dimensions: 1-3/4" x 4" x 2-1/8"
- Includes 60' of cable, 110 volt transformer and stand
- 6 per case

Part Number		Price per ea.
32-0684-00	Black/White Camera With Audio	122.35

OUTDOOR MICRO-VIDEO CAMERAS

NEW

- Super small compared to other weatherproof cameras, only 0.89" x 1.95"
- Offers incredible features and performance
- Machined metal case is high quality and rugged
- Has an outstanding low light rating
- Stepless automatic electronic shutter handles very dim room light or bright outdoor applications with ease
- New image enhancing circuit automatically fine tunes and sharpens the picture.
- All camera control functions are automatic, ensuring great video in nearly any situation
- Built-in DC-DC converter enables the camera to maintain high quality video even when used with noisy power supplies or long cable runs
- Not designed for total immersion, but is extremely rugged to survive humid or outdoor environments
- Plug and play video and power cables are standard, as is a swivel mounting bracket
- Resolution: monochrome 420 lines; color 380 lines
- Field of view: monochrome 75 degrees; color 55 degrees
- 12 volts DC

Part Number		Price per ea.
32-0626-00	Weather Resistant Monochrome Micro-Video Camera	158.10
32-0624-00	Weatherproof Color Micro-Video Camera	239.70

WIRED MONOCHROME SMOKE DETECTOR CAMERA

NEW

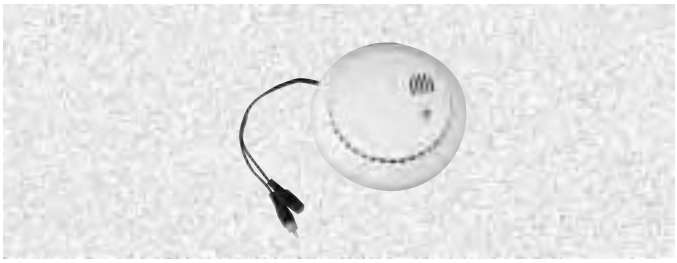

- Features the new 2.4 gigahertz FM synthesized technology for long range and solid video performance
- Wide angle monochrome camera is pointed down at a very strategic 30 degree oblique angle, which delivers a commanding view of most rooms
- Use the new MVR-3 super high gain receiver/antenna for up to 2500 feet plus range
- 410 lines of resolution
- FCC approved
- 9-15 volts DC, 110mA

Part Number		Price per ea.
32-0630-00	Wired Monochrome Smoke Detector Camera	158.10

12 VOLT DC POWER SUPPLY

NEW

- Regulated so it can be used with any of 12 volt camera as long as the cameras current draw does not exceed 500 mA

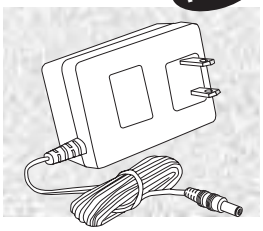

Part Number		Price per ea.
32-0629-00	12 Volt DC Power Supply	23.95

1/3" COLOR DOME CAMERA

NEW

- 1/3" SHARP color CCD
- Digital signal processing
- 1.0 LUX sensitivity at F1.2
- Mirror image available
- Black light compensation
- C/CS mount available
- Audio function
- Resolution: 330 TV lines
- Fixed lens
- Power: DC9V - DC14V
- Power consumption: 110mA (DC12V)
- Medium dome size: 4" W x 3.5" H
- Large dome size: 4.75" W x 4" H

MEDIUM DOME

LARGE DOME

Part Number		Price per ea.
32-0670-00	Medium Dome, Black	137.70
32-0669-00	Large Dome, Black	163.85
32-0671-00	Medium Dome, White	137.70
32-0668-00	Large Dome, White	137.70

INDOOR/OUTDOOR CAMERA HOUSINGS

NEW

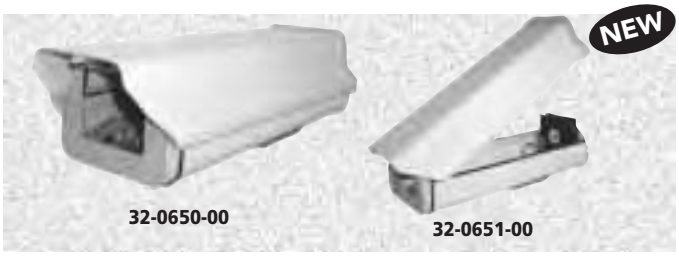

32-0650-00

32-0651-00

- Protects camera from inclement weather
- Built-in sunshield
- Aluminum construction
- Color: tan/beige
- Weight: approximately 5 lbs
- Easy installation
- 32-0651-00 has a built-in heater and blower

Part Number		Size	Price per ea.
32-0650-00	Camera Housing	5.59" x 4.53" x 9.05"	20.35
32-0651-00	Camera Housing (Built-In Heater)	5.59" x 4.53" x 9.05"	37.70

LENSES

NEW

- Varifocal, standard or board type available
- High quality and very economical

32-0652-00 32-0653-00 32-0654-00 32-0655-00 32-0656-00 32-0657-00 32-0658-00 32-0659-00

32-0660-00 32-0661-00 32-0662-00 32-0663-00 32-0664-00 32-0665-00 32-0666-00 32-0667-00

Part Number	Type	MM	Iris	Stop	Price per ea.
32-0652-00	Varifocal	3.5mm-8mm	Auto	F1.4	64.25
32-0653-00	Varifocal	2.8mm-10mm	Auto	F1.4	88.70
32-0654-00	Varifocal	5mm-50mm	Auto	F1.8	101.95
32-0655-00	Varifocal	3.5mm-8mm	Manual	F1.4	47.90
32-0656-00	Varifocal	5mm-50mm	Manual	F1.8	81.55
32-0657-00	Standard	2.5mm	None	ST2.5	17.30
32-0658-00	Standard	4mm	None	ST4	17.30
32-0659-00	Standard	6mm	None	ST6	17.30

Part Number	Type	MM	Iris	Stop	Price per ea.
32-0660-00	Standard	8mm	None	ST8	17.30
32-0661-00	Standard	12mm	None	ST12	17.30
32-0662-00	Standard	16mm	None	ST16	17.30
32-0663-00	Board	2.5mm (wide angle)	None	F1.4	13.25
32-0664-00	Board	4mm	None	F1.4	13.25
32-0665-00	Board	6mm	None	F1.4	13.25
32-0666-00	Board	8mm	None	F1.4	13.25
32-0667-00	Board	16mm	None	F1.4	13.25

© HAPP CONTROLS

CAMERA MOUNTS

NEW

32-0632-00 32-0635-00 32-0634-00 32-0636-00

Part Number	Mount Type	Construction	Swivel	Color	Length	Supports	Price per ea.
32-0632-00	Camera	Plastic	360°	Beige	7"	6 lbs	6.10
32-0635-00	Camera	Plastic	360°	Ivory	6"	6 lbs	5.90
32-0634-00	Housing	Aluminum	None	Gray	11"	25 lbs	10.15
32-0636-00	Housing	Aluminum	90°	Tan	9"	25 lbs	11.20

14" 8 CHANNEL COLOR MONITOR

NEW

- 8Ch 2 Page Quad Built-in
- Accepts NTSC, PAL video format
- On Screen Display
- Auto channel switching function
- Contrast, Brightness, Sharpness, Color, Tint
- 4 Audio Inputs
- 4 BNC input, 4 DIN (Mini-DIN) inputs
- Remote Controller
- Picture tube: 14" CRT
- Resolution: 380 TV Lines
- Video input: 4 BNC, 4 6pin-DIN
- Power consumption: 80W (Max)
- Power input: 100V-230V, 50/60Hz
- Size: 14.4"(W)x13.3"(H)x15.1"(D)
- Audio input: 4 RCA Input, -5dBu
- Audio output: 1.2 Watts
- Weight: 28.66 lbs.

Part Number		Price per ea.
32-0641-00	14" 8 Channel Color Monitor	535.50

14" HI-RESOLUTION COLOR MONITOR

NEW

- Exceptional high resolution
- Standard 75ogm, high impedance VIDEO input
- Y/C separated video input
- Contrast, Brightness, Sharpness, Color, Tint
- VCR output/input
- Audio input
- Picture Tube: 14" CRT
- Resolution: 380 TV Lines
- Video Input: Composite 1Vp-p
- Power Consumption: 60W (Max)
- Power Input: 100V-230V, 50/60Hz
- Dimensions: 14.4"(W)x 13.3"(H) x 15.1"(D)
- Audio Input: 1 Input, -5dBu
- Audio Output: 1.2 Watts
- Weight (Approx): 26.5 lbs

Part Number		Price per ea.
32-0639-00	14" Hi-Resolution Color Monitor	270.25

FUJI HQ VHS TAPE

NEW

- High quality multi-purpose videotape
- Ideal for everyday recordings
- T-160 HQ 8 hour tape

Part Number		Price per ea.	L/100
32-0551-00	Fuji T-160HQ VHS Tape	3.60	3.05

SONY V VHS TAPE

NEW

- Premium grade
- High durability
- Brilliant color and sound
- T-120 V 6 hour tape

Part Number		Price per ea.	L/100
32-0536-00	Sony T-120V VHS Tape	2.55	2.00

TDK REVUE VHS TAPE

NEW

- Premium grade
- Premium quality pictures with sharp clear colors
- Fast, smooth, anti-jam cassette operation
- Extra-durable for repeated recording and playback

Part Number		Price per ea.	L/100
32-0324-00	TDK T-120RV 6 Hour VHS Tape	3.05	2.50
32-0479-00	TDK T-160RV 8 Hour VHS Tape	3.55	3.05

VIDEO CASSETTE RECORDERS

- Field counter on screen
- Real time 30H REC/PB (NTSC EP, PAL LP mode)
- Linear Audio (up to 30H)
- Wireless remote control (Optional)
- Camera switching pulse
- 31 days battery back-up
- Flexible timer recording
- Universal Power - the VCR has wide range power input that requires no manual switching: AC90-240V, 50/60Hz
- Multiple OSD Language (English / French / Spanish /German / Italian)
- Alarm Record; Series Record; Go to Zero; Alarm recall; Alarm search
- Power fail recall
- Low energy consumption (approx. 17w)
- Mic record (AUDIO)

Tape Format	VHS
Video Recording System	4 Rotary Heads, Azimuth Helical Scanning System
Luminance Signal	FM Recording
Color Signal	Color Subvarrier Phase Shift Recording
REC/PB Mode	NTSC SP L2, L14, L26, 48, 72, 120, 168, 240, 480, 960 EP L6, L18, L30, 48, 72, 120, 168, 240, 480, 960 PAL SP L3, L15, L27, 48, 72, 120, 168, 240, 480, 960 LP L6, L30, 48, 72, 120, 168, 240, 480, 960
Horizontal Resolution	More than 320 lines (B/W) More than 280 lines (Color)
Signal to Noise Ratio	Video 43dB Audio 42dB
Video Input	1.0Vp/p, 75 Ohm BNC-F jack
Video Output	1.0Vp/p, 75 Ohm BNC-F jack
Audio Input	-8dBm, 47K Ohm, RCA Pin jack
Audio Output	-6dBm, 1K Ohm, RCA Pin jack
Alarm Recording Time	Up to L30H
Elapsed Use Time	Up to 9,999 hours max
Timer Programs	8 Programs
Battery Backup	31 Days
Remote in	Wired / Wireless (Optional)
Power Source	AC 90-240V 50/60Hz
Power Consumption	Approx. 17Watts
Operating Temperature	41F ~ 104F (5C ~ 40C)
Relative Humidity	Max. 80%
Dimensions	14.17"W x 3.7"H x 10.63"D
Weight	7.71 lbs.

Part Number		Price per ea.
32-0646-00	Video Cassette Recorder (Up To 30 Hours Real-time 6/13/30)	382.50
32-0647-00	Video Cassette Recorder (Up To 30 Hours Real-time, 960 Hours Time-lapse)	407.00

4 OR 8 CHANNEL SWITCHER

- Automatic or manual Audio/Video sequential switcher designed for programming signals from several different input Audio/Video signals.
- Automatic sequential switching function, variable dwell time from 1 to 35 seconds.
- Video Input: 1.0Vp-p adjustable, 75 ohm
- Video Output: BNCX2, composite video 1.0 Vp-p, 75 Ohms
- Video Format: EIA or CCIR Mono Video signal NTSC or PAL color video signal
- Auto Scan Time: 1 sec to 35 sec
- Power input: 110 VAC or 230 VAC
- Power Consumption: 3W max. 300mA
- Dimension 11"(W) x 7.5"(D) x 2.16"(H)
- Weight: 4.4 lbs

Part Number		Price per ea.
32-0644-00	4 Channel Switcher	96.85
32-0643-00	8 Channel Switcher	112.15

4 CHANNEL COLOR QUAD

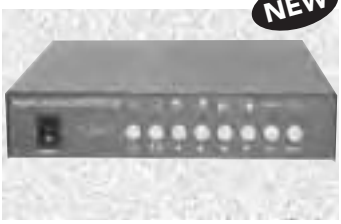

- 4Ch Color Quad / Picture In Picture PlayBack /Zoom
- Real Time Quad Display
- Full / Quad / PIP / POP / Multi-Screen Display Mode
- Programmable MENU in OSD
- Alarm Status Record
- Buzzer for Alarm In/Out
- Event Record in Alarm & Video Loss
- Picture Capture
- Power On / Video Loss Record Display
- Digital 2X Zoom in VCR Play Back Mode
- Auto Sequential
- Inputs: Video Input: 4 BNC, VCR Input: BNC
- Outputs: Monitor Output: BNC, VCR Output: BNC
- Alarm: 4 Ch individual On/Off, OSD Display & Buzzer Time Zone Selectable, Alarm Even Record Display till 30 list, Alarm Out
- Video Loss: OSD Display & Buzzer, Video Loss Out
- OSD Display: Camera ID, Time/Date Display
- Zoom: 2X Zoom Mode VCR Play Back
- Picture Capture: Up to 8 pictures record
- Power On Event: Power On Event Record Display
- Remote Control: RS-232C Connection (Option)
- Power Supply: DC 5V, 2A
- Dimension: 7.87"(W) x 1.69"(H) x 6.10"(D)
- Weight: 1.76 lbs

Part Number		Price per ea.
32-0642-00	4 Channel Color Quad	280.50

© HAPP CONTROLS

9 CHANNEL MULTIPLEXER WITH DIGITAL ZOOM

NEW

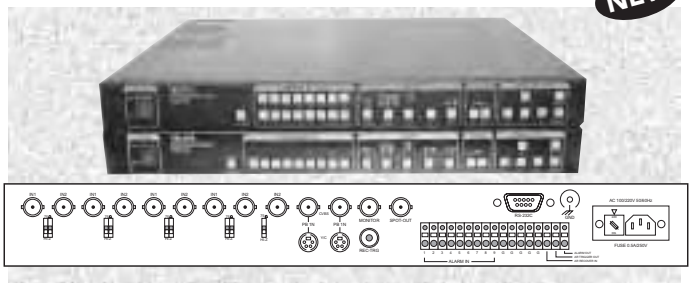

- NTSC/PAL Compatible
- Full Digital Processing
- Duplex Function
- Fast Frame Rate
- Recording Channel Select
- Zoom and Pan Functions
- Freeze Function
- Motion Detect Function
- Spot-out Output
- Image Control
- Auto Switching Function
- Alarm I/O Function
- Alarm List Function
- Remote Control Function
- Storing the Settings

Specifications:	
Signal System:	NTSC, PAL
Input Signals: Camera Input:	9 Ch, 1V pp, 75 Ohm, BNC
Playback Input:	1V pp, 75 Ohm, BNC
Output Signals:	Monitor Output: 1 Ch 1V pp, 75 Ohm, BNC
REC Output:	1 Ch 1V pp, 75 Ohm, BNC
Spot-Out Output:	1 Ch 1V pp, 75 Ohm, BNC
Frame Rate: Monitor:	Single - 30fps, 4 split - 30fps, 9 split - 5fps
REC:	(60 / # of Ch) field / sec or (30 / # of Ch) frame / sec
Resolution:	NTSC: 720x480 PAL : 720 x 576
Alarm Inputs:	9 Inputs, over 60msec, Low Active TTL or POC Input
Alarm Recover Input:	1 Input, over 60msec, Low Active TTL or POC Input
Alarm Trigger Output:	100msec. Open Collector Low Active
Alarm Output:	~30min. Open Collector Low Active
Communication Control:	RS-232C, 9600 bps, DB-9 Female terminal
Alarm List Display:	Max 200. Time/Channel/Input signal/Motion detect
Screen Control:	Contrast, Brightness, Color Gain setting function
Standard Power Input:	AC100 / 220V Selection, 50 / 60 Hz
Power Consumption:	Max 25W
Operating Humidity:	10 - 80% RH
Operating Temperature:	0 - 40C
Dimension:	17"(W) x 1.75"(H) x 13.66"(D)
Weight:	10 lbs

Part Number		Price per ea.
32-0648-00	9 Channel Multiplexer With Digital Zoom	866.00

16 CHANNEL MULTIPLEXER WITH DIGITAL ZOOM AND LOOP OUT

NEW

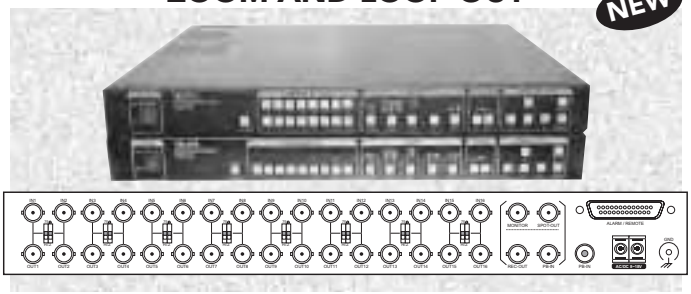

- NTSC/PAL Compatible
- Full Digital Processing
- Duplex Function
- Fast Frame Rate
- Recording Channel Select
- Zoom and Pan Functions
- Freeze Function
- Motion Detect Function
- Spot-out Output
- Image Control
- Auto Switching Function
- Alarm I/O Function
- Alarm List Function
- Remote Control Function
- Storing the Settings

Specifications:	
Signal System:	NTSC, PAL
Input Signals: Camera Input:	9 Ch, 1V pp, 75 Ohm, BNC
Playback Input:	1V pp, 75 Ohm, BNC
Output Signals:	Monitor Output: 1 Ch 1V pp, 75 Ohm, BNC
REC Output:	1 Ch 1V pp, 75 Ohm, BNC
Spot-Out Output:	1 Ch 1V pp, 75 Ohm, BNC
Frame Rate: Monitor:	Single - 30 4 split - 30 9 split 5 16 split - 3.75
REC:	(60 / # of Ch) field / sec or (30 / # of Ch) frame / sec
Resolution:	NTSC: 720x480 PAL : 720 x 576
Alarm Inputs:	16 Inputs, over 60msec, Low Active TTL or POC Input
Alarm Recover Input:	1 Input, over 60msec, Low Active TTL or POC Input
Alarm Trigger Output:	100msec. Open Collector Low Active
Alarm Output:	~30min. Open Collector Low Active
Communication Control:	RS-232C, 9600 bps, DB-9 Female terminal
Alarm List Display:	Max 200. Time/Channel/Input signal/Motion detect
Screen Control:	Contrast, Brightness, Color Gain setting function
Standard Power Input:	AC/DC 8~18V Adaptor
Power Consumption:	Max 25W
Operating Humidity:	10 - 80% RH
Operating Temperature:	0 - 40C
Dimension:	17"(W) x 1.75"(H) x 13.66"(D)
Weight:	10 lbs

Part Number		Price per ea.
32-0649-00	16 Channel Multiplexer With Digital Zoom	917.00

4 CHANNEL COLOR MULTIPLEXER WITH PICTURE IN PICTURE

NEW

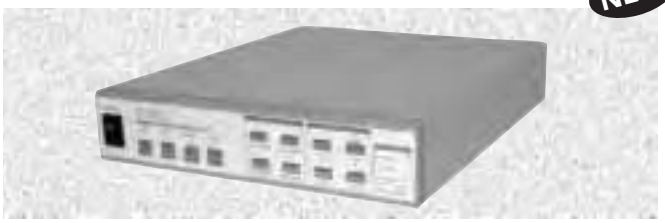

- Real Time Quad Display
- Full / Quad / PIP / POP / Multi-Screen Display Mode
- Programmable MENU in OSD
- Alarm Status Record
- Buzzer for Alarm In/Out
- Event Record in Alarm & Video Loss
- Picture Capture
- Power On / Video Loss Record Display
- Digital 2X Zoom in VCR Play Back Mode
- Auto Sequential
- Small Size: 8"(W) x 1.75"(H) x 6"(D)

Specifications:	
Signal System:	NTSC, PAL
Input Signals: Camera Input:	4 Ch, 1V pp, 75 Ohm, BNC
Playback Input:	1V pp, 75 Ohm, BNC
Output Signals:	Monitor Output: 1 Ch 1V pp, 75 Ohm, BNC
REC Output:	1 Ch 1V pp, 75 Ohm, BNC
Frame Rate: Monitor:	Single - 30fps, 4 split - 30fps
REC:	(60 / # of Ch) field / sec or (30 / # of Ch) frame / sec
Resolution:	NTSC: 720x480 PAL : 720 x 576
Alarm Inputs:	4 Inputs
Alarm Output:	Open Collector
Screen Control:	Contrast, Brightness, Color Gain setting function
Standard Power Input:	DC 5V, 2A
Power Consumption:	Max 25W
Operating Humidity:	10 - 80% RH
Operating Temperature:	0 - 40C
Dimension:	8"(W) x 1.75"(H) x 6"(D)
Weight:	10 lbs

Part Number		Price per ea.
32-0640-00	4 Channel Color Multiplexer	611.00

24 VOLT AC POWER SUPPLY

NEW

- Powers 24 Volt AC cameras

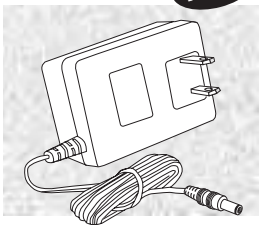

Part Number		Price per ea.
32-0628-00	24 Volt AC Power Supply	30.55

COMPLETE COLOR CAMERA SYSTEM

NEW

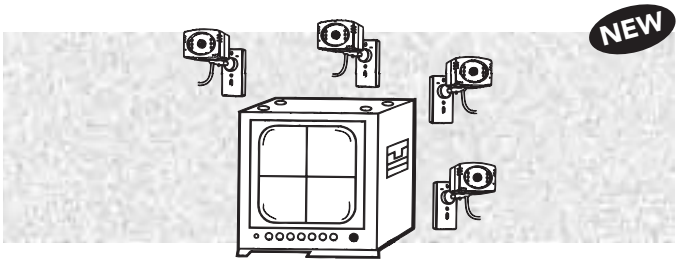

- View up to 4 locations simultaneously in real time
- 14" Color monitor with 380 lines of resolution, 2-20 second switching time, 2 video outputs and alarm function
- Monitor mode selections include
  -One location full screen
  -Four locations on one screen
  -Zoom, enlarge and close-up
  -Picture-in-picture
- Four 1/3" cameras with 2.0 fixed focus, 3.8mm lens, 450 lines of resolution, 0.2 lux min. illumination, 1/60-1/15000 auto iris shutter
- VCR hookup for recording video and audio
- On screen date, time and camera location
- Complete system includes:
  -Large 14" color quad processor
  -4 cameras
  -60 ft of cable
- Power supply: 17V / 1550Ma

Part Number		Price per ea.
32-0673-00	Complete Color Camera System	995.00

COMPLETE BLACK & WHITE CAMERA SYSTEM

NEW

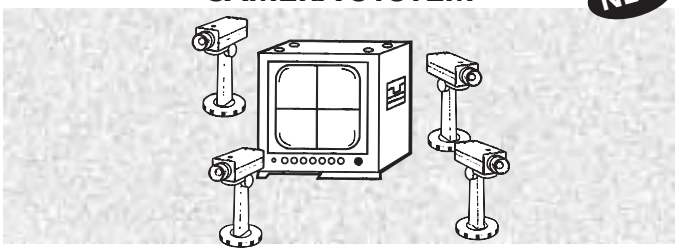

- View up to 4 locations simultaneously in real time
- 14" B/W monitor with 380 lines of resolution, 2-20 second switching time, 2 video outputs and alarm function
- Monitor mode selections include
  -One location full screen
  -Four locations on one screen
  -Zoom, enlarge and close-up
  -Picture-in-picture
- Four 1/3" cameras with 2.0 fixed focus, 4.0mm lens, 450 lines of resolution, 0.2 lux min. illumination, 1/60-1/15000 auto iris shutter
- VCR hookup for recording audio and video
- On screen date, time and camera location
- Audio input
- Power supply: 17V / 1500Ma
- Complete system includes:
  -Large 14" black and white quad processor
  -4 cameras
  -60 ft of cable

Part Number		Price per ea.
32-0672-00	Complete Black & White Camera System	499.00

© HAPP CONTROLS

KODICOM 1800 SERIES DIGITAL VIDEO MANAGEMENT SYSTEM

NEW

- 4, 8 or 16 channels
- Up to 30 images per second processing
- Motion/Alarm/Continuous recording allows for weeks of storage
- Simultaneous recording and playback
- Digital watermark
- Printer hardcopy/JPG/BMP to diskette
- Call (spot) monitor output
- LAN, WAN and dial-up connectivity (TCP/IP)
- Rack mount

GUARD SCREEN

- Multi-picture display
- Self-programmable 1,4,6,9,10,13,16 screen split
- Endless and synchronized recording
- Real time image surveillance
- Partial / whole picture enlargement
- Remote surveillance over LAN, internet or modem
- User defined motion detection
- Easy to use and operate graphical user interface

SEARCH SCREEN

- Direct and immediate search by date, time, camera and time line
- Intelligent search functions: playback, fast forward, backward, skip, slow motion, pause, frame-by-frame, zoom, image quality and brightness control
- View, save or print images
- External backup on 3.5" floppy disk or CD-RW

PAN/TILT SCREEN

- Pan/Tilt/Zoom and focus control of up to 16 PTZ cameras (RS-422 RX Receiver option)
- Zoom in / out, focus, power, light control and auto settings
- Remote PTZ and focus control via PSTN, ISDN, Internet and modem
- Quick and easy selection and operation of any PTZ camera connected to DVR

VIDEO INPUT
- Number of video input channels: 4
- Video input 1 Vpp, 75 Ohm typical
- Connector BNC
- Compression type proprietary (Engine-K)
- Resolutions 160 x 120, 320 x 240, 640 x 480
- Max. display and recording speed with 4 cameras: 30 & 20 images per second

VIDEO OUTPUT
- Main monitor VGA (1024 x 768)
- Connector (main monitor) DB-15 HD (SVGA)
- Call (spot) monitor 1 Vpp, 75 Ohm
- Connector (call monitor) RCA

AUDIO
- Recording and playback 1 channel (line or mic in, line out)
- Connectors 1/8" mini phone jacks

ALARM INPUTS AND OUTPUTS
- Number of inputs: 0 (non isolated for dry contact sensors & optional 4 inputs)
- Number of outputs: 0 (isolated with common return & optional 4 outputs)
- Connectors screwless terminal block

ELECTRICAL
- Power source 115-120 VAC; 50—60Hz switchable, maximum 300W

CONNECTIVITY
- LAN/WAN 10/100 Ethernet card
- Connector (LAN/WAN) RJ-45
- Connector (dial-up) DB-9 or telephone jack RJ-12

HARDWARE
- Platform PC based: Windows 98™ 2nd Edition
- Hard disk 1 internal 120 GB hard disk (upgradeable to 6 hard disks)
- CDRW & 1.44 MB Floppy drive
- Memory: 256 MB RAM

MECHANICAL
- Mounting 4U rack mount chassis
- Finish / black case/ steel

ENVIRONMENTAL
- Dimensions 483mm x 450mm x 177mm (W x D x H)
- Approx. weight 28.16kg (61.95 lb)
- Operating temperature 5° to 40°C, 41° to 104°F
- Operating humidity below 90% RH

WARRANTY
- Coverage period: 3 years parts and 1 year hard drive and & labor

Part Number		Price per ea.
32-0681-00	Kodicom 1804 4-Channel System	3,692.70
32-0680-00	Kodicom 1808 8-Channel System	4,202.96
32-0679-00	Kodicom 1816 16-Channel System	4,597.28

KODICOM 4400 SERIES VIDEO MANAGEMENT SYSTEM

- 4, 8 or 16 channels available
- Up to 120 images per second processing
- Motion/Alarm/Continuous recording allows for weeks of storage
- Simultaneous recording and playback
- Digital watermark
- Printer hardcopy/JPG/BMP to diskette
- Call (spot) monitor output
- LAN, WAN and dial-up connectivity (TCP/IP)
- Rack mount

GUARD SCREEN

- Multi-picture display
- Self-programmable 1,4,6,9,10,13,16 screen split
- Endless and synchronized recording
- Real time image surveillance
- Partial / whole picture enlargement
- Remote surveillance over LAN, internet or modem
- User defined motion detection
- Easy to use and operate graphical user interface

SEARCH SCREEN

- Direct and immediate search by date, time, camera and time line
- Intelligent search functions: playback, fast forward, backward, skip, slow motion, pause, frame-by-frame, zoom, image quality and brightness control
- View, save or print images
- External backup on 3.5" floppy disk or CD-RW

PAN/TILT SCREEN

- Pan/Tilt/Zoom and focus control of up to 16 PTZ cameras (RS-422 RX Receiver option)
- Zoom in / out, focus, power, light control and auto settings
- Remote PTZ and focus control via PSTN, ISDN, Internet and modem
- Quick and easy selection and operation of any PTZ camera connected to DVR

VIDEO INPUT

- Number of video input channels: 4
- Video input 1 Vpp, 75 Ohm typical
- Connector BNC
- Compression type proprietary (Engine-K)
- Resolutions 160 x 120, 320 x 240, 640 x 480
- Max. display and recording speed w/ 4 cameras: 120 & 120 images per second

VIDEO OUTPUT

- Main monitor VGA (1024 x 768)
- Connector (main monitor) DB-15 HD (SVGA)
- Call (spot) monitor 1 Vpp, 75 Ohm
- Connector (call monitor) RCA
- AUDIO
- Recording and playback 1 channel (line or mic in, line out)
- Connectors 1/8" mini phone jacks

ALARM INPUTS AND OUTPUTS

- Number of inputs: 0 (non isolated for dry contact sensors & optional 4 inputs)
- Number of outputs: 0 (isolated with common return & optional 4 outputs)
- Connectors screwless terminal block

CONNECTIVITY

- LAN/WAN 10/100 Ethernet card
- Connector (LAN/WAN) RJ-45
- Connector (dial-up) DB-9 or telephone jack RJ-12

HARDWARE

- Platform PC based: Windows 2000 Pro™ or 98™ 2nd Edition
- Hard disk 1 internal 120 GB hard disk (upgradeable to 6 hard disks)
- CDRW & 1.44 MB Floppy drive
- Memory: 256 MB RAM

ELECTRICAL

- Power source 115-120 VAC; 50—60Hz switchable, maximum 300W

MECHANICAL

- Mounting 4U rack mount chassis
- Finish / black case / steel

ENVIRONMENTAL

- Dimensions 483mm x 450mm x 177mm (W x D x H)
- Approx. weight 28.16kg (61.95 lb)
- Operating temperature 5° to 40°C, 41° to 104°F
- Operating humidity below 90% RH

WARRANTY

Coverage period: 3 years parts and 1 year hard drive & labor

Part Number		Price per ea.
32-0678-00	Kodicom 4404 4-Channel System	5,661.92
32-0677-00	Kodicom 4408 8-Channel System	5,903.75
32-0676-00	Kodicom 4416 16-Channel System	6,356.48

© HAPP CONTROLS

KODICOM 3416 DIGITAL VIDEO MANAGEMENT SYSTEM

- 16 channels
- Up to 480 images per second processing
- Motion/Alarm/Continuous recording allows for weeks of storage
- Simultaneous recording and playback
- Digital watermark
- Printer hardcopy/JPG/BMP to diskette
- Call (spot) monitor output
- 8 alarm inputs and outputs (16 Optional)
- LAN, WAN and dial-up connectivity (TCP/IP)
- Rack mount
- Integrated with PTZ control

GUARD SCREEN

- Multi-picture display
- Self-programmable 1,4,6,9,10,13,16 screen split
- Endless and synchronized recording
- Real time image surveillance
- Partial / whole picture enlargement
- Remote surveillance over LAN, internet or modem
- User defined motion detection
- Easy to use and operate graphical user interface

SEARCH SCREEN

- Direct and immediate search by date, time, camera and time line
- Intelligent search functions: playback, fast forward, backward, skip, slow motion, pause, frame-by-frame, zoom, image quality and brightness control
- View, save or print images
- External backup on 3.5" floppy disk or CD-RW

PAN/TILT SCREEN

- Pan/Tilt/Zoom and focus control of up to 16 PTZ cameras (RS-422 RX Receiver option)
- Zoom in / out, focus, power, light control and auto settings
- Remote PTZ and focus control via PSTN, ISDN, Internet and modem
- Quick and easy selection and operation of any PTZ camera connected to DVR

VIDEO INPUT
- Number of video input channels: 16
- Video input 1 Vpp, 75 Ohm typical
- Connector BNC
- Compression type proprietary (Engine-K)
- Resolutions 160 x 120, 320 x 240, 640 x 480
- Max. display 480 images per sec and recording speed 80 – 60 images per second

VIDEO OUTPUT
- Main monitor VGA (1024 x 768)
- Connector (main monitor) DB-15 HD (SVGA)
- Call (spot) monitor 1 Vpp, 75 Ohm
- Connector (call monitor) RCA

AUDIO
- Recording and playback 1 channel (line or mic in, line out) – Optional 8 audio channels
- Connectors 1/8" mini phone jacks

ALARM INPUTS AND OUTPUTS
- Number of inputs: 8 (non isolated for dry contact sensors & optional 16 inputs)
- Number of outputs: 8 (isolated with common return & optional 16 outputs)
- Connectors screwless terminal block

CONNECTIVITY
- LAN/WAN 10/100 Ethernet card
- Connector (LAN/WAN) RJ-45
- Connector (dial-up) DB-9 or telephone jack RJ-12

HARDWARE
- Platform PC based: Windows 2000 Pro™ or 98™ 2nd Edition
- Hard disk 1 internal 120 GB hard disk (upgradeable to 6 hard disks)
- CDRW & 1.44 MB Floppy drive
- Memory: 256 MB RAM

ELECTRICAL
- Power source 115-120 VAC; 50—60Hz switchable, maximum 300W

MECHANICAL
- Mounting 4U rack mount chassis
- Finish / black case / steel

ENVIRONMENTAL
- Dimensions 483mm x 450mm x 177mm (W x D x H)
- Approx. weight 28.16kg (61.95 lb)
- Operating temperature 5° to 40°C, 41° to 104°F
- Operating humidity below 90% RH

WARRANTY
- Coverage period: 3 years parts and 1 year hard drive & labor

Part Number		Price per ea.
32-0675-00	Kodicom 3416 System	7,992.53

KODICOM 44216 DIGITAL VIDEO MANAGEMENT SYSTEM

- 16 channels
- Up to 240 images per second processing
- Motion/Alarm/Continuous recording allows for weeks of storage
- Simultaneous recording and playback
- Digital watermark
- Printer hardcopy/JPG/BMP to diskette
- Call (spot) monitor output
- 8 alarm inputs and outputs (16 Optional)
- LAN, WAN and dial-up connectivity (TCP/IP)
- Rack mount
- Integrated with PTZ control

GUARD SCREEN

- Multi-picture display
- Self-programmable 1,4,6,9,10,13,16 screen split
- Endless and synchronized recording
- Real time image surveillance
- Partial / whole picture enlargement
- Remote surveillance over LAN, internet or modem
- User defined motion detection
- Easy to use and operate graphical user interface

SEARCH SCREEN

- Direct and immediate search by date, time, camera and time line
- Intelligent search functions: playback, fast forward, backward, skip, slow motion, pause, frame-by-frame, zoom, image quality and brightness control
- View, save or print images
- External backup on 3.5" floppy disk or CD-RW

PAN/TILT SCREEN

- Pan/Tilt/Zoom and focus control of up to 16 PTZ cameras (RS-422 RX Receiver option)
- Zoom in / out, focus, power, light control and auto settings
- Remote PTZ and focus control via PSTN, ISDN, Internet and modem
- Quick and easy selection and operation of any PTZ camera connected to DVR

VIDEO INPUT
- Number of video input channels: 16
- Video input 1 Vpp, 75 Ohm typical
- Connector BNC
- Compression type proprietary (Engine-K)
- Resolutions 160 x 120, 320 x 240, 640 x 480
- Max. display 240 images per sec & recording speed 160 - images per second

VIDEO OUTPUT
- Main monitor VGA (1024 x 768)
- Connector (main monitor) DB-15 HD (SVGA)
- Call (spot) monitor 1 Vpp, 75 Ohm
- Connector (call monitor) BNC

AUDIO
- Recording and playback 1 channel (line or mic in, line out) – Optional 8 audio channels
- Connectors 1/8" mini phone jacks

ALARM INPUTS AND OUTPUTS
- Number of inputs: 8 (non isolated for dry contact sensors & optional 16 inputs)
- Number of outputs: 8 (isolated with common return & optional 16 outputs)
- Connectors screwless terminal block

CONNECTIVITY
- LAN/WAN 10/100 Ethernet card
- Connector (LAN/WAN) RJ-45
- Connector (dial-up) DB-9 or telephone jack RJ-12

HARDWARE
- Platform PC based: Windows 2000 Pro™ or 98™ 2nd Edition
- Hard disk 1 internal 120 GB hard disk (upgradeable to 6 hard disks)
- CDRW & 1.44 MB Floppy drive
- Memory: 256 MB RAM

ELECTRICAL
- Power source 115-120 VAC; 50—60Hz switchable, maximum 300W

MECHANICAL
- Mounting 4U rack mount chassis
- Finish / black case / steel

ENVIRONMENTAL
- Dimensions 483mm x 450mm x 177mm (W x D x H)
- Approx. weight 28.16kg (61.95 lb)
- Operating temperature 5° to 40°C, 41° to 104°F
- Operating humidity below 90% RH

WARRANTY
- Coverage period: 3 years parts and 1 year hard drive & labor

Part Number		Price per ea.
32-0674-00	Kodicom 44216 Digital Video Management System	8,468.50

© HAPP CONTROLS

KODICOM 34216 DIGITAL VIDEO RECORDING SYSTEM

NEW

- 16 channels
- Up to 480 images per second processing
- Continuous recording allows weeks of storage
- Simultaneous recording and playback
- Digital watermark
- Printer hardcopy/JPEG/BMP to diskette
- Call (spot) monitor output
- LAN, WAN and dial-up connectivity (via TCP/IP)
- Compact design
- Web security (optional)

GUARD SCREEN

- Multi-picture display
- Self-programmable 1,4,6,9,10,13,16 screen split
- Endless and synchronized recording
- Real time image surveillance
- Partial / whole picture enlargement
- Remote surveillance over LAN, internet or modem
- User defined motion detection
- Easy to use and operate graphical user interface

SEARCH SCREEN

- Direct and immediate search by date, time, camera and time line
- Intelligent search functions: playback, fast forward, backward, skip, slow motion, pause, frame-by-frame, zoom, image quality and brightness control
- View, save or print images
- External backup on 3.5" floppy disk or CD-RW

PAN/TILT SCREEN

- Pan/Tilt/Zoom and focus control of up to 16 PTZ cameras (RS-422 RX Receiver option)
- Zoom in / out, focus, power, light control and auto settings
- Remote PTZ and focus control via PSTN, ISDN, Internet and modem
- Quick and easy selection and operation of any PTZ camera connected to DVR

VIDEO INPUT
- 16 video input channels
- Video input 1VPP, 75 OHM typical
- Connector for BNC
- Proprietary compression (engine-K)
- Resolutions 160x120, 320x240, 640x480
- Maximum display 16 cameras 480 fps
- Maximum recording 8 cameras (160x120 and 320x240=240fps) (640x480=120fps)
- Maximum recording 9-16 cameras (160x120 and 320x240=210fps) (640x480=100fps)

VIDEO OUTPUT
- Main monitor VGA (1024x768)
- Connector type DB-15 HD (SVGA)
- Call (spot) monitor 1Vpp, 75 OHM
- Connector (call monitor) RCA

AUDIO
- Recording and playback 1 channel (line or mic and, line out)
- Connectors are 1/8" mini phone jacks
- Alarm Inputs and Outputs
- Number of inputs & outputs: 8 (non isolated for dry contact sensors & optional 16 inputs)
- Connectors is a screwless, terminal block

CONNECTIVITY
- LAN / WAN 10/100 Ethernet card
- Connector (LAN/WAN) RJ-45
- Connector (dial-up) DB-9 or telephone jack RJ-12

HARDWARE
- PC based, windows 98™ and windows 2000™ optional
- Internal 120 GB hard disk drive (upgradeable to 3 hard disks)
- CDRW & 1.44 MB floppy drive
- Pentium IV at 1.8 GHZ, 128 MB RAM

ELECTRICAL
- Power source 115-120 VAC; 50-60 HZ switchable, maximum 300W

MECHANICAL
- Rack mount design
- Black steel case

ENVIRONMENTAL
- Dimensions are 440mm wide x 452 mm deep x 175 mm high or (17.32"x17.8 "x6.89")
- Approx. weight is 40lbs or 18.18 kg
- Operating Temperature is 5° to 40°C, 41° to 104°F
- Operating Humidity below 90% RH

WARRANTY
- Coverage provided is 3 years for parts and 1 year for hard drive & labor

VIDEO STANDARDS
- NTSC/EIA is standard, while PAL CCIR is available upon request Kodicom
- Part 34216 Rack Mount Chassis

Part Number		Price per ea.
32-0682-00	Kodicom 34216 Digital Video Recording System	10,405.01

MAGLINER Route Distribution Solutions HAND TRUCKS

MAGLINER Route Distribution Solutions GEMINI JR. & SR. HAND TRUCKS

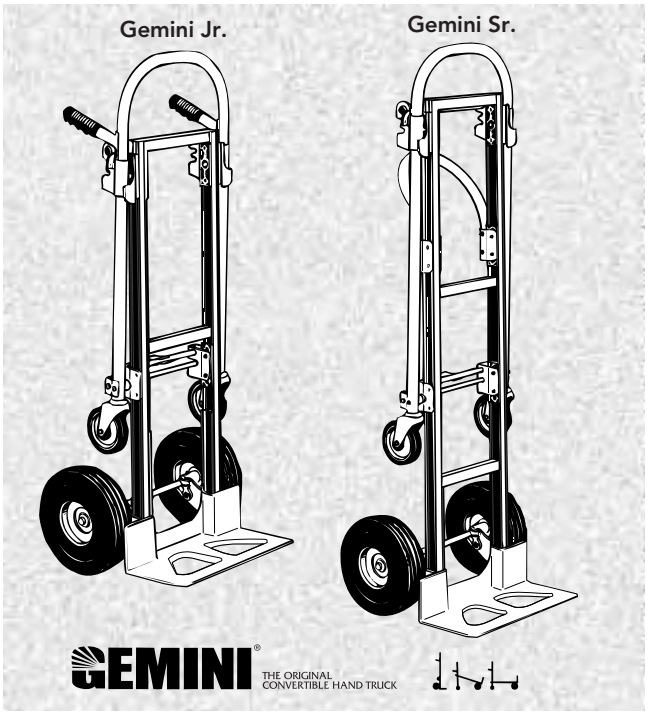

Specifications MAGLINER Route Distribution Solutions	Gemini Jr. Cat. No HTGK 1834	Gemini Sr. Cat. No. HTGK 9584
Overall width	21"	21"
Frame width	12"	12"
Height, as hand truck	51"	61"
Height, as platform truck	40"	45-1/8"
Platform bed length	38"	51"
Capacity, as hand truck	500 lbs.	500 lbs.
Capacity, as platform truck	1000 lbs.	1000 lbs.
Platform height from floor approx.	10-1/2"	10-1/2"
Hand truck wheels (full pneumatic or care free)	10 x 3.50	10 x 3.50
Casters – swivel	5" x 1-1/4"	5" x 1-1/4"
Nose casting	18" x 7-1/2"	18" x 7-1/2"
Shipping weight	44 lbs.	45 lbs.

- Lightweight, high strength aluminum construction, properly balanced to assure easier wheeling and positive load control.
- Big 10" full pneumatic tires provide smooth, easy rolling over all surfaces, indoor and outdoor
- 4 wheel truck for those large, bulky loads; easily converts to a 2 wheel cart for smaller stops
- In down position, an extra platform is provided for increased load capacity
- Extra wide, cast aluminum nose plate
- All parts are replaceable, no welding
- Heavy duty aluminum deck plate is a great addition so smaller packages don't fall through when the truck is expanded to 4 wheel

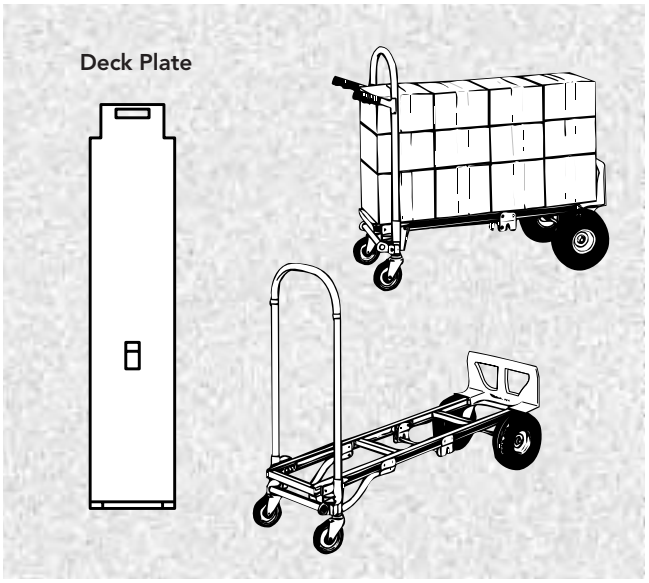

Part Number		Price per ea.
33-1000-00*	Gemini Jr. with Full Pneumatic Tire	335.70
33-1001-00	Gemini Sr. with Full Pneumatic Tire	356.95
33-1281-00	Gemini Sr. with Care Free Tire	356.95
33-1007-00	Deck Plate for Gemini Jr.	87.95
33-1008-00	Deck Plate for Gemini Sr.	87.95
33-1195-00	"New Style" Deck Plate for Gemini Jr. (43-1/2" Long for Trucks after 3/98)	86.75
33-1196-00	"New Style" Deck Plate for Gemini Sr. (56" Long for Trucks After 3/98)	87.95

* Stair Climbers can not be used on Gemini Jr.

GEMINI® THE ORIGINAL CONVERTIBLE HAND TRUCK

© HAPP CONTROLS

GEMINI JR. & SR. HAND TRUCK REPLACEMENT PARTS

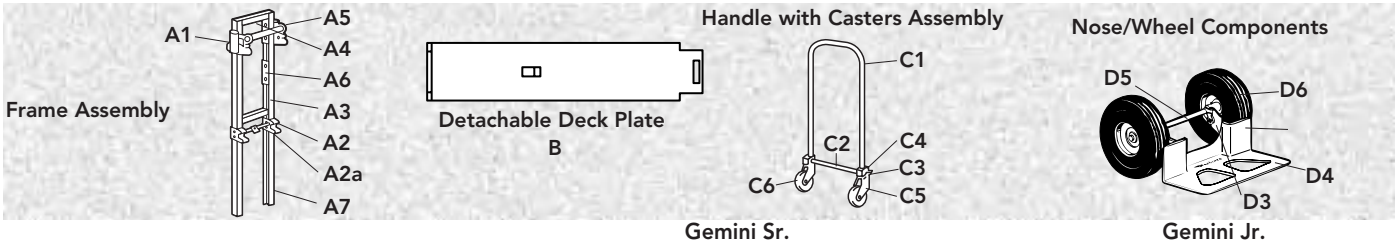

Item No.	Description	Gemini Sr. Part Number	Gemini Sr. Ref. #	Gemini Sr. Price per ea.	Gemini Jr. Part Number	Gemini Jr. Ref. #	Gemini Jr. Price per ea.
—	Frame Assy. Complete (A1 Thru A6)	33-1080-00	301150	209.60	33-1097-00	301151	194.95
A1	Pivot Socket & Locknut	33-1081-00	302015	14.30	33-1081-00	302015	14.30
A2	Handle Latch & Lock Assy.	33-1082-00	302016	53.00	33-1082-00	302016	53.00
A2a	Lock Pedal Only	33-1083-00	302043	2.20	33-1083-00	302043	2.20
A3	Frame Only With Cross Braces	33-1084-00	302055	68.80	33-1098-00	302059	56.65
A4	Upper Handle Assy. With Brackets	33-1085-00	302019	31.55	33-1085-00	302019	31.55
—	Upper Handle Cross Tube Only	33-1086-00	302060	6.25	33-1086-00	302060	6.25
A5	Filler Block-Pivot/Frame (2 Required)	33-1087-00	302021	5.90	33-1087-00	302021	5.90
A6	Frame Spacer (4 Reqd. On Jr.,6 On Sr.)	33-1088-00	302090	2.20	33-1088-00	302090	2.20
A7	Frame Reinforcement - Lower	33-1050-00	302001	3.85	33-1050-00	302001	3.85
—	Handle With Casters Assy. Complete	33-1089-00	301055	123.70	33-1099-00	301089	155.10
B	Detachable Deck Plate	33-1008-00	302185	87.95	33-1007-00	302188	87.95
C1	Handle Only	33-1090-00	301056	41.35	N.A.	N.A.	N.A.
C1a	Handle With 2 Single Grips	N.A.	N.A.	N.A.	33-1100-00	301059	72.70
—	Gemini Jr. Handle Assy.	N.A.	N.A.	N.A.	33-1102-00	301162	18.95
C2	Spreader Rod & Brackets Only	33-1091-00	301058	16.10	33-1091-00	301058	16.10
—	Snap Ring for Spreader Rod & Bracket	33-1252-00	221008	.22	33-1252-00	221008	.22
C3	Load Support Bolt & Locknut (2 Reqd.)	33-1092-00	301060	6.15	33-1092-00	301060	6.15
C4	Load Support Bolt Spacer (2 Reqd.)	33-1093-00	301061	4.40	33-1093-00	301061	4.40
C5	5" Caster Complete (2 Required)	33-1073-00	130010	28.95	33-1073-00	130010	28.95
—	5" Caster Brake	33-1228-00	51010	7.50	33-1228-00	51010	7.50
C6	5" Wheel Only (Older W/3/8" Axle)	33-1095-00	130011	14.45	33-1095-00	130011	14.45
—	Right Hand Wheel Bracket Only	33-1030-00	210100	6.25	33-1030-00	210100	6.25
D3	Left Hand Wheel Bracket Only	33-1031-00	210101	6.05	33-1031-00	210101	6.05
D4	'U' Aluminum Nose Plate	33-1022-00	300201	45.30	33-1022-00	300201	45.30
—	'U' Magnesium Nose Plate	33-1027-00	300205	52.50	33-1027-00	300205	52.50
—	'U' Magnesium Nose Plate, Die Cast	33-1108-00	300199	58.50	33-1108-00	300199	58.50
D5	Axle Kit #4025	33-1042-00	224025	8.20	33-1042-00	224025	8.20
D6	1025 Semi-Pneumatic Wheel	33-1034-00	111025	30.20	33-1034-00	111025	30.20
—	1030 Wheel	33-1109-00	101030	30.50	33-1109-00	101030	30.50
—	1035 Wheel	33-1035-00	121035	35.25	33-1035-00	121035	35.25
—	1040 Wheel	33-1036-00	121040	44.10	33-1036-00	121040	44.10
—	1045 Wheel	33-1037-00	121045	61.25	33-1037-00	121045	61.25
—	1010 Care Free Tire	33-1110-00	131010	63.85	33-1110-00	131010	63.85

Item No.	Description	Gemini Sr. Part Number	Gemini Sr. Ref. #	Gemini Sr. Price per ea.	Gemini Jr. Part Number	Gemini Jr. Ref. #	Gemini Jr. Price per ea.
E1	'U' Style Handle	33-1013-00	301000	15.75	N.A.	N.A.	N.A.
E1a	Double Handle With Grips	33-1078-00	301072	38.65	N.A.	N.A.	N.A.
—	Red Plastic Handle Grip Only	33-1019-00	301070	1.65	33-1019-00	301070	1.65
E1c	Single Handle With Grip	N.A.	N.A.	N.A.	33-1102-00	301162	18.95
E1d	Handle Mounting Bracket	33-1105-00	302062	5.20	N.A.	N.A.	N.A.
—	Nut for Handle Stop	33-1254-00	80674	.18	33-1254-00	80674	N.A.
—	Handle Stop	33-1251-00	302058	.93	N.A.	N.A.	N.A.
—	Screw for Handle Stop	33-1253-00	80167	.28	33-1253-00	80167	.28
—	Handle Bolt Pack (4) 1/4" X 1-3/4" Bolts	33-1106-00	80112	1.30	N.A.	N.A.	N.A.
—	Nuts & Lockwashers (4) 1/4"	33-1107-00	301033	.84	N.A.	N.A.	N.A.
—	C1 Stair Climbers	33-1047-00	86027	36.40	N.A.	N.A.	N.A.
—	C5 Stair Climbers	33-1048-00	86006	35.60	N.A.	N.A.	N.A.
F1	24" Folding Nose (Plate)	33-1055-00	301019	57.90	33-1055-00	301019	57.90
F2	20" Folding Nose (Channel)	33-1056-00	301025	47.00	33-1056-00	301025	47.00
F2	30" Folding Nose (Channel)	33-1057-00	301026	50.70	33-1057-00	301026	50.70

MAGLINER® 48" UTILITY HAND TRUCK

- Handles big loads easily
- Straight back frame
- 'U' Handle
- 14" x 7-1/2" nose plate
- 8" x 1-5/8" moldon rubber tires
- Load Capacity 500 lbs.
- Weight 18 lbs.
- Model 111-A-815

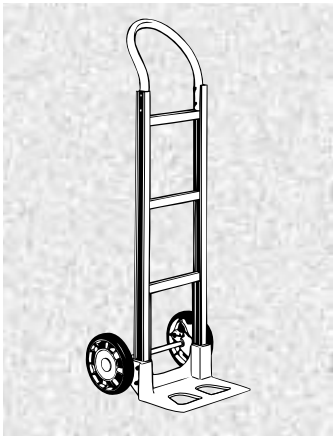

Part Number		Price per ea.
33-1061-00	48" Utility Hand Truck	144.55

MAGLINER® 50" UTILITY HAND TRUCK

- Beverage handlers favorite hand truck
- Straight back frame
- Single grip handle
- 18" x 7-1/2" nose plate
- 10" x 3-1/2" pneumatic tires
- Load Capacity 500 lbs.
- Weight 23 lbs.
- Model 117-U-1035

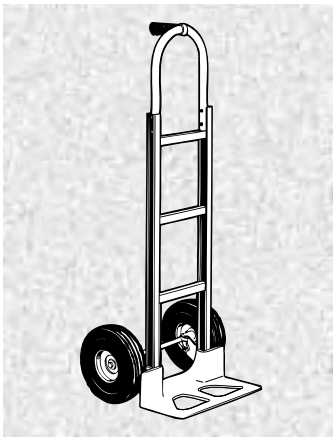

Part Number		Price per ea.
33-1064-00	50" Utility Hand Truck	186.70

MAGLINER® 48" ALL PURPOSE HAND TRUCK

- Route man's favorite hand truck
- Straight back frame
- "U" extension handle
- 14" x 7-1/2" nose plate
- 8" x 1-5/8" moldon rubber tires
- Load Capacity 500 lbs.
- Weight 26 lbs.
- Includes stair climbers
- Model 112-A-815-C5

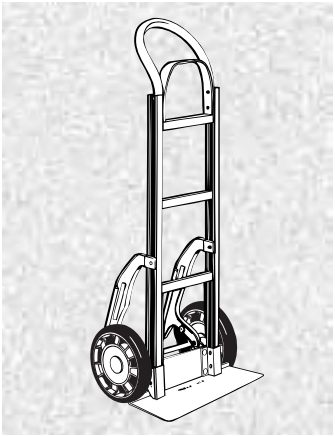

Part Number		Price per ea.
33-1065-00	48" All Purpose Hand Truck	180.70

MAGLINER® 52" DELUXE ALL PURPOSE HAND TRUCK

- Extra high 52" straight back frame allows stacking of extra supplies
- 'U' shaped handle
- 14" x 7-1/2" solid aluminum nose plate
- 10" x 3-1/2" pneumatic tires
- Includes C5 stair climbers
- Load Capacity 500 lbs.
- Weight 29 lbs.
- Model 112-D-1035-C5-52

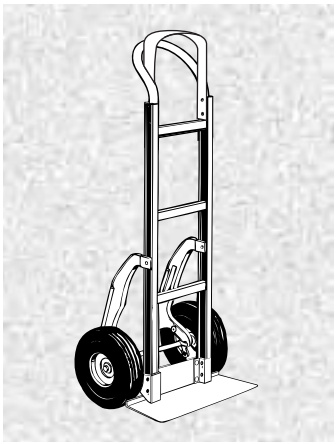

Part Number		Price per ea.
33-1165-00	52" Deluxe All Purpose Hand Truck	228.85

MAGLINER® 52" DELUXE TALL BOY HAND TRUCK

- Extra High 52" straight back frame allows stacking of extra supplies
- 'Vertical Loop' handle
- 18" x 7-1/2" aluminum nose plate
- 10" x 3-1/2" pneumatic tires
- Load Capacity 500 lbs.
- Weight 28 lbs.
- Model 115-U-1035

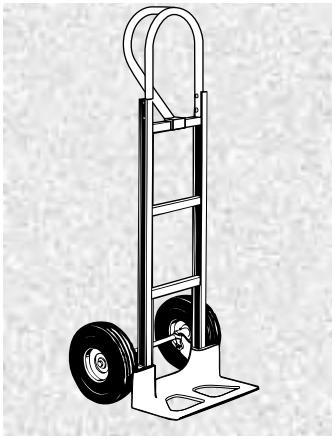

Part Number		Price per ea.
33-1076-00	52"Tall Boy Hand Truck	210.75

MAGLINER® BOTTLED WATER HAND TRUCK

- Allows you to easily transport four 5 gallon water bottles
- Comes with 4 folding, self-storing trays that permit the hand truck to be used for case goods, coolers and combinations of bottles and case goods
- With 10" pneumatic tires
- Comfort foam padding on a squared 'U' handle
- Extra large type 'H' nose plate
- Load Capacity 500 lbs.
- Weight 28 lbs.
- Bottles Not Included
- Model 124-H-1035-BW

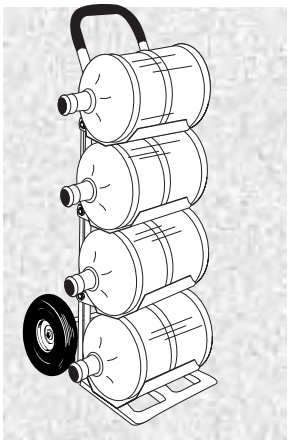

Part Number		Price per ea.
33-1229-00	Bottled Water Hand Truck	297.15

© HAPP CONTROLS

MAGLINER® SNACK FOOD TRUCK

- Great for cases of chips, pretzels, etc.
- 44" long nose extension increases the number of cases you can load
- Overall width: 17"
- Overall Height: 61.5"
- Load capacity with nose extended: 80 lbs
- Load capacity with nose folded: 500 lbs
- Weight: 28 lbs
- Model 811-A-815-F4

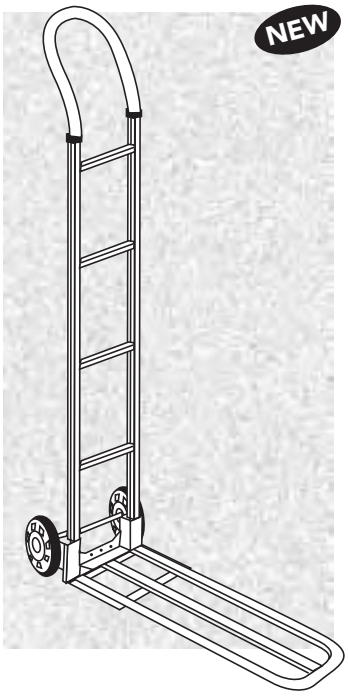

Part Number		Price per ea.
33-1224-00	Magliner Snack Food Truck	182.45

MAGLINER® 52" HAND TRUCK WITH 4th WHEEL ATTACHMENT

- Great for slot machines, small equipment, supplies, etc.
- Large type H nose plate - cast magnesium, 14" wide, 12" deep, recessed heel
- **Retractable 4th Wheel -** Retractable 5" caster wheels support load in incline position. Folds flush against frame when not in use.
- Extra high 52"straight back frame
- Vertical loop handle
- 10" X 3.5" pneumatic tires
- Load capacity 500 lbs
- Model 115-H-1010-WA

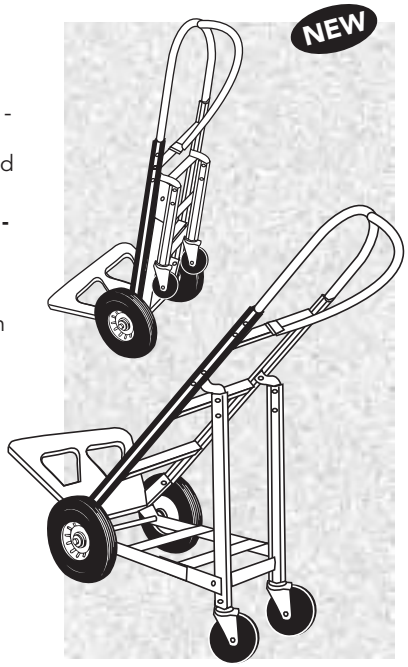

Part Number		Price per ea.
33-1257-00	Magliner 52" Hand Truck With 4th Wheel Attachment	355.05

MAGLINER® 55" HAND TRUCK WITH DRUM BRAKE

- Automotive style drum and pad brake system for superior braking
- Enclosed drums keep pads free of dirt, debris and grease
- Brakes can be easily activated with either hand
- 10" x 3.25" pneumatic tires
- Aluminum nose plate 16" x 12"
- Load capacity: 500 lbs.
- Model B30-D-1040

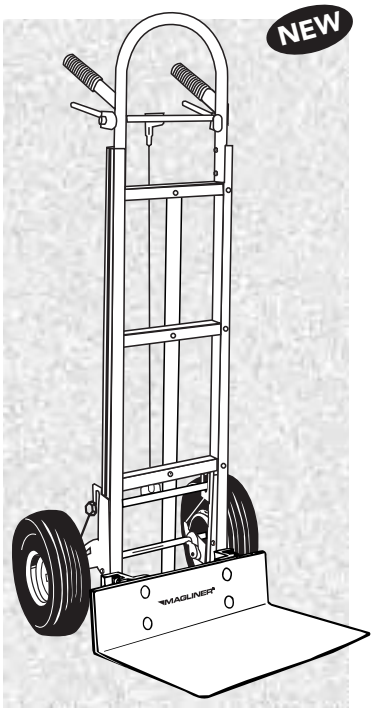

Part Number		Price per ea.
33-1221-00	Magliner 55" Hand Truck with Drum Brake	469.20

MAGLINER® FOLDING HANDTRUCK

- Lightweight aluminum reduces weight and provides maximum load capacity
- High-density molded side rail caps protect product
- Extended dimensions: 49" x 18.5" x 16"
- Folded dimensions: 28.5" x 18.5" x 10"
- Heavy duty extrusion rails and cross bars provide extra support and strength
- High performance 815 moldon rubber wheels provide the easiest rolling with minimum effort when pushing a loaded hand truck
- Suitable for vending routes, technicians, warehouse, office, and home
- Fits great in vans or the trunk of a car
- Capacity: 500 lbs.
- Model F11-C-815-LFN

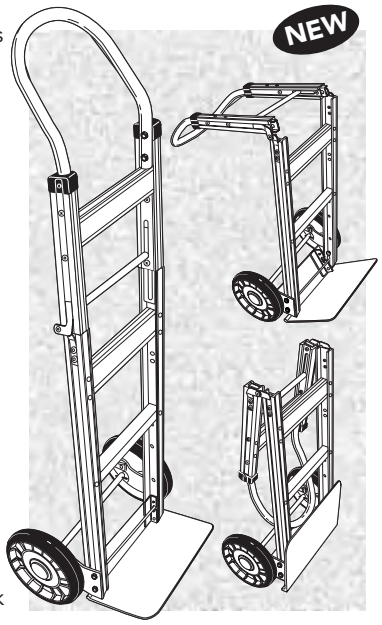

Part Number		Price per ea.
33-1232-00	Magliner Folding Handtruck	284.05

MAGLINER® Route Distribution Solutions ARISTOCRAT 4-WHEEL LUGGAGE TRUCK

- Strong, lightweight aluminum construction
- Built tough and strong to meet the high performance demands of the lodging industry
- Handles luggage, garment bags, packages, golf and tennis gear, etc.
- Features full width, non-marking rubber end bumpers, vinyl handgrips and soft-tread rubber wheels
- Durable nylon carpeted deck
- All parts are quickly and easily replaceable
- Requires little or no maintenance
- Specifications:
  - Size: 72" H x 18" W x 38" L
  - Deck Height: 8"
  - Casters: 5"
  - Capacity: 500 lbs.
  - Weight: 52 lbs.
- Model No. PTVK-5243

Part Number		Price per ea.
33-1210-00	Magliner Aristocrat 4-Wheel Luggage Truck	439.70

HAPP CONTROLS SELLS BRAND NAME QUALITY

© HAPP CONTROLS

MAGLINER® HAND TRUCK – HANDLES

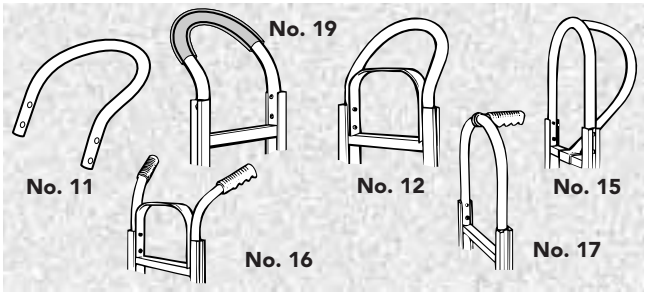

Part Number		Ref. No.	Price per ea.
33-1013-00	No. 11 Standard "U"	301000	15.75
33-1014-00	No. 19 Standard "U" with plastic sleeve	301008	24.10
33-1015-00	No. 12 Standard "U" w/"U" brace	30100	22.05
33-1016-00	No. 15 Vertical Loop fits frame No. 1 only	301002	35.60
33-1017-00	No. 16 Double Grip Complete w/ plastic grips & "U" brace	86031	24.45
33-1017-L	Left Handle with Grip for No. 16 Handle	40003	9.50
33-1017-R	Right Handle with Grip for No. 16 Handle	40002	9.50
33-1019-00	No. 5 Plastic Handle Grip only for No. 16 & 17 Handles	301070	1.65
33-1020-00	No. 17 Single Grip, high loop w/ plastic grip	301004	24.15

Note: Truck heights with handles 11, 19, 12 & 16 are 48" high.
Truck heights with handles 15 & 17 are 52" high.

MAGLINER® HAND TRUCK – WHEELS

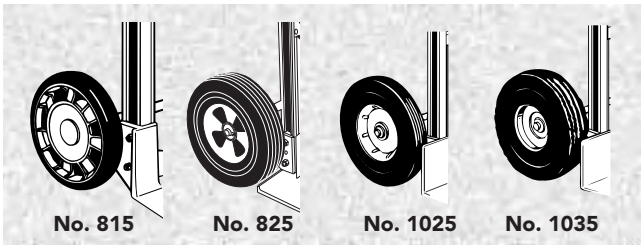

Part Number		Ref. No.	Price per ea.
33-1032-00	No. 815 – 8"x 1-5/8" w/ball bearings	10815	20.50
33-1033-00	No. 825 – 8"x 2-1/2" w/ball bearings	11825	29.60
33-1034-00	No. 1025 – 10 x 2-1/2" w/ball bearings	111025	30.20
33-1035-00	No. 1035 – 10"x 3-1/2" w/ball bearings	121035	35.25
33-1036-00	No. 1040 – 10"x 3-1/2" w/ball bearings	121040	44.10
33-1037-00	No. 1045 – 10"x 3-1/2" w/roller bearings	121045	61.25

MAGLINER® "CARE FREE" TIRE

- Maintenance free, will NEVER go flat!
- Micro-cellular polyurethane structure gives it an 'air cushioned' ride duplicating the feel and weight of pneumatic tires and the reliability of a solid tire.
- Improves productivity by eliminating tire related down time.
- Non marking 10" tire

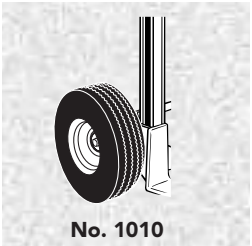

Part Number		Ref. No.	Price per ea.
33-1110-00	"Care Free" Tire 10" x 3-1/2" w/ball bearings	131010	63.85

MAGLINER® HAND TRUCK – FRAMES

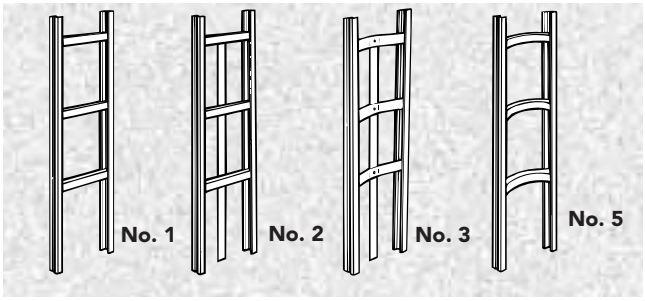

Part Number		Ref. No.	Price per ea.
33-1009-00	No. 1 Straight Back	300001	44.60
33-1010-00	No. 2 Lattice Back	300002	59.10
33-1011-00	No. 3 Curved back w/vertical strap	300003	77.20
33-1012-00	No. 5 Curved back	300021	72.30

MAGLINER® HAND TRUCK – NOSE PLATES

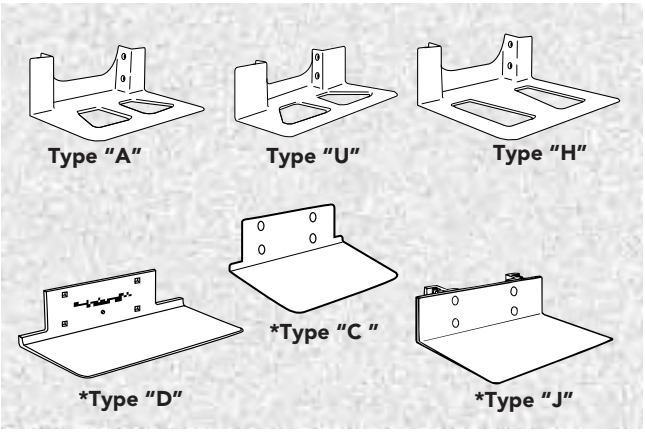

Part Number		Ref. No.	Price per ea.
33-1021-00	Type A – Magnesium	300200	32.60
33-1022-00	Type U – Magnesium	300201	45.30
33-1023-00*	Type C – Aluminum	300244	36.25
33-1024-00*	Type D – Aluminum	300245	42.25
33-1025-00*	Type J – Aluminum	300203	56.70
33-1028-00	Type H – Magnesium	300197	65.60
33-1029-00	Nose Plate Mounting Bracket Kit reversible for recessed flush mounting. For "C", "D" & "J" nose plate types only. Contains R & L brackets, nuts & bolts	86029	9.90
33-1030-00	Right hand axle and wheel mounting bracket. Used with all nose plates. Magnesium construction.	210100	6.25
33-1031-00	Left hand axle and wheel mounting bracket. Used with all nose plates. Magnesium construction.	210101	6.05
33-1248-00	Replacement cross brace kit for recessed folding nose plate	3024262	11.80

* Types C, D and J Require Mounting Bracket Kit, 33-1029-00

MAGLINER® Route Distribution Solutions

HAND TRUCK REPLACEMENT PARTS

HAND TRUCKS – ACCESSORIES

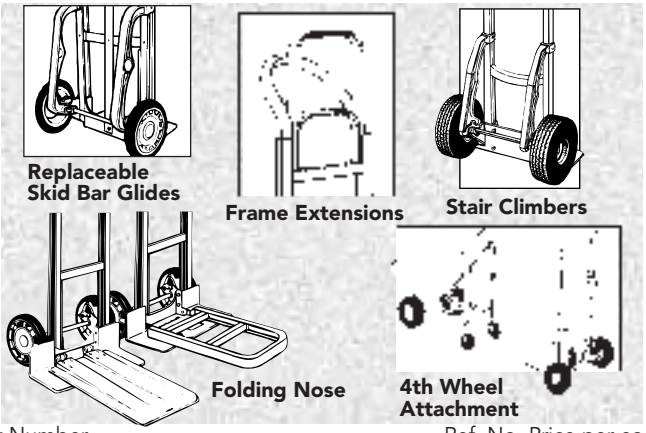

Part Number		Ref. No.	Price per ea.
33-1047-00	No. C1 Stair Climber Set, includes1 right & 1 left side to a set plus mounting hardware Magnesium Construction	86027	36.40
33-1048-00	No. C5 Stair Climber Set, includes 1 right & 1 left side to a set plus mounting hardware Magnesium Construction	86006	35.60
33-1049-00	Wear Strip for No. C5 Stair Climber	302115	3.95
33-1050-00	Side channel reinforcement for frames.Two (2) required	302001	3.85
33-1051-00	W4 Retractable 4th wheel attachment	301050	167.50
33-1052-00	No. 50 Hi "U" frame extension - 52"	40008	8.75
33-1242-00	No. 55 Hi "U" frame extension - 55"	40050	
33-1053-00	No. 60 Hi "U" frame extension - 60"	40010	20.00
33-1054-00	No. 68 Hi "U" frame extension - 68"	40011	24.15
33-1055-00	24" plate type folding nose extension	301019	57.90
33-1056-00	F2 20" extruded channel folding	301025	47.00
33-1057-00	F3 30" extruded channel folding nose extension*	301026	50.70
33-1070-00	44" Extruded channel folding nose extension	302147	85.40
33-1238-00	Caster for 4th wheel attachment	130056	13.70
33-1240-00	Hand Held Computer Accessory Bag	302680	21.40

• Will not fit J nose plates.

HARDWARE FASTENERS

Part Number		Ref. No.	Price per ea.
33-1044-00	No. 1 Fastener Pack for all models except with No. 815 wheels. Contains handle & nose bolts, nuts, axle cotter keys, roll pins & washers	301046	3.15
33-1045-00	No. 2 Fastener Pack for models with No. 815 wheels only. Contents same as pack No. 1 except with hub caps included	301047	4.65
33-1046-00	Handle Bolt Package. Used when No. 52, 60 or 68 Hi "U" Frame Extension is added. Contains (4)-1/4" – 20 x 2" bolts	80114	1.55

AXLE KITS

Part Number		Ref. No.	Price per ea.
33-1042-00	No. 4025 Axle Kit for all wheels except No. 815. Includes axle, cotter & roll pins	224025	8.20
33-1043-00	No. 4496 Axle Kit for No. 815 wheels only. Includes axle, cotter & roll pins	224996	8.80

WHEEL COMPONENTS

Part Number		Ref. No.	Price per ea.
33-1038-00	Wheel Ball Bearings for all wheels except No. 1045 wheel	18050	1.80
33-1039-00	No. 1045 Wheel Hub only with Bearings & Bolts	121045H	22.90
33-1040-00	No. 1035, 1040 & 1045 Tire only	151035	28.50
33-1041-00	No. 1035, 1040 & 1045 Tube only	121045T	11.45
33-1263-00	Ball Stud	302169	2.10

MAGLINER ACCESSORY BAG

NEW

- Great for supplies such as glass cleaner, towels, tools, etc.
- Attaches securely to back of hand truck
- Overall size: 16.5" L X 12" W
- 2 top pockets, 10" L X 6" W, sealed with Velcro
- 1 tool pocket 12" W X 3.5" D

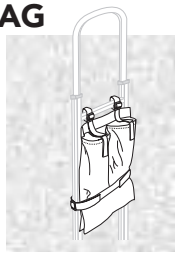

Part Number		Price per ea.
33-1211-00	Magliner Accessory Bag	28.75

CUSTOM DESIGN YOUR OWN MAGLINER® HAND TRUCK

- Custom build your hand truck to your personal needs
- Select the exact components you want to match your load handling requirements

Choose the frame, handle, nose, wheels and optional accessories that best fit your needs. Then follow the illustrated example below to determine the hand truck . That's all there is to it! Your new hand truck or trucks will arrive exactly as you've specified them.

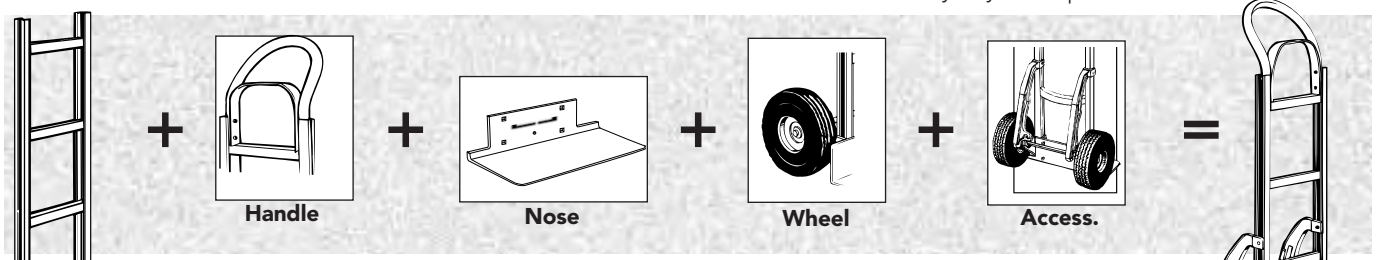

Miscellaneous items needed to complete your custom hand truck.:

1. Fastener pack, either #1 (33-1044-00) or #2 (33-1045-00)
2. Axle kit, either #4025 (33-1042-00) or #4496 (33-1043-00)
3. Mounting bracket for all nose plates, right hand axle and wheel (33-1030-00)
4. Mounting bracket for all nose plates, left hand axle and wheel (33-1031-00)
5. Mounting bracket for nose plate, only if "C", "D", or "J" nose plate is ordered (33-1029-00)
6. Side channel reinforcement for frames. Two required (33-1050-00)

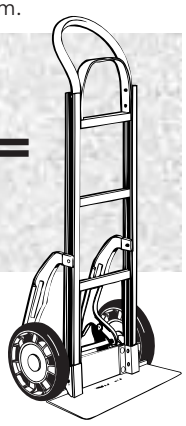

© HAPP CONTROLS

HAND TRUCKS

SRT-M SERIES HAND TRUCKS

- The all-steel SRT-M series trucks will take the toughest punishment and handle the heaviest loads with ease. They come with advanced features such as the Ratchet Strap Tightener with automatic recoil and the patented Roller Bearing Crawlers
- The SRT-M series is a steel truck with a load capacity of 1,200 lbs.
- Retractable 3-1/2" rear swivel caster assembly to support the load during operation
- 8" x 2" Front roller bearing rubber tires
- Each truck has one 3-ply, 2 piece 14' strap
- Padded protective felt helps insure your equipment will not get scratched during transport

Part Number	Description	Height	Weight	Price per ea.
33-0003-00	SRT-M-60	60"	81 lbs.	384.60
33-0000-00	SRT-M-66	66"	82 lbs.	388.80
33-0004-00	SRT-M-72	72"	85 lbs.	394.00

Parts and Accessories

		Price per ea.
33-1002-00	3-1/2" Swivel caster for SRT-M series trucks	14.75
33-1236-00	8" Wheel for SRT-m Series made after 9/97	24.35
33-1237-00	10" x 2-1/2" x 1" wheel for Vender Series	49.50
33-1203-00	10" x 2" Rear wheel for Vender series trucks	52.45
33-1063-00	Ratchet assy., 20-1/4" complete recoil w/o dog	39.40
33-1192-00	R-I-S Ratchet Assy. w/o dog	39.00
33-1066-00	Vend attachment kit for Vender series hand trucks	82.20
33-1068-00	Complete 14' two piece strap for all trucks	25.00
33-1113-00	SRT-M-72 Rubber and Felt Face Padding, set of 2 (For Trucks Manufactured Prior to 1991)	20.20
33-1117-00	SRT-M-72 Snaplok Vinyl & Felt Set (For Trucks Manufactured in 1991 and Later)	26.90
33-1122-00	Vender 78 Rubber and Felt Face Padding, set of 2	21.50
33-1079-00	5" x 2" Phenolic Wheels for Vender series trucks	17.10
33-1179-00	SRT-M-72 Complete Aluminum Crawler	28.20

78" DUTRO "BRUTE" HAND TRUCK

- Great for moving big heavy Can Drink machines
- 2 web belts with positive holding offset belt tightener
- Vertical frame is covered with a durable soft vinyl to protect your machine from scratches
- 1600 lb. load capacity

Part Number		Price per ea.
33-1205-00	78" Dutro "Brute" without Safety Brake	461.70
33-1205-01	78" Dutro "Brute" with Safety Brake	563.20

VENDER SERIES HAND TRUCKS

- The Vender series is an all-steel hand truck uniquely designed to handle the largest machines
- Equipped with a retractable wheel assembly with large 10" x 2" rear wheels that supports the load and makes going over bumps and rough terrain much safer and easier
- 5" x 2" Front roller bearing rubber tires
- The Vender series has a load capacity of 1,750 lbs.
- Equipped with two 3-ply, 2 piece 14' strap with automatic strap recoil
- Padded protective felt helps insure your equipment will not get scratched during transport

Part Number	Description	Height	Weight	Price per ea.
33-0005-00	Vender 72	72"	116 lbs.	492.90
33-0002-00	Vender 78	78"	118 lbs.	497.05
33-1120-00	Vender 84	84"	122 lbs.	501.90

72" DUTRO "BRAWNY BRUTE" HAND TRUCK

- Great for moving big heavy Can Drink machines
- "L-Shaped" ratchet arm makes leveraging large loads easy. Grabs the top front of the machine and pulls back
- Large rear wheels allow easy travel over rough terrain
- Safety brake allows you to rest load on incline
- Vertical frame is covered with a durable soft vinyl to protect your machine from scratches
- 1600 lb. load capacity

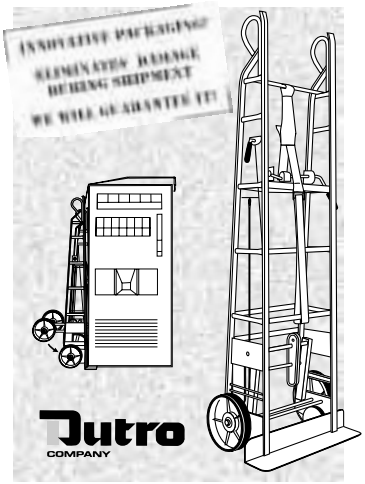

Part Number		Price per ea.
33-1167-00	72" Dutro "Brawny Brute" Hand Truck	513.20

Dutro COMPANY Parts and Accessories

Part Number		Price per ea.
33-1193-00	5" Wheel for "Brawny Brute"	16.90
33-1194-00	10" Wheel for "Brawny Brute"	46.95
33-1167-01	Overhead Swing Arm with Strap	63.90
33-1199-00	Upright Rubber Bumper	8.50
33-1200-00	Cross Rubber Bumper	3.70
33-1243-00	Ratchet Gear	9.40
33-1214-00	Small Wheel Axle	8.50
33-1250-00	Connector Yoke	4.40
33-1273-00	Offset Handle, 78" Brute	14.95
33-1279-00	Strap for Offset Handle	15.10
33-1272-00	Large Wheel Assembly	64.55

LECTRO TRUCK STAIR CLIMBING SYSTEM

Model Shown 33-1189-00

Lectro Truck is a total stair climbing, lifting and moving system.

By combining a battery powered high torque motor and an aircraft hardened steel screw drive, the patented Lectro Truck lifts and lowers loads relative to the wheels. This innovative material handling device enables one person – with literally the push of a button – to lift, control and safely move loads weighing up to 1500 pounds. Lectro Truck easily moves vending machines, safes, water heaters, boilers and other heavy bulky loads from trucks and docks or up and down stairs. Lectro Truck is also as portable as a standard hand truck.

Lectro Truck's Superior Features:

- Safety overload circuit breakers
- All-weather, marine safety switches
- Protective, anti-slip rubber pads on toe plate guard surfaces from damages
- Powerful, high-torque, orbital gear reduction motor
- Two strong, fully height and load adjustable strap bars
- Auxiliary charging system
- High-efficiency, specially hardened, aircraft type drive screw
- Heavy-duty construction for confident commercial or industrial application
- Totally sealed, maintenance-free, heavy-duty battery
- Enclosed and grommeted wiring system for added durability and safety
- Heavy-duty ball bearing drive system
- Roller bearing, non-marring, wide tread wheels, with auto type grease fittings
- Fully automatic, electro-magnetic braking system
- Security keyed safety switch protects against unauthorized use
- Heavy-duty leverage bar can be used to help tilt back and secure heavy loads
- Proven reliability– manufactured since 1971 from the original patented design
- Double-strapping system ensures a more balanced, secure load
- Warranty: 3 years on the motor and 1 year on the entire unit
- Drop shipped FOB Wisconsin

Lectro-Truck Model 1260E

- Heavy-duty steel construction
- 1,500 lb. load capacity with Electro Magnetic fully automatic braking mechanism
- 63" overall height with a vertical lifting height that will allow loading and unloading in trucks and vans to a maximum of 39"
- Built in hook bar for greater breaking back leverage
- Toe plate: 24" wide by 6" deep
- Weighs 185 lbs.
- Includes 1 LT battery, 2 adjustable strap bars and operating manual

Lectro-Truck Model 1268E

- Heavy-duty steel construction
- Great for moving vending machines
- 1,500 lb. load capacity with Electro Magnetic fully automatic braking mechanism
- 70.5" overall height with a vertical lifting height that moves loads up or down stairs, on and off trucks and vans, to a maximum height of 39"
- Built in hook bar for greater breaking back leverage
- Toe plate: 30" wide by 6" deep
- Weighs 190 lbs.
- Includes 1 LT battery, 2 adjustable strap bars and operating manual

Lectro-Truck Model LTA5512

- Aluminum alloy construction
- 1,200 lb. load capacity
- 67" overall height with a vertical lifting height of 41"
- Electro magnetic braking system
- Portable battery pack included
- Toe plate: 24" wide by 6" deep
- Weighs 110 lbs.
- Includes 1 LT battery, 2 adjustable strap bars, charging plug and operating manual

Lectro-Truck Model LTA6512

- Heavy-duty with a lighter weight aluminum alloy
- 1,500 lb. load capacity
- 68" overall height with a vertical lifting height of 41"
- Electro magnetic braking system
- Built-in tripod that folds in and out with the touch of your foot
- Built in extension handles provide additional leverage when needed
- Built in hook bar for greater breaking back leverage
- Toe plate: 30: wide by 6" deep
- Weighs 153 lbs.
- Includes 1 LT battery, 2 adjustable strap bars and owners operating manual

Model	Material	Height	Rating	Lift	Toe Plate	Hook Bar	Tripod	Extension Handles
1260E	Steel	63"	1500lbs	39"	6"x24"	Standard	Optional	N/A
1268E	Steel	70.5"	1500lbs	39"	6"x30"	Standard	Optional	N/A
5512E	Alum.	67"	1200lbs	41"	6"x24"	Optional	N/A	N/A
6512E	Alum.	68"	1500lbs	41"	6"x30"	Standard	Standard	Standard

Part Number		Price per ea.
33-1186-00	Lectro-Truck Model 1260E	3,553.05
33-1187-00	Lectro-Truck Model 1268E	3,679.50
33-1258-00	Replacement 6 amp Battery Charger	98.35

Part Number		Price per ea.
33-1188-00	Lectro-Truck Model LTA5512	3,414.50
33-1189-00	Lectro-Truck Model LTA6512	3,673.50

© HAPP CONTROLS

HEAVY-DUTY PINBALL CART

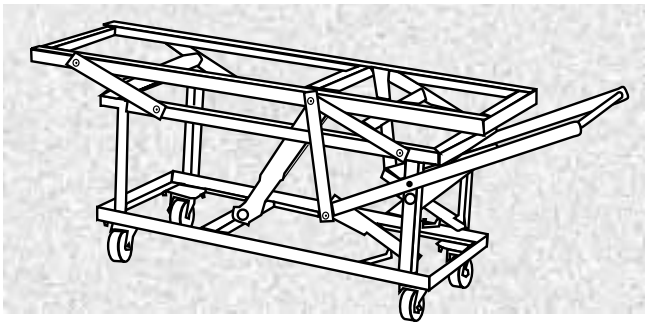

- Lower height design, to fit under all types of Pinball Machines
- Gas filled cylinder, will not leak when lift is placed upon it's side
- Wider pivot point to eliminate "wobble" when moving equipment
- High quality Nylon locking nuts provide ease of maintenance
- Durable MIG welded Canadian 1/8" steel
- 4 Heavy-duty swivel casters, 275 lbs. capacity each, individually replaceable
- Durable Black Powder Coated Surface
- Lift height: 26"
- Physical Size: 16" Wide x 4' long x 19.5" High
- Load Capacity: 600 lbs.
- Shipping Weight: 75 lbs
- This item has to be shipped by truck to avoid damage

Part Number		Price per ea.
33-1114-00	Heavy-Duty Pinball Cart	475.80
33-1180-00	3" Replacement Caster	12.05
33-1172-00	Replacement Shock Absorber	48.25

HEAVY DUTY WEB BELTS

- Heavy duty cotton belt will not scratch equipment
- 2" wide webbing
- Patented Roller Buckle
- Metal tip at other end
- Use as carrying strap or for tie-down purposes

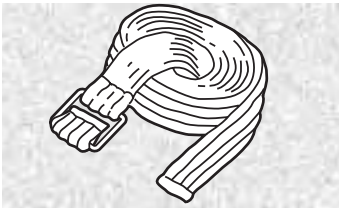

Part Number		Price per ea.	L/6
33-1169-00	15' Cotton Belt	22.85	21.70
33-1168-00	20' Cotton Belt	26.00	22.45

DUTRO COLLAPSIBLE HAND TRUCK

- Compact and lightweight
- Retractable handle and 15" fold-up nose plate
- Easily fits in trunk or front seat of car
- Great for toting large sample cases or tool cases
- Single fingertip control lever will increase or decrease overall height
- Capacity: 400 lbs.
- Toe Plate: 5" x 12" x 3/16"
- Width: 16.5"
- Height: 26" to 41"
- Weight: 26 lbs.
- Wheel: 5" x 2"
- Axle: 5/8"
- Model 904

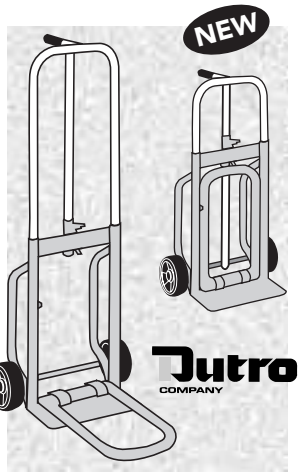

Part Number		Price per ea.
33-1197-00	Dutro Collapsible Hand Truck	115.60

DUNN TONNER TRUCK

- Easily allows one man to move heavy machines
- One step operation
- All welded steel frame
- High 2,000 lb. capacity
- Heavy duty casters
- Includes a set of 2 dollies and ratchet straps
- 44" high for better balance
- Toe plate: 23" x 3.75"
- UPS shippable

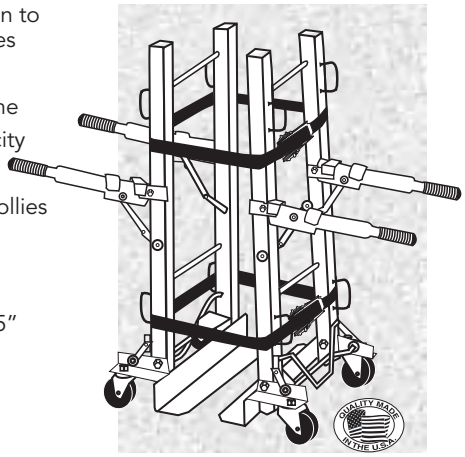

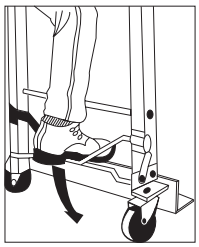

Simple Operation

To operate: Place one unit at each end of your product. Using ratchet straps, Connect the two units and tighten straps. Press the foot lever down into the locking position to raise Dunn-Tonners onto the heavy-duty wheels. Handles fold for ease of use and minimum storage space.

Part Number		Price per ea.
33-1220-00	Dunn Tonner Truck	447.35
33-1239-00	Replacement Ratchet Strap	10.35
33-1239-01	Replacement Caster, 3" x 1-3/4"	14.25

SUPERLITE FOLDING TRUCK

- Lightweight aluminum construction, weighs only 8.4 lbs.
- Easy pushbutton operation for quick set up
- Extended dimensions: 42" x 19" x 19"
- Folds to a compact 29.5" x 19" x 2" for easy transport and storage
- Superlite Folding Truck will fit into the smallest storage space or car trunk
- Noseplate: 19" wide x 12" deep
- Elastic straps for securing the load
- 7" x 1.5" non-marking, shock absorbing rubber tread wheels
- Suitable for technicians, arcades, routes, warehouse, office, and home
- Fits great in vans or the trunk of a car
- Capacity: 175 lbs.

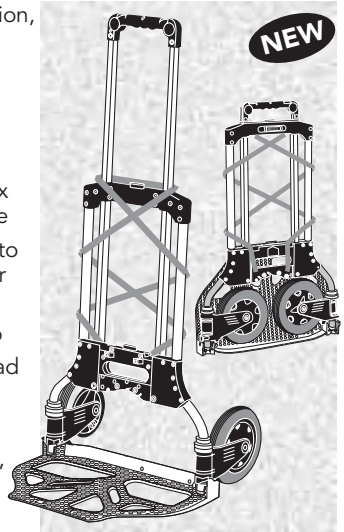

Part Number		Price per ea.
33-1244-00	Superlite Folding Truck	119.99

U-LIFT POOL TABLE MOVER

- Allows 1 person to easily move a pool table, air hockey or foosball table
- Reduces risk of back injury
- Heavy duty casters
- U.P.S. shippable

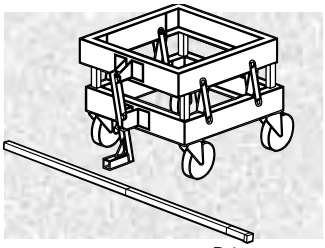

Part Number		Price per ea.
33-1005-00	U-Lift Pool Table Mover	240.90
33-1241-00	Replacement Handle Assy with Grip and Hardware	29.50

PROCART™ UTILITY CART

NEW

- The first "double-duty" utility cart
- Engineered to adapt to all the ways - and all the places - you work
- Flip its side gates down and the ProCart™ is a flat top cart - perfect for sliding boxes on and off the shelves in the warehouse
- Quickly flip the side gates up and it is a box top cart - use it to securely transport supplies
- Optional rail system and bins transform it into a customized, portable work center
- Made of high density polyethylene structural foam which is dent resistant, rust-proof and never needs painting
- Durable non-marking 5" wheels with locking rear wheels
- Each shelf holds a hefty 200 lbs.
- Quick assembly using a Phillips screwdriver

Part Number		Color	Size	Price per ea.
83-0099-00	Large ProCart™	Beige	45"L x24"W x32"H	204.00
83-0098-00	Large ProCart™	Gray	45"L x24"W x32"H	204.00
83-0100-00	Small ProCart™	Gray	40"L x19.5"W x32"H	173.40

DELUXE ALL-PURPOSE DOLLY

- Heavy duty 4" casters
- 18" wide x 30" long
- Rubber covering "grips" and "protects" items from moving or scratching
- Hard rock maple
- 1000 lb. load capacity
- Weighs 21 lbs.

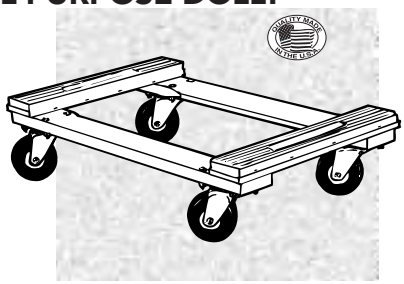

Part Number		Price per ea.
33-1801-00	Deluxe All-Purpose 4 Wheel Dolly	84.35
33-1126-00	Replacement Rubber End Caps	9.45
33-1140-00	Replacement 4" Caster	12.05

WOOD PLATFORM TRUCK

- 30" wide x 60" long wood platform
- 5" x 1-1/4" polyolean casters
- 2000 lb. load capacity
- Removable 1" steel tubing handle with 3 crossbars
- Must ship via truck

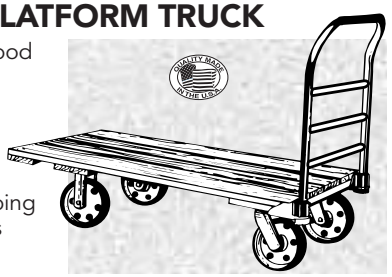

Part Number		Price per ea.
33-1067-00	Wood Platform Truck	278.65

EASY-LIFT POOL TABLE MOVER – NORTECH

- Designed to make moving pool tables, air hockey and foosball games easy for 1 person
- Reduces risk of back injury
- Lifts table 3"
- Extremely heavy duty 5" casters
- Weight 56 lbs.
- U.P.S. shippable

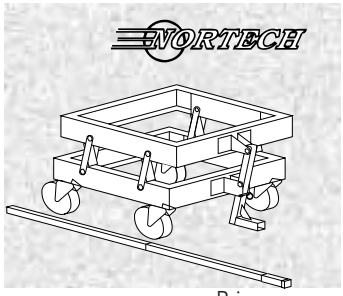

Part Number		Price per ea.
33-1058-00	Easy-Lift Pool Table Mover – Nortech	319.25
33-1119-00	Easy-Lift Replacement Caster	21.65
33-1245-00	Easy-Lift Replacement Safety Pin	8.45

EASY-LIFT VENDOR MOVER – NORTECH

- Makes moving heavy, bulky vending machines an easy 1 man job
- Fits all vending machines with a 5-3/4" high x 21" wide clearance
- Reduces risk of back injury
- Extremely heavy duty 4" casters
- 950 lb. load capacity
- Weighs 55 lbs.
- U.P.S. shippable

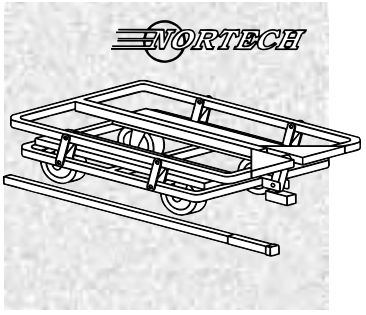

Part Number		Price per ea.
33-1060-00	Easy-Lift Vendor Mover – Nortech	313.15

GRIP STRIPS FOR EASY-LIFT VENDOR MOVER

- Set consists of 5 strips custom cut for exact fit on the Vendor Easy-Lift Mover, 33-1060-00
- New heavy duty rubber strips help grip the vending machine
- Prevents machine from sliding around
- Textured rubber surface adds even more grab to the machine
- Specially formulated adhesive permanently attaches rubber strips to metal

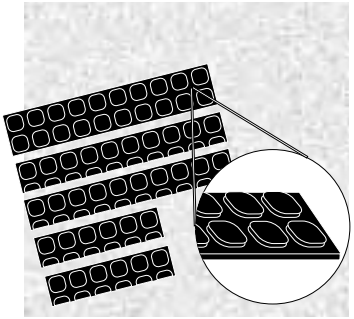

Part Number		Price per ea.
33-1060-01	Grip Strips for Easy-Lift Vendor Mover	9.70

ALUMINUM PLATFORM TRUCKS

NEW

- Great for casino or warehouse use
- Lightweight and easy to handle
- Extra rugged box frame construction
- Smooth deck plate
- Removable, reversible handle
- 8" x 2" Colson Performa high performance casters
- Full protective bumper
- 2000 lb. capacity
- Two-year warranty
- Weight: 24" x 48" truck weighs 68 lbs.; 30" x 60" truck weighs 74 lbs.

b&p Manufacturing
Materials Handling Equipment

Part Number		Price per ea.
33-1313-00	24" X 48" Aluminum Platform Truck	351.75
33-1314-00	30" X 60" Aluminum Platform Truck	433.50

© HAPP CONTROLS

WESCO SLOT MACHINE MOVER

- Ideal for raising, lowering and moving slot machines
- Easily raises slot machine from floor to slot stand or lowers it from slot stand to floor
- Foot operated hydraulic pump raises platform 54" high, foot release lowers platform
- Reduces risk of moving injuries
- Four-wheel dolly with front swivel casters
- Extra large platform 22" D x 22" W sits 5.75" above floor
- Wheel locks standard
- 750 lb capacity
- Steel frame construction
- Lift height: 54"; overall height 60.5"; 22.5" wide
- Rear wheels 8"x2" with .75" ball bearings
- 3.5" diameter polyurethane ball bearing front swivel casters
- Weight: 162 lbs

Part Number		Price per ea.
33-1259-00	Wesco Slot Machine Mover	1,143.45
33-1268-00	Replacement Hydraulic Jack	520.20
33-1286-00	Rubber Wheel	24.00
33-1287-00	Caster	38.45
33-1289-00	Replacement Spring and Seal Kit	207.10

HEAVY DUTY MACHINE TRANSPORT COVERS

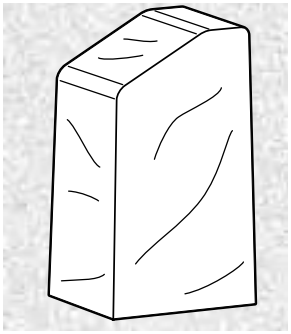

- Ideal way to protect your equipment during transport
- High Quality Cotton lined 35 oz. vinyl to protect against scratches
- Protects against sun, rain, snow, dust, and nicks
- Double stitched seams
- Equipped with brass grommets for easy tie down
- Easy to clean, simply wipe off

Part Number		Price per ea.
49-0694-00	Video Game Cover, Oversized 72"(H) x 37"(W) x 36"(D)	108.45
49-0695-00	Video Game Cover 66"(H) x 29"(W) x 33"(D)	84.35
49-0696-00	Pinball Cover, Transport Style 32"(H) x 25"(W) x 55"(D)	92.70
49-0697-00	Pinball Cover, Upright Style 46"(H) x 36"(W) x 60"(D)	84.35
49-0698-00	Poker Machine Cover 60"(H) x 26"(W) x 29"(D)	84.35
49-0699-00	CD Phonograph Cover 59"(H) x 41"(W) x 31"(D)	84.35
95-0702-00	7' Pool Table Cover 91"(L) x 55-1/2"(W) x 20"(D)	151.90
95-0639-00	8' Pool Table Cover 102"(L) x 57-1/2"(W) x 10"(D)	151.90
95-0700-00	Dart Fold Down Cover 47" (H) x 25" (W) x 34" (D)	84.35

DELUXE MOVING PAD

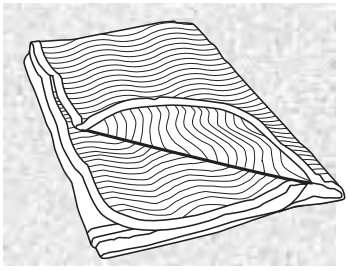

- Heavy-duty all cotton pad
- Will not scratch equipment
- Quilted together by a 1" locking stitch in a lazy "S" pattern
- Double stitched binding for long life
- Size: 72" x 80"
- Color: blue / blue

Part Number		Price per ea.
33-1185-00	Deluxe Moving Pad	36.15

HEAVY DUTY PLASTIC COVER

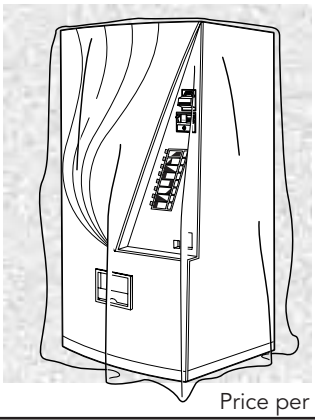

- Extra strong 3 mil plastic resists shredding from weather on the back of open trucks during transporting to and from locations
- Extra large size fits all types of equipment: 51"(W) x 49"(D) x 85"(H)
- Strong and durable, but flexible for easy folding for storage to use again
- Easy to cut to fit your specific application

Part Number		Price per ea.
27-1047-00	3 mil Heavy Duty Plastic Cover	7.30

CRAIN POWER CARPET STRETCHER

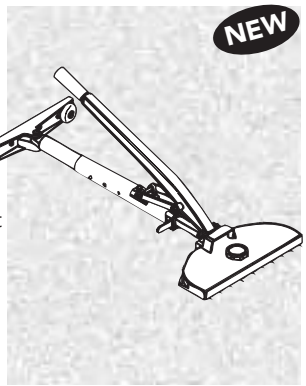

- Professional model
- Adjusting knob on top of power unit with a visual depth setting gauge – just set the dial to the desired pin depth and your ready to stretch
- Adjustable locking power head
- Auto-Lok tube allows you to adjust your stretcher poles in a flash
- Speed roller tail block
- Adjusts from 35" to 22'
- Heavy-duty, blow-molded custom carrying case
- Weight: Stretcher without case is 36 lbs; Custom-carrying case is 11 lbs
- Model 500

Part Number		Price per ea.
33-1291-00	Crain Power Carpet Stretcher	459.00

SLATE LIFTER KIT, BY NORTECH

- Safely lifts and rotates pool table slate to come to you while resurfacing table
- Allows 1 person to recover a pool table
- Simple, but clever design makes this kit very easy to use
- Includes instructional video tape if further instruction is necessary

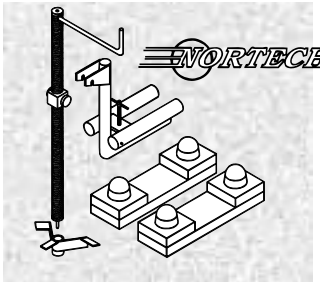

Part Number		Price per ea.
33-1059-00	Slate Lifter Kit	289.10
33-1217-00	Replacement Block and Roller Assy	30.15

RATCHET TIE-DOWN

- Two 3-1/4" vinyl coated "S" hooks
- 1" x 14' soft blue webbing will not scratch cargo
- 3,000 lb web capacity
- 1,200 lb assembly capacity
- Made in USA

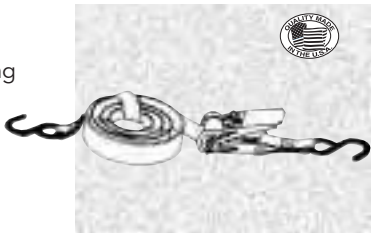

Part Number		Price per ea.
33-1148-00	Ratchet Tie-Down	18.05

HEAVY-DUTY RATCHET TIE-DOWN

- Hook and "D" ring ends
- 1" x 15' soft blue web will not scratch cargo
- 3,000 lb web capacity
- 2,000 lb assembly capacity
- Made in USA

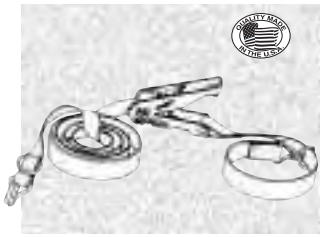

Part Number		Price per ea.
33-1147-00	Heavy-Duty Ratchet Tie-Down	20.85

STRETCH-WRAP FILM & DISPENSER

FILM

- Ideal for use in storage or transportation of machines
- Protects shipments and reduces damage
- Premium blown film provides excellent puncture resistance for securing uniform or irregular loads
- Resists puncturing or tearing, even around sharp corners
- Superior cling keeps loads secure even in -5°F
- Thick 80 gauge film
- 18" x 1500 ft., 3" core
- 4 rolls per case

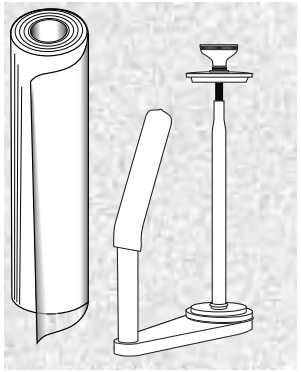

DISPENSER

- High strength and high quality - built to last
- Adjusts to 12", 15" and 18" widths, 3" core
- Foam handle is angled to reduce fatigue
- Top tension control to keep stretch constant
- Weighs only 3-1/2 lbs

Part Number		Price per ea.	L/4
39-0036-00	Heavy Duty Stretch-Wrap Film	17.55	16.70
39-0037-00	Stretch Film Dispenser	96.35	–

BIN BOX

- Handy, economical way to stock parts
- Stock parts of a variety of sizes side by side
- 6"(W) x 12"(L) x 4-1/2"(H)
- Heavy duty, self-locking, white cardboard
- Mark the front of the box for quick parts identification

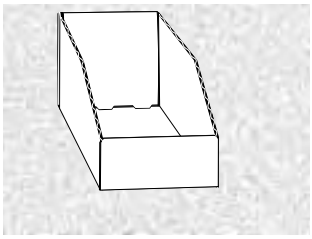

Part Number		Price per ea.	L/25
27-1056-00	Bin Box	1.65	1.45

CORRUGATED WHITE SHELF BINS

- Heavy-duty self-locking corrugated
- Sold in bundles of 25 only

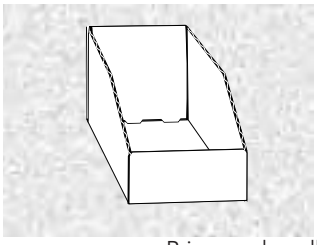

Part Number	Size	Price per bundle
27-1226-00	11" D x 2-1/4" W x 4-3/4" H	32.55
27-1227-00	11" D x 4-1/4" W x 4-3/4" H	45.80
27-1228-00	11" D x 8-1/4" W x 4-3/4" H	59.10

UTILITY BOX

- Clear plastic
- Removable dividers
- 6 to 18 compartments

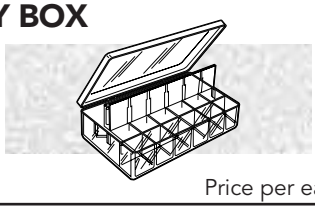

Part Number		Price per ea.
83-0004-00	Utility Box	5.20

COLLAPSIBLE BASKET

- Extra strong stackable polypropylene basket is attractive and durable,
- Excellent protection for breakable items
- Open slots on every side makes this perfect for items that require ventilation
- Open slots also allow for easy visual inspection
- Folds and stores flat until needed. Then snaps open instantly to hold and store files, tote mail, office forms, ledgers, paper recycling bin, products around the office, on the road or throughout the plant
- Dimensions open: 10-3/4"(H) x 20-3/4"(L) x 13-1/4"(W)
- Dimensions closed: 2-2/3"(H) x 20-3/4"(L) x 13-1/4"(W)
- 10 per case

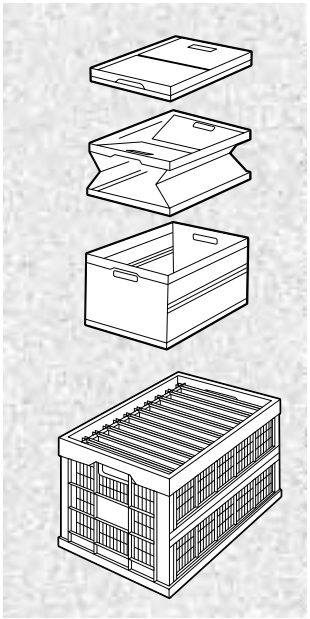

Part Number		Price per ea.	L/10
27-1038-00	Collapsible Basket - Blue	20.50	19.35
27-1044-00	Collapsible Basket - Red	20.50	19.35

© HAPP CONTROLS

QUANTUM ULTRA SERIES BINS

- Ultra strong bins that will stack on one another or hang on louvered panels
- Bins are made from heavy duty, virgin, high-density polypropylene/ polyethylene
- Large multiple label slots provide easy label insertion and part identification
- Extra wide stacking ledge assures stability for high stacking
- Reinforced design adds strength and prevents spreading
- Will not rust or corrode and are unaffected by weak acids and alkalis, and are waterproof
- Interchangeable with other manufactured brands of bins
- Standard colors: Blue, Yellow, Red, Ivory and Green
- Optional windows available to maximize storage capacity and prevent spillage
- Optional dividers keep contents organized
- Made in the USA

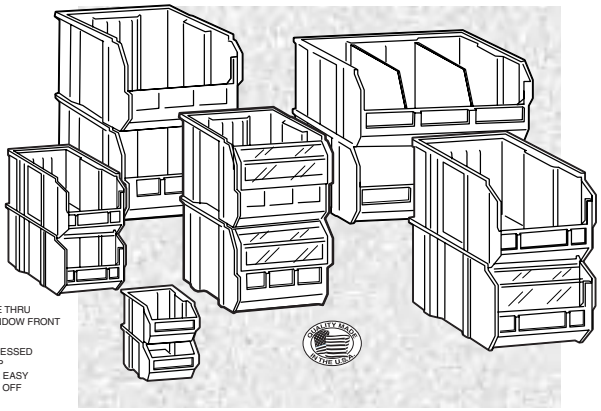

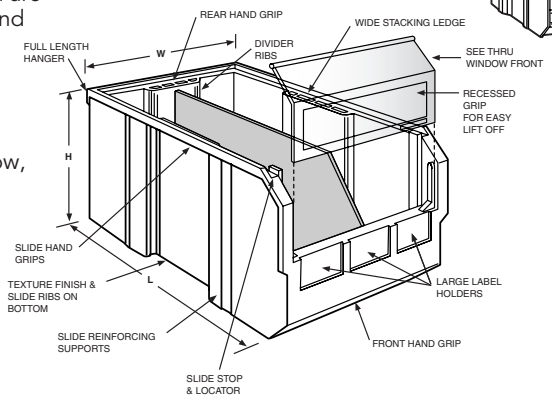

COLOR CODE X = Color
B = Blue
G = Green
I = Ivory
R = Red
Y = Yellow

Ask for our 36 - page catalog of Quantum Products

		Outside Dimensions			Inside Dimensions			
Part Number	Model No.	L″	W″	H″	L″	W″	H″	Capacity
83-0043-X	QUS 205	4-1/2″	4-1/8″	3″	3-3/16″	3-1/2″	2-7/8″	8 lbs.
83-0044-X	QUS 210	5-1/2″	4-1/8″	3″	4-1/2″	3-1/2″	2-7/8″	10 lbs.
83-0057-X	QUS 220	7-1/2″	4-1/8″	3″	6-1/2″	3-1/2″	2-7/8″	10 lbs.
83-0056-X	QUS 230	11″	5-1/2″	5″	8-11/16″	4-13/16″	4-13/16″	30 lbs.
83-0055-X	QUS 233	13-1/2″	5-1/2″	5″	11-1/4″	4-13/16″	4-13/16″	30 lbs.
83-0045-X	QUS 235	11″	11″	5″	9″	10-3/8″	4-13/16″	50 lbs.
83-0046-X	QUS 239	11″	8-1/4″	7″	9″	7-1/2″	6-3/4″	50 lbs.
83-0047-X	QUS 240	14-3/4″	8-1/4″	7″	12-7/8″	7-1/2″	6-3/4″	60 lbs.
83-0048-X	QUS 245	11″	16-1/2″	5″	9″	15-3/4″	4-13/16″	60 lbs.
83-0049-X	QUS 250	14-3/4″	16-1/2″	7″	12-7/8″	15-3/4″	6-3/4″	75 lbs.
83-0050-X	QUS 255	16″	11″	8″	13-5/8″	10-1/4″	7-3/4″	75 lbs.
83-0051-X	QUS 260	18″	11″	10″	15-5/8″	10-1/4″	9-3/4″	75 lbs.
83-0052-X	QUS 265	18″	8-1/4″	9″	17-1/8″	6-3/4″	8-1/4″	60 lbs.
83-0053-X	QUS 270	18″	16-1/2″	11″	15-5/8″	15-3/4″	10-3/4″	——-
83-0054-X	QUS 531	19-3/4″	12-3/8″	5-7/8″	18-1/2″	11″	5-5/8″	75 lbs.

Part Number	Model No.	Price per ea.	Window Part No.	Model No.	Price per ea.	Length Divider Part No.	Model No	Price per ea.
83-0043-X	QUS 205	.97	——-		—	83-0069-00	DUS 205	.66
83-0044-X	QUS 210	1.05	——-		—	83-0070-00	DUS 210	.68
83-0057-X	QUS 220	1.75	——-		—	83-0071-00	DUS 220	.72
*83-0056-X	QUS 230	4.20	83-0056-00	WUS 230	.89	83-0072-00	DUS 230	1.20
*83-0055-X	QUS 233	5.10	83-0058-00	WUS 233	.79	83-0074-00	DUS 233	1.30
83-0045-X	QUS 235	6.75	83-0059-00	WUS 235	1.20	83-0076-00	DUS 235	1.20
83-0046-X	QUS 239	7.20	83-0060-00	WUS 239	1.10	83-0077-00	DUS 239	1.50
83-0047-X	QUS 240	7.65	83-0061-00	WUS 240	1.10	83-0078-00	DUS 240	1.80
83-0048-X	QUS 245	9.60	83-0062-00	WUS 245	2.35	——-	——-	—
83-0049-X	QUS 250	12.25	83-0063-00	WUS 250	2.35	83-0080-00	DUS 250	1.80
83-0050-X	QUS 255	11.75	83-0064-00	WUS 255	1.95	83-0081-00	DUS 255	3.30
83-0051-X	QUS 260	16.10	83-0065-00	WUS 260	1.95	83-0082-00	DUS 260	3.55
83-0052-X	QUS 265	13.85	83-0066-00	WUS 265	1.85	83-0083-00	DUS 265	3.10
83-0053-X	QUS 270	21.55	83-0067-00	WUS 270	2.75	83-0084-00	DUS 270	3.55
83-0054-X	QUS 531	12.75	83-0068-00	WMS 531	2.00	83-0085-00	DMS 531	2.70

*Cross Divider Available

Part Number	Model	Description	Price per ea.
83-0073-00	CDUS 230	For 83-0056-X	.72
83-0075-00	CDUS 233	For 83-0055-X	.72

QUANTUM MODULAR CLEAR BIN SYSTEM

- Injection molded from virgin, break resistant copolymer polypropylene
- Three permanent, molded dividers per bin
- See through drawers for easy viewing
- Compartments tilt open to a 45 degree angle providing easy access
- Color: Blue

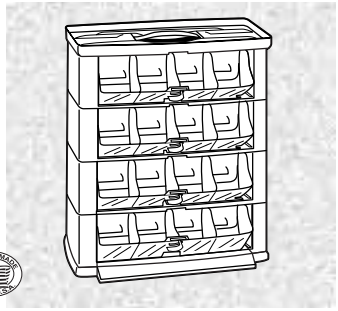

Part Number 83-0088-00
Model No.: MB 600
Outside Dimensions: 7-1/4" D x 13-5/8" W x 11-5/8" H
Bin Dimensions: 3-3/4" D x 10-5/8" W x 3-1/4" H

Part Number 83-0089-00
Model No.: MB 800
Outside Dimensions: 7-1/4" D x 13-5/8" W x 15" H
Bin Dimensions: 3-5/8" D x 10-1/2" W x 3-1/4" H

Part Number		Price per ea.
83-0088-00	Quantum MB 600 6-Bin System	21.70
83-0089-00	Quantum MB 800 8-Bin System	28.05

QUANTUM ULTRA HANGING SYSTEMS

- Bins hang on louvered panels that are wall mounted or table top
- Panels accept a wide range of bin sizes
- Systems are formed from heavy duty 16 gauge cold rolled steel
- Grey baked enamel finish
- Made in the USA
- Bins sold separately

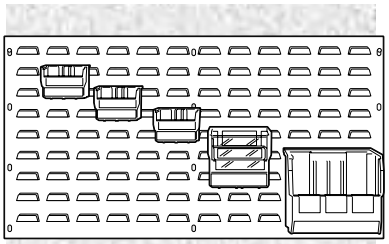

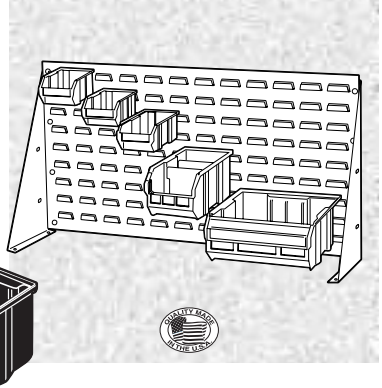

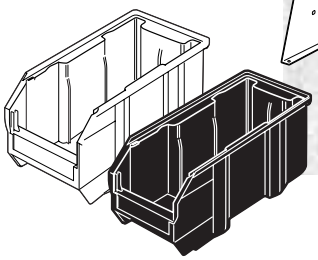

Part Number	Model No.	Description	Price per ea.
83-0052-00	QLP-1819	Wall Mount 18" L x 19" H	22.90
83-0053-00	QLP-3619	Wall Mount 36" L x 19" H	32.15
83-0055-00	QBR-3619	Bench Rack 36" L x 19" H	49.00
83-0054-00	QLP-3661	Wall Mount 36" L x 61" H	137.60

QUANTUM MODULAR CLEAR DRAWERS

- Injection molded from virgin, break resistant copolymer polypropylene
- Bin systems can be wall mounted or stacked on top of one another
- See through drawers for easy viewing
- Internal dividers may be removed to adjust size of drawer compartments
- Color: Blue

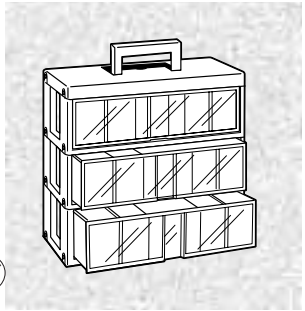

Part Number 83-0086-00
Model No.: MD 815
Outside Dimensions: 5-1/2" D x 12-1/8" W x 6-3/4" H
Bin Dimensions: 5-5/8" D x 11-1/4" W x 1-1/2" H

Part Number 83-0087-00
Model No.: MD 817
Outside Dimensions: 5-1/2" D x 12-1/8" W x 11" H
Bin Dimensions: 5-5/8" D x 11-1/4" W x 3" H

Part Number		Price per ea.
83-0086-00	Quantum MD 815 Small 3-Drawer Unit	12.45
83-0087-00	Quantum MD 817 Large 3-Drawer Unit	16.50

LUMBAR SUPPORT BELTS

- Reduces back strain & injuries
- Helps keep back muscles warm & flexible
- Double elastic stretch binding ensures comfortable firm support
- Sewn-in support for small of back
- Sizes: Small, Medium, Large & Extra-Large
- Made in the USA

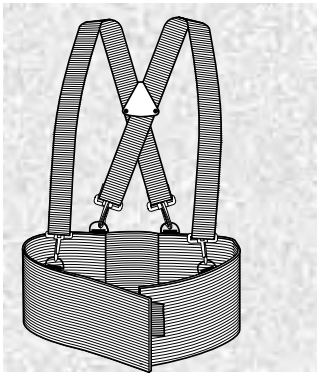

Part Number		Price per ea.	L/3
33-1178-00	Small 28"– 32"	30.55	28.55
33-1176-00	Medium 32"– 36"	30.55	28.55
33-1175-00	Large 36"– 40"	30.55	28.55
33-1177-00	Extra-Large 40"– 44"	30.55	28.55

GRAND PACK-N-ROLL PORTABLE Z-CART

- Lightweight, durable, rust-proof PVC construction
- Convenient and compact
- Aluminum telescoping handle with comfortable contoured plastic grip, extends to 23"
- Smooth rolling rubber tires
- Snap-on side support braces for additional strength
- This portable cart collapses into an easy to carry compact case
- Size: 16.5" L x 15" W x 14" H
- Color: Black
- Capacity: 80 lbs.

Part Number		Price per ea.
33-1293-00	Grand Pack-N-Roll Portable Z- Cart	29.99

© HAPP CONTROLS

HAPP CONTROLS MONITORS

HAPP CONTROLS has a proud history of listening to what our customers want, and going out and getting the job done. By listening to our customers needs, and with the knowledgeable help of our engineering department, Happ Controls introduces our own line of top quality, 1st rate monitors. Below are the monitors we are proud enough to put on!

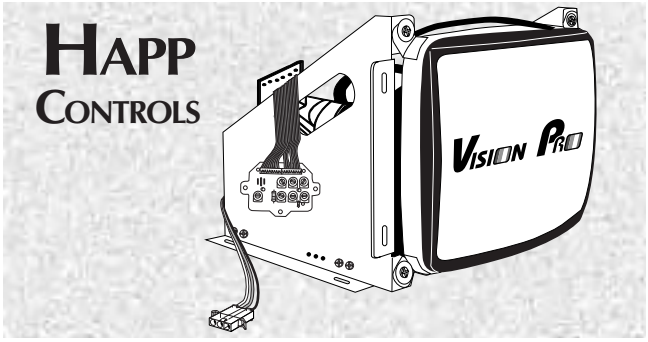

VISION PRO
13" SHELF MOUNT MONITOR

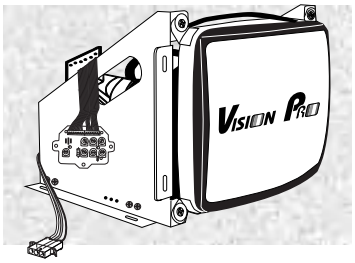

- Increase your games profits with this top quality monitor; it's a great replacement for that game's old, worn down monitor
- Very popular for counter top games
- Open frame design
- Front controls board makes adjusting easy
- Quality picture tube
- CGA Resolution
- No isolation transformer required
- Call for schematics
- Includes U.S. line cord (49-6140-00)

Part Number		Price per ea.
49-1345-VP	Vision Pro 13" Shelf Mount Monitor	224.90

Power Supply	Frequency: 47-63 Hz Voltage: 90-264 vac Consumption: Less than 70 watts
Input VideoSingal	Red, Green, Blue analog input 50 ohm termination to ground Level: 0 to 2.4 Vpp
Input Sync Signal	Seperate H/V sync input 10 k termination to ground
Horizontal Deflection	Scanning Frequency: Nominal (15-17.5KHz)Retrace period : <9.0us
Vertical Deflecton	Scanning Frequency: 50-65Hz Retrace period:<900us
Linearity	± 5%
Picture Size Regulation	Static Regultion: 2% Dynamic Regulation: 1.5%
Geometric Distortion	2%
Degaussing	Auto at power on
High Voltage	27KV
Enviromental Conditions	Operating Temperature: 10-60˚C Humidity: 10˚-90%, no condensation
Dot Pitch	.69mm
Power Connector	3 Ckt Molex Power Connector Plug 19-09-2039 with male terminal 02-09-2116 Mates with 3 Ckt Molex Power Connector Receptacle 19-09-1039 and female terminal 02-09-1119
Signal Connector	6 CKT .156 Header
Viewable Size/Type	13" RGB
Resolution	624 x 200
Approvals	UL, CUL, TUV

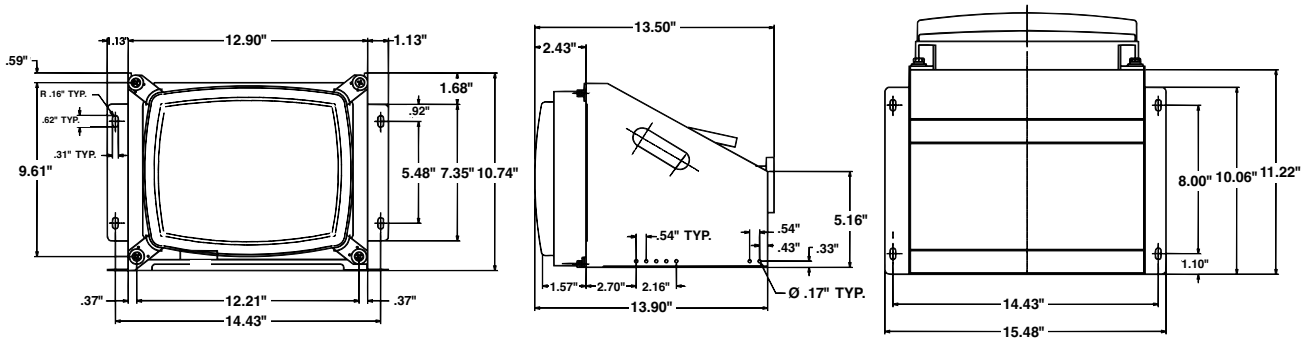

VISION PRO CGA SHELF MOUNT MONITOR

- This 19" monitor has great visual clarity and color making playing your game a pleasurable experience. No eye straining because of blurring or fading color
- Open frame design
- Front controls board makes adjusting easy
- Quality picture tube
- CGA Resolution
- No isolation transformer required
- Call for schematics
- Includes U.S. line cord (49-6140-00)

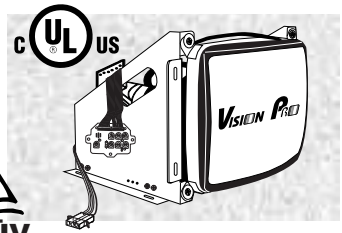

- Remote Adjustment PCB with adjustments for Brightness, Contrast, H. Size, H. Center, V. Size and V. Center
- Remote PCB mounted on cable extending about 30" from the monitor chassis

Part Number		Price per ea.
49-1329-VP2	Vision Pro 19" Shelf Mount CGA Monitor	198.90

Power Supply	Frequency: 47-63 Hz Voltage: 90-264 vac Consumption: Less than 70 watts
Input VideoSingal	Red, Green, Blue analog input 50 ohm termination to ground Level: 0 to 2.4 Vpp
Input Sync Signal	Seperate H/V sync input 10 k termination to ground
Horizontal Deflection	Scanning Frequency: Nominal (15-17.5KHz) Retrace period : <9.0us
Vertical Deflecton	Scanning Frequency: 50-65Hz Retrace period:<900us
Linearity	± 5%
Picture Size Regulation	Static Regultion: 2% Dynamic Regulation: 1.5%
Geometric Distortion	2%
Degaussing	Auto at power on
High Voltage	27KV
Enviromental Conditions	Operating Temperature: 10-60°C Humidity: 10°-90%, no condensation
Dot Pitch	.78mm
Power Connector	3 Ckt Molex Power Connector Plug 19-09-2039 with male terminal 02-09-2116 Mates with 3 Ckt Molex Power Connector Receptacle 19-09-1039 and female terminal 02-09-1119
Signal Connector	6 CKT .156 Header
Viewable Size/Type	19" RGB
Resolution	624 x 200
Approvals	UL, CUL, TUV

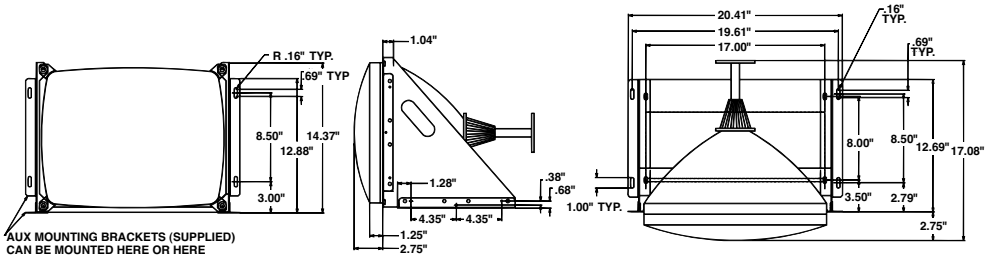

VISION PRO 13" VGA MONITOR

- Delivers high performance video!
- "A" quality CRT
- Open frame, shelf mount style
- External control board
- No isolation transformer required
- Call for schematics
- Remote control PCB has a 30" cable, and adjustments for Brightness, Contrast, H. Size, H. Center, V. Size and V. Center

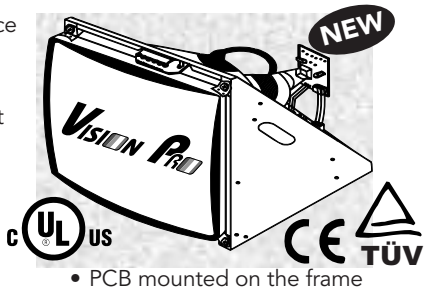

- PCB mounted on the frame above the CRT
- UL and CSA Recognized
- UL No. E146991/LR98608
- Includes U.S. line cord (49-6140-00)

Part Number		Price per ea.
49-1342-VP	Vision Pro 13" VGA Monitor, Shelf Mount	Call for pricing

Power Supply	Frequency: 47-63 Hz Voltage: 100-230 Consumption: Less than 70 watts
Input Video Signal	Red, Green, Blue analog input 75 ohm termination to ground Level: 0 to 700mV
Input Sync Signal	Separate H/V sync input 5.1V Zener to ground
Level	TTL level
Polarity	Positive
Horizontal Deflection	Scanning Frequency: 31.5KHz Retrace period: <5us
Vertical Deflection	Scanning Frequency: 47-70Hz Retrace period: <500us
Linearity	± 5%
Picture Size Regulation	Static Regulation: 2% Dynamic Regulation: 1.5%
Geometric Distortion	2%
Degaussing	Auto at power on
High Voltage	26KV
Environmental Conditions	Operating Temperature: 10~60°C Humidity: 10° ~ 90%, no condensation
Dot Pitch	.78mm
Power Connector	3 Ckt Molex Power Connector Plug 19-09-2039 with male terminal 02-09-2116. Mates with 3 Ckt Molex Power Connector 19-09-1039 a Receptacle female terminal 02-09-1119
Signal Connector	6 CKT .156 Header
Viewable Size/Type	13" VGA
Resolution	640 x 480
Approvals	UL, CUL, TUV, CE

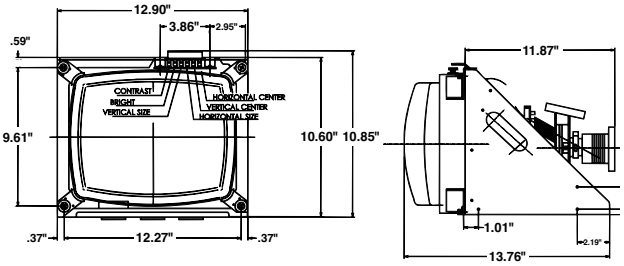

© HAPP CONTROLS

VISION PRO 19" VGA MONITOR

- Delivers high performance video!
- "A" quality picture tube
- Open frame, shelf mount style
- 640 x 480 graphics mode
- VGA resolution
- No isolation transformer required
- Remote Adjustment PCB with adjustments for Brightness, Contrast, H. Size, H. Center, V. Size and V. Center
- Remote PCB mounted on cable will extend about 30" from the monitor making adjustments easy
- AC connection is made with supplied US line cord (49-6140-00)
- Call for schematics

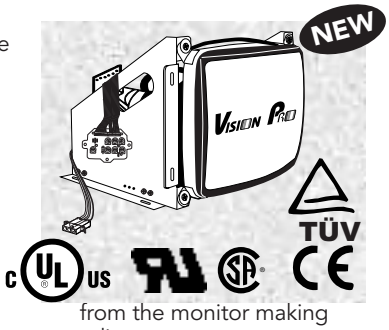

Part Number		Price per ea.
49-1337-VP2	Vision Pro 19" VGA Monitor	322.50

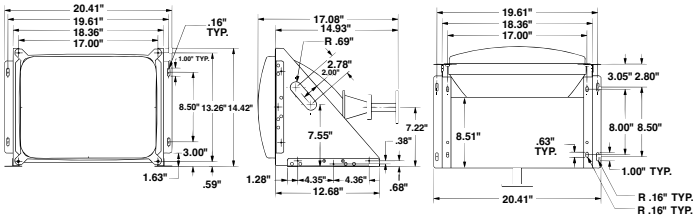

Happ Part Number	49-1337-VP
Power Supply	Frequency: 47-63Hz Voltage: 100-230vac Consumption: Less than 70 watts
Input Video Signal	Red, Green, Blue analog input 75 ohm termination to ground Level: 0 to 700mV
Input Sync Signal	Separate H/V sync input 5.1V Zener to ground Level: TTL level Polarity: Positive
Horizontal Deflection	Scanning Frequency: 31.5KHz Retrace period: <5us
Vertical Deflection	Scanning Frequency: 47-70Hz Retrace period: <500us
Linearity	± 5%
Picture Size Regulation	Static Regulation: 2% Dynamic Regulation: 1.5%
Geometric Distortion	2%
Degaussing	Auto at power on
High Voltage	27KV
Environmental Conditions	Operating Temperature: 10~60°C Humidity: 10° ~ 90%, no condensation
Dot Pitch	.78mm
Power Connector	3 Ckt Molex Power Connector Plug 19-09-2039 with male terminal 02-09-2116. Mates with 3 Ckt Molex Power Connector Receptacle 19-09-1039 and female terminal 02-09-1119
Signal Connector	6 CKT .156 Header
Viewable Size/Type	19" VGA
Resolution	640 x 480
Approvals	UL, CUL, TUV, CE, CSA

VISION PRO 27" SVGA UNIVERSAL MOUNT MONITOR

- Original replacement for Global VR PGA Golf
- This 27" monitor has great visual clarity and color, making playing your game a pleasurable experience. No eye straining because of blurring or fading color
- Open frame design
- Front controls board makes adjusting easy
- Quality picture tube
- VGA/SVGA Resolution
- No isolation transformer required
- Call for schematics
- Remote Adjustment PCB with adjustments for Brightness, Contrast, H. Size, H. Center, V. Size and V. Center
- Remote OSD (On screen display) PCB mounted on cable extending about 30" from the monitor chassis
- Includes US line cord (49-6140-00)

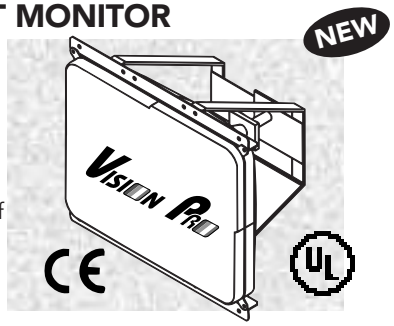

Happ Part Number	
CRT Viewable	27" Diagonal
Bandwidth	Maximum 40Mhz
Scanning Frequency	Horizontal 30-40KHz Vertical 50-120Hz
Display	SVGA 800 x 600; VGA 640x480
User Control Display	DigitalPosition, size, pincushion, H/V Corner, Pin-B, Trapezoid, Parallel, Tilt, Moire, Zoom, Color Temperature, Recall, Manual Degauss
Language	English/German/French/Spanish/Portuguese
Resolution	640 X 480 @ 60Hz or 800 X 600 @60Hz
Signal Input	Connector 15 pin d-sub
Power	Voltage 90-264V AC
AC Line Cord	1 Meter length 3-prong US plug
Approvals	UL, CE Listed

Part Number		Price per ea.
49-6157-VP2	Vision Pro 27" Universal Mount SVGA Monitor	499.95

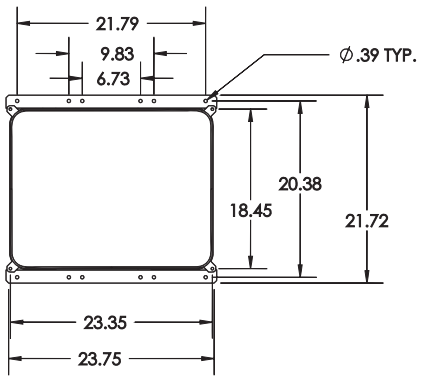

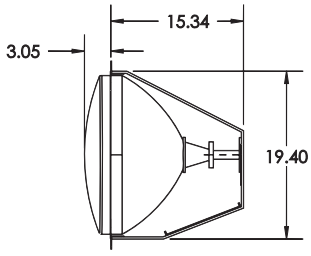

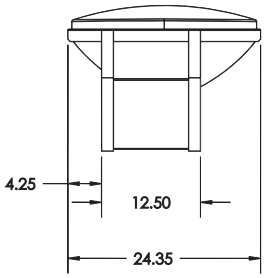

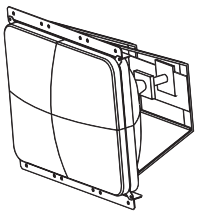

13" VGA MONITORS AND TOUCH SCREENS FOR MERIT MEGATOUCH XL

- 13" "A" quality CRT
- 640 x 480 graphics mode
- Open frame, shelf mount style

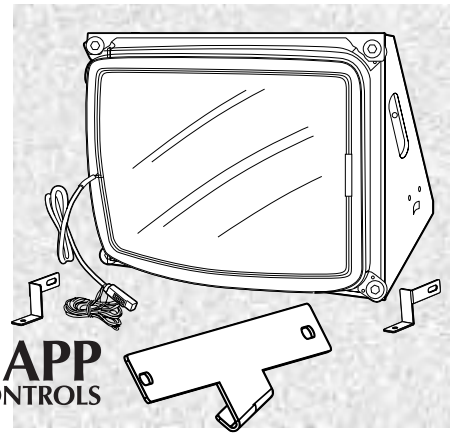

Part Number		Price per ea.
49-4022-00	VGA Monitor Kit with Elo Touch screen without Controller	633.60
49-4020-00	VGA Monitor Kit with MicroTouch Touch screen and Controller	927.45
49-4023-00	VGA Monitor Kit without Touch screen	403.60

MONITOR EXTENSION CABLE

- Used as VGA or SVGA monitor extension
- Extend your existing short monitor cable to provide useful flexibility
- DB15 Male on one end and DB15 Female on the other
- Ferrite cores on each end for noise suppression
- Shielded cable with multi-coax construction provides a sharp, clear display
- 6' overall length
- 15 pin

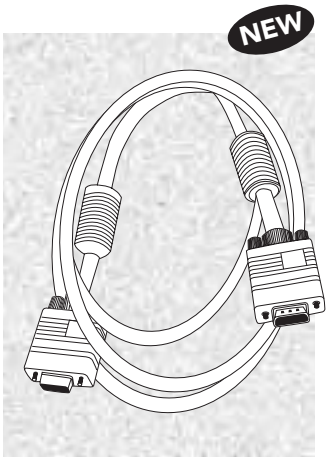

Part Number		Price per ea.
55-0282-00	Monitor Extension Cable, 6'	10.20

42" PLASMA DISPLAY MONITOR

- High brightness, High contrast
- PIP with 4 corner position
- Video input system: NTSC-M, NTSC 4.43, PAL, SECAM
- 42" viewable, diagonal
- Digital ready
- Resolution: 852(H) X 480(V)
- Pixel pitch: 1.08mm
- Viewing angle: over 160 degrees
- Audio control: Bass, Treble, balance, equalizer
- Audio Mode: 5 mode sound
- Power: AC100V-240 V (50/60Hz)
- 40" W x 25" H x 3" D
- Weight: 63.94 lbs
- Note: Specifications subject to change
- Artwork for display purposes only

Part Number		Price per ea.
49-6219-00	42" Plasma Display Monitor	5,224.95

© HAPP CONTROLS

CERONIX MONITORS

- The Standard of the Gaming Industry
- Built with Automatic Color Adjustment so every monitor displays the same
- Includes a high efficiency switching mode power supply for lower power requirements
- Engineered to run cool - without a fan
- Designed for easy maintenance
- Service manuals are clear and helpful

Part Number		Price per ea.
49-3015-00	14" CGA Monitor For IGT Upright Games	468.60
49-5194-00	14" VGA Monitor With Touch Screen & Controller For Upright Bally Games	1,035.20
49-5325-00	14" 1493 Flat Top Monitor With Touch Screen & Controller For IGT Games	1,232.60
49-6224-00	14" CGA Monitor For Aristocrat Games	447.35
49-5288-00	14" VGA Monitor With Touch Screen for IGT Game King	1,375.15
49-5187-00	17" Monitor With Touch Screen & Controller For IGT Slant Top Games	1,261.70
49-5270-00	17" VGA Monitor With Touch Screen & Controller For IGT I-Series Games	1,415.80
49-6201-00	17" SVGA Monitor With Touch Screen & Controller For Konami	1,035.20
49-1823-00	19" VGAMonitor For IGT Upright Game King With Touch Screen & Controller	989.35
49-5398-00	19" 18v VGA Monitor With Touch Screen For Austin Powers" And "I Dream of Jeannie"	1,089.30
49-4060-00	20" CGA Monitor For Leisure Time Games	541.00
49-5395-00	20" CGA Monitor For Aristocrat Games	721.00
49-5396-00	20" Hi-Res VGA Monitor For Aristocrat Games	593.00
49-5389-00	20" VGA Monitor For IGT Game King	536.85

17" CERONIX VGA MONITOR FOR WILLIAMS UPRIGHT GAMES

- Direct replacement for Wells-Gardner and Kristel monitors
- Best picture in the industry!
- Complete with touch screen and controller
- Dual focus high resolution
- .27mm dot trio
- Full active auto color bias
- Auto bright
- Rated operating temp 70 deg. cent.

Part Number		Price per ea.
49-5239-00	17" Ceronix VGA Monitor	827.15

PARTS FOR CERONIX MONITORS

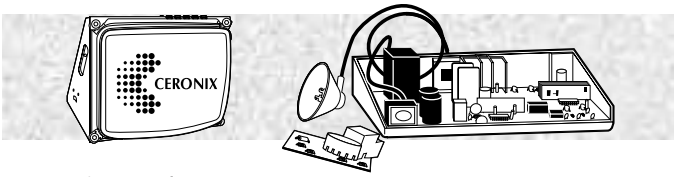

Part Number	Ref No.	Description	Price per ea.
49-5033-00	-	Monitor Repair Kit	9.65
49-3014-00	CPA4100	Chassis for Model 1492 Monitor CGA	198.75
49-5256-00	CPA4101	Neckboard for 1492 Monitor	22.90
49-5254-00	CPA4102	Remote Board	13.80
49-5240-00	CPA4108	Chassis for 2093 20" VGA Monitor	263.85
49-5169-00	CPA4113	Video Board	88.30
49-4059-00	CPA4128	PCB (Chassis) for 20" 2093 Monitor	224.05
49-5331-00	CPA4129	Main PCB Assembly For 1739 VGA Monitor	264.35
49-5212-00	CPA4130	Isolation Transformer	34.45
49-6080-00	CPA4133	Chassis For 1493 Monitor	228.85
49-6207-00	CPA4156	Neckboard Only For 1493 Series Monitor	52.00
49-3013-00	CPA4200	Chassis For Model 1493 Monitor VGA	237.30
49-5207-00	CPA4205	Chassis For 14" CGA Monitor	240.90
49-5269-00	CPA4221	Control Board for Monitor	223.90
49-6202-00	CPA4235	Chassis For 1493 Monitor	156.10
49-6131-00	CPA4243	Chassis For 1793 IGT Dual Focus Monitor	183.10
49-6164-00	CPA4244	Chassis Board For IGT Dual Focus Monitor	219.50
49-5161-00	CPC1002	330PFD, 100V	.12
49-5160-00	CPC1003	2200PFD, 1KV	.12
80-0087-00	CPC1100	1MFD, 50V Capacitor	1.15
62-0094-00	CPC1101	10MFD, 25V Capacitor	.44
62-0097-00	CPC1102	100MFD, 25V Capacitor	1.15
62-0130-00	CPC1103	220MFD, 35V Capacitor	.87
80-0109-00	CPC1104	1,000MFD, 35V Capacitor	2.65
62-0066-00	CPC1105	150MFD, 250V Capacitor	7.95
80-0078-00	CPC1109	470MFD, 50V Capacitor	1.90
49-5151-00	CPD1250	FDH400	.11
49-5157-00	CPD1251	IN4148	.08
49-5156-00	CPD1252	IN4005	.09
49-5155-00	CPD1253	IN4937	.11
49-5152-00	CPD1256	IN5954	.42
49-5154-00	CPD1264	FR205	.13
49-5153-00	CPD1266	HER205	.27
60-0025-00	CPI1400	LA7851 Vertical & Horizontal IC	3.15
49-3003-00	CPI1401	LA7830 Vertical Def. Output	1.45
60-0026-00	CPI1402	CA3224E Auto Bias	7.60
49-5131-00	CPI1403	XRC5184 IS for Power Supply	6.35
49-5135-00	CPI1406	LM339 Quad Comparitor IC	.75
49-5134-00	CPI1407	7812 IA Regulator	.60
49-3005-00	CPI1409	XRC5346A Custom Video IC	4.95
49-3006-00	CPI1410	LM393 Dual Comparator	.64
49-5136-00	CPI1414	LM392 OP Amp	1.15
49-5133-00	CPI1415	LA7838 V Deflection IC	2.60
49-5132-00	CPI1416	CO4024 7 Bit Counter	.38
49-7032-00	CPM 2056	Touch screen for IGT 14" Monitor	279.90
49-5238-00	CPM 2115	Controller for IGT Touch screen	286.15
49-2094-00	CPP1711A	Picture Tube for 14" VGA Monitor	234.90
49-5142-00	CPQ1301	MPS 2907	.16
49-5145-00	CPQ1302	MPSA64	.19
49-5147-00	CPQ1303	PN2222	.14
49-5139-00	CPQ1304	2SK 1446 FET 4.5A	1.90
49-5130-00	CPQ1305	2SD 1651 5A KV NPN	3.00
49-5146-00	CPQ1306	2SC 3675	1.85
49-5149-00	CPQ1307	2SC 4159	.99
49-5144-00	CPQ1308	2SC 3467	.32
49-5143-00	CPQ1309	2SA 1370	.39
49-5148-00	CPQ1310	2SA 1371	.46
49-5138-00	CPQ1315	IRF 520 FET	1.30
49-5141-00	CPQ1318	2SC 4125	8.05
49-4005-00	CPR0033	30 Ohm, 1/4W	.09
49-5128-00	CPR0376	1.2 Ohm, 1W Resistor	.12
49-5129-00	CPR0389	.33 Ohm, 2W Resistor	.15
49-3002-00	CPR0400	1K Ohm White Pot	.38
49-2099-00	CPR0401	1K Ohm Blue Pot	.38
49-2098-00	CPR0402	10K Ohm Yellow Pot	.38

PARTS FOR CERONIX MONITORS CONTINUED

Part Number	Ref No.	Description	Price per ea
49-2097-00	CPR0403	20K Ohm Orange Pot	.38
49-2096-00	CPR0405	500K Ohm Black Pot	.38
49-5244-00	CPR0433	Relay, 24V Coil	1.95
49-3018-01	CPR0500	"B" Pra Video Amplifier	3.30
49-5127-00	CPR0501	"J" Pra for Power Supply	1.50
49-3011-00	CPR0502	"I" Pra Horizontal Control	1.65
49-3009-00	CPR0503	"H" Pra Vertical Control	2.70
49-3010-00	CPR0504	"G" Pra Horizontal Width Control	2.00
49-3007-00	CPR0506	"C" Pra Auto Bias	1.55
49-5126-00	CPR0510	"K" Pra Video Amplifier	2.50
49-5137-00	CPT1516	FBT Meritron 31KHZ .75MA	27.30
49-3012-00	CPT1523	Horizontal Width Coil	1.30
49-5209-00	----------	14" CRT/Tube For 1492 CGA Monitor	281.15

HAPP CONTROLS MONITOR REPAIR CENTER

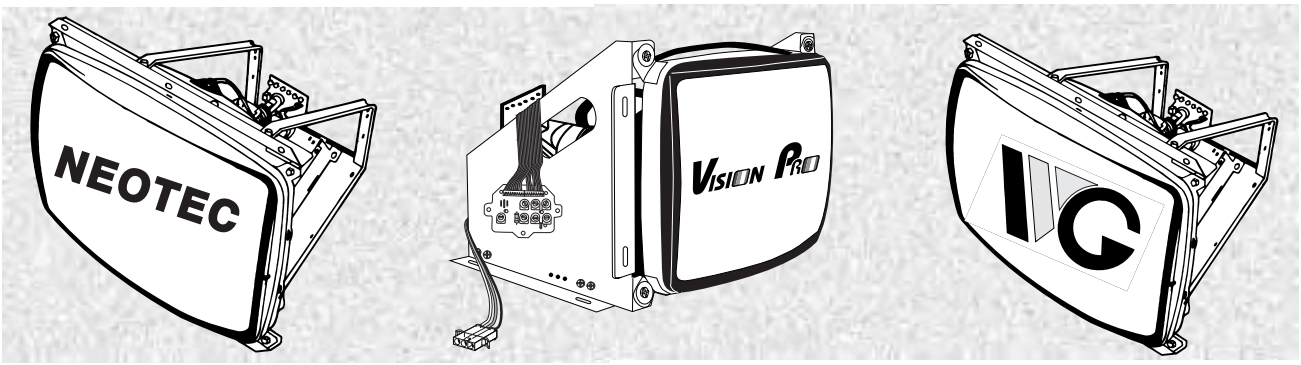

- Happ Controls, Wells-Gardner and Neotec amusement monitors and monitor chassis used in Midway and Atari games
- Quick turnaround time
- 30 day warranty on monitor or chassis board repairs
- $30.00 minimum charge
- Trained technicians with over 30 years experience
- All monitors are repaired on a parts and labor basis
- Repairs are done in our Elk Grove service center

NOTE:

Please send units to be repaired to:

HAPP CONTROLS SERVICE CENTER
106 GARLISCH DR.
ELK GROVE, IL 60007
TOLL FREE PHONE: 888-BUY-HAPP (289-4277)

© HAPP CONTROLS

WELLS-GARDNER MONITORS

- ISO 9001 Certified
- High Clarity with True Colors
- Standard Wells-Gardner 1 year warranty
- UL listed, C.S.A. Certified
- Prismatic Color

WELLS-GARDNER
ELECTRONICS CORPORATION

WELLS-GARDNER SERIES K7200 MONITORS

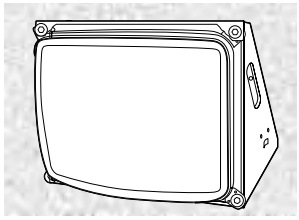

SPECIFICATIONS
- CRT Size (Diagonal Measure): 13", 19"
- PHOSPHOR Type: P22
- CRT Etch: Polished Faceplate
- Striped Trio Spacing: 0.42mm & 0.63mm (13"), 0.71mm (19")

INPUT SIGNALS
- Input Connector: 0.156 Center Header
- Video Type: RGB Analog
- Video Input Impedance: 4.7K Ohm;
- Video Level: 1 to 5 Volts Peak-To-Peak
- Sync Type: TTL Sync; Separate Or Composite, Negative Or Positive
- Sync Input Impedance: 20K Ohm for Positive, 12K Ohm for Negative
- Horizontal Sync Frequency: 15.75 Khz
- Vertical Sync Frequency: 47 to 63 Hz

POWER INPUT
- Input Voltage: 90-264 VAC, 50-60 Hz; **No Isolation Transformer Required**
- Maximum Power: 70 Watts (19")

USER CONTROLS
- Remote Controls: Brightness, Contrast, Horizontal Centering, Vertical Size, Vertical Centering, Vertical Hold
- Internal Controls: Horizontal Hold, Horizontal Size, Focus

MISCELLANEOUS
- Operating Temperature: 0 to 55 Degrees C
- Agency Compliance: U.L., C.S.A., D.H.H.S. Radiation Performance Std.

RESOLUTION
- Graphic Modes: 640 x 200 (May Be Limited By The CRT)
- Video Bandwidth: 12 MHz Typical

Wells-Gardner Warranty: 1 Year

Part Number		Model No.	Price per ea.
49-0548-00	13" Std Resolution Horizontal Mount	WGM1372-Series	264.95
49-0536-00	19" Std Resolution Horizontal Mount	WGE1972-Series	280.60

Part Number		Price per ea.	L/100
43-0778-00	AMP Terminal Male for use on Wells Gardner 3-pin Power Connector Amp Ref. 350690-1	.24	.19
43-0779-00	AMP 3 Circuit Mate-N-Lock Plug for use on Wells Gardner 3-pin Power Connector Amp Ref. 1-480700-0	.53	.43

WELLS-GARDNER SERIES K7400 MONITORS

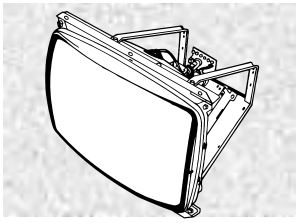

These Monitors Retrofit the Following Games:
ATARI: Area 51, Maximum Force

CAPCOM: All Games

KONAMI: Lethal Enforcer, Rushing Heroes, Simpsons, Turtles

NAMCO: Alpine Racer I, II, Cyber Cycles, Moto Cross, Tekken I, II, III, Time Crisis,

SEGA: Die Hard

SNK: All Games

WILLIAMS: All Mortal Kombat Games, All Killer Instinct Games, All NBA Jam Games, Wayne Gretzky Hockey

SPECIFICATIONS
- CRT Size (Diagonal Measure): 25", 27"
- PHOSPHOR Type: P22
- CRT Etch: Polished Faceplate
- Striped Trio Spacing: 0.84mm

INPUT SIGNALS
- Input Connector: 0.156 Center Header
- Video Type: RGB Analog
- Video Input Impedance: 1K Ohm;
- Video Level: 1.5 to 4 Volts Peak-To-Peak
- Sync Type: TTL Sync; Separate Or Composite, Negative Or Positive
- Sync Input Impedance: 4.7K Ohms
- Horizontal Sync Frequency: 15.75 Khz
- Vertical Sync Frequency: 47 to 63 Hz

POWER INPUT
- Input Voltage: 90-264 VAC, 50-70 Hz; **No Isolation Transformer Required**
- Maximum Power: 85 Watts

USER CONTROLS
- Remote Controls: Brightness, Contrast, Horizontal Size, Horizontal Centering, Horizontal Frequency, Vertical Size, Vertical Centering, Vertical Frequency
- Internal Controls: Focus, Horizontal Frequency

MISCELLANEOUS
- Operating Temperature: 0 to 55 Degrees C
- Agency Compliance: U.L., C.S.A., D.H.H.S. Radiation Performance Std., TUV

RESOLUTION
- Graphic Modes: 640 x 200 (May Be Limited By The CRT)
- Video Bandwidth: 15 MHz Typical

Wells-Gardner Warranty: 1 Year

Part Number		Model No.	Price per ea.
49-0726-00	25" Std Resolution Universal Mount	WGM2574-Series	487.90
49-0672-00	27" Std Resolution Universal Mount	WGM2774-Series	580.75

WELLS-GARDNER MONITORS

- ISO 9001 Certified
- High Clarity with True Colors
- Standard Wells-Gardner 1 year warranty
- UL listed, C.S.A. Certified
- Prismatic Color

WELLS-GARDNER
ELECTRONICS CORPORATION

WELLS-GARDNER SERIES K7500 MEDIUM RESOLUTION MONITORS

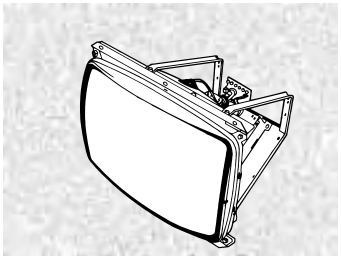

These Monitors Retrofit the Following Games:
ATARI: Race Driver, San Francisco Rock, San Francisco Rush
KONAMI: GTI Club, Winding Heat
SEGA: Daytona, Fighting Vipers, House of Dead, Indy, Moto Raid, Touring Car, Virtual (All Games)
WILLIAMS: Cruisin, NFL Blitz, Offroad, USA World

SPECIFICATIONS
- CRT Size (Diagonal Measure): 25", 27"
- PHOSPHOR Type: P22
- CRT Etch: Polished Faceplate
- Striped Trio Spacing: 0.84mm (25" & 27")

INPUT SIGNALS
- Input Connector: 0.156 Center Head
- Video Type: RGB Analog
- Video Input Impedance: 1K Ohm;
- Video Level: 1.5 to 4 Volts Peak-To-Peak
- Sync Type: TTL Sync; Separate Or Composite, Negative Or Positive
- Sync Input Impedance: 4.7K Ohms
- Horizontal Sync Frequency: 25Khz
- Vertical Sync Frequency: 47 to 63 Hz

POWER INPUT
- Input Voltage: 90-264 VAC, 50-70 Hz; **No Isolation Transformer Required**
- Maximum Power: 130 Watts

USER CONTROLS
- Remote Controls: Brightness, Contrast, Horizontal Size, Horizontal Centering, Vertical Size, Vertical Centering, Vertical Frequency

MISCELLANEOUS
- Operating Temperature: 0 to 55 Degrees C
- Agency Compliance: U.L., C.S.A., D.H.H.S. Radiation Performance Std., TUV

RESOLUTION
- Graphic Modes: Mid Res - 640 x 400 (May be limited by the CRT)
- Video Bandwidth: 15 MHz Typical

Wells-Gardner Warranty: 1 Year

Part Number		Model No.	Price per ea.
49-0282-00	25" Mid Resolution Universal Mount	WGM2575-Series	626.30

Part Number		Price per ea.	L/100
43-0778-00	AMP Terminal Male for use on Wells Gardner 3-pin Power Connector Amp Ref. 350690-1	.24	.19
43-0779-00	AMP 3 Circuit Mate-N-Lock Plug for use on Wells-Gardner 3-pin Power Connector Amp Ref. 1-480700-0	.53	.43

WELLS-GARDNER SERIES U3000 MONITORS

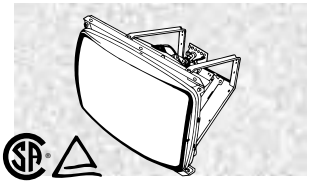

For the Gaming Market

SPECIFICATIONS
- CRT Size (Diagonal Measure): 14", 17", 19", 27", 33"
- PHOSPHOR Type: P22
- CRT Etch: Polished Faceplate
- Phosphor Trio Spacing: 0.28mm or 0.39mm (14"), 0.71mm (19")

INPUT SIGNALS
- Input Connector: 15 pin D-sub male; VGA compatible
- Video Type: RGB Analog
- Video Input Impedance: 75 Ohm: 470 Ohm optional
- Video Level: 0.7 Volts Peak-To-Peak
- Sync Type: Standard VGA/SVGA TTL sync; composite optional
- Sync Input Impedance: 4.7K Ohm
- Horizontal Sync Frequency: 31.5, 35 kHz
- Vertical Sync Frequency: 56 to 70 Hz

LIGHT OUTPUT
- 40 fl typical

GEOMETRY
- Horizontal linearity: +/- 5%
- Vertical linearity: +/- 5%
- Picture size regulation: 1%
- Geometric distortion: +/- 2% max

POWER INPUT
- Input Voltage: 90-264 VAC, 50-70 Hz; **No Isolation Transformer Required**
- Maximum Power: 130 Watts

USER CONTROLS
- Remote Controls: Brightness, Contrast, Horizontal Size, Horizontal Centering, Vertical Size, Vertical Centering
- Internal Controls: Horizontal Frequency, Vertical Frequency, Vertical Linearity, Focus

MISCELLANEOUS
- Operating Temperature: 0 to 55 Degrees C
- Agency Compliance: U.L., C.S.A., D.H.H.S. Radiation Performance Std., TUV

RESOLUTION
- Graphic Modes: Std Resolution 640 x 200, Mid-Resolution 640 x 400, VGA 640 x 480, SVGA 800 x 600
- Video Bandwidth: 25 MHz Typical

Wells-Gardner Warranty: 1 Year

Part Number		Model No.	Price per ea.
49-0681-00	19" VGA/SVGA Horizontal Mount	WGM1930 - Series	511.90
49-0833-00	33" Mid-resolution Universal Mount	WGM3331 - Series	1,336.95
49-0831-00	33" VGA Universal Mount	WGM3332 - Series	1,263.50

© HAPP CONTROLS

WELLS-GARDNER MONITORS

- ISO 9001 Certified
- High Clarity with True Colors
- Standard Wells-Gardner 1 year warranty
- UL listed
- C.S.A. Certified
- Prismatic Color

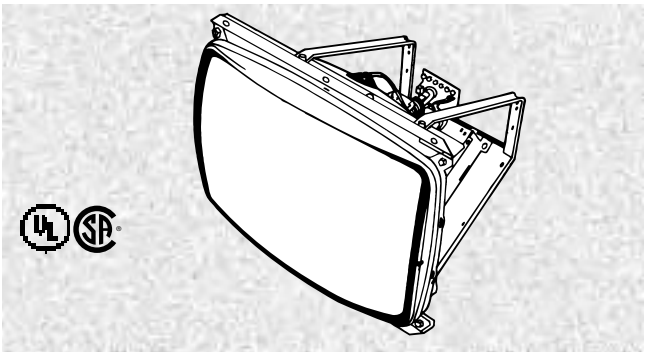

WELLS-GARDNER SERIES U3100 MONITORS

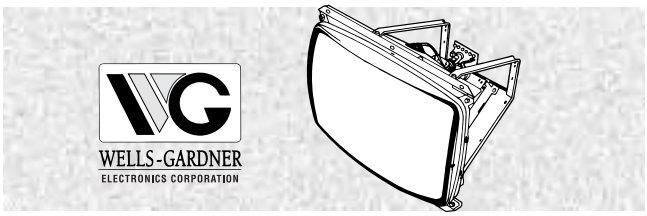

For the Gaming, PC and Industrial Market

SPECIFICATIONS
- CRT Size (Diagonal Measure): 14", 19"
- PHOSPHOR Type: P22
- CRT Etch: Polished Faceplate
- Dot Trio Spacing: 0.28mm (14"), 0.71mm (19")

INPUT SIGNALS
- Input Connector: 15 pin D-sub high density male; VGA compatible
- Video Type: RGB Analog
- Video Input Impedance: 75 Ohm: 470 Ohm optional
- Video Level: 0.7 Volts Peak-To-Peak
- Sync Type: Standard VGA/SVGA TTL sync; composite optional
- Sync Input Impedance: 470 Ohm (H sync), 1K Ohm (V sync)
- Horizontal Sync Frequency: 31.5, 35.5 kHz
- Vertical Sync Frequency: 56 to 87 Hz

Part Number		Price per ea.	L/100
43-0778-00	AMP Terminal Male for use on Wells Gardner 3-pin Power Connector Amp Ref. 350690-1	.24	.19
43-0779-00	AMP 3 Circuit Mate-N-Lock Plug for use on Wells-Gardner 3-pin Power Connector Amp Ref. 1-480700-0	.53	.43

LIGHT OUTPUT
- 40 fl typical

GEOMETRY
- Horizontal linearity: +/- 5%
- Vertical linearity: +/- 5%
- Picture size regulation: 2%
- Geometric distortion: +/- 2% max

POWER INPUT
- Input Voltage: 90-264 VAC, 50-60 Hz; **No Isolation Transformer Required**
- Maximum Power: 85 Watts

USER CONTROLS
- Remote Controls: Brightness, Contrast, Horizontal Size, Horizontal Centering, Vertical Size, Vertical Centering
- Internal Controls: Horizontal Hold, Vertical Hold, Vertical Linearity, Focus, G2 (screen)

MISCELLANEOUS
- Operating Temperature: 0 to 55 Degrees C
- Agency Compliance: U.L., C.S.A., D.H.H.S. Radiation Performance Std., TUV

RESOLUTION
- Graphic Modes: VGA: 640 x 200, 640 x 350, 640 x 480 SVGA: 800 x 600, 1024 x 768 (interlaced)
- Video Bandwidth: 22 MHz Typical

Wells-Gardner Warranty: 1 Year

Part Number		Model No.	Price per ea.
49-0829-00	19" VGA/SVGA Horizontal Mount	WGM1931-Series	481.75

WELLS-GARDNER SERIES K7000 REFURBISHED MONITORS

- Like New - Refurbished by Wells-Gardner
- 90 Day Warranty
- Call for availability

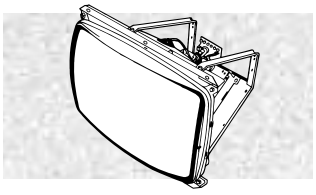

Part Number		Model No.	Price per ea.
49-0731-00	13" Std Resolution Horizontal Mount	WGR1370 - Series	240.90
49-0729-00	19" Std Resolution Horizontal Mount	WGR1970 - Series	251.75
49-0727-00	19" Std Resolution Universal Mount	WGR1973 - Series	434.40

REPLACEMENT MONITOR FOR MERIT

- Monitor replacement for use in Merit Mega touch XL or Megatouch machines
- Monitor only, touch screen sold separately

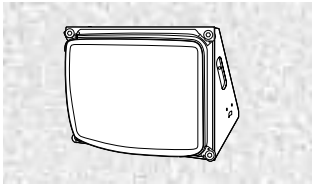

Part Number		Price per ea.
49-3021-00	13" VGA/SVGA for Merit Megatouch XL Games, WGM1431 - Series	542.05
49-0827-00	13" CGA for Merit Megatouch Games, WGM1372 - Series	360.20

WELLS-GARDNER MONITORS

- ISO 9001 Certified
- High Clarity with True Colors
- Standard Wells-Gardner 1 year warranty
- UL listed
- C.S.A. Certified
- Prismatic Color

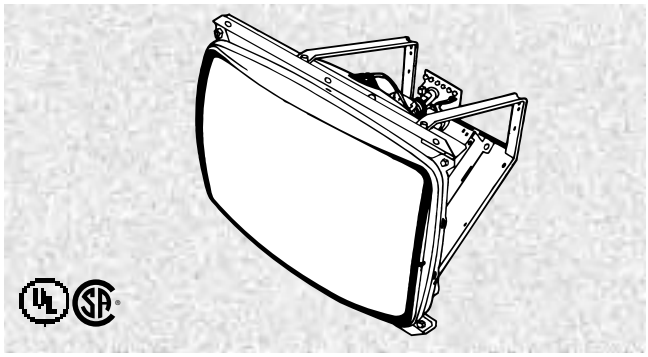

WELLS-GARDNER SERIES D9200 MONITORS

Used on the following Namco Games:
500 GP Simulator, MotoCross Go! Simulator, Time Crisis Deluxe Upright
Incredible Technology Big Buck Hunter,
Golden Tee Fore® 2002 & 2003

SPECIFICATIONS

- CRT size (diagonal measure): 27" or 33"
- Phosphor type: P22
- Color Temperature: 8500°K +/- 500°K
- Dot trio spacing: 0.83 mm

INPUT SIGNALS

- Input connector: CGA/EGA: 0.156 center header VGA: 15 pin D-sub high density male
- Video input impedance:, CGA/EGA/VGA: 4.7K Ohm, VGA: 75 Ohm
- Video level: CGA/EGA: 2.2 Vp-p, VGA 0.7 Vp-p
- Video type: RGB analog
- Sync type: TTL sync; separate or composite, negative or positive
- Sync input impedance: 2.2K Ohm (H sync and V sync)
- Horizontal sync frequency: 15.75 to 31.5 Khz
- Vertical sync frequency: 45 to 90 Hz

LIGHT OUTPUT

- 60 Ft-L min. (center block) Geometry
- Horizontal linearity: +/- 7%
- Vertical linearity: +/- 5%
- Picture size regulation: +/- 2%
- Geometric distortion: +/- 2% max

POWER INPUT

- Input voltage: 90-264 VAC, 50-60 HZ;
- No isolation transformer required
- Maximum power: 150 watts

RESOLUTION

- Graphics modes: CGA: 640 X 200
  EGA: 640 X 400
  VGA: 640 X 480
- Video bandwidth: 25 MHz

USER CONTROLS

- PC bus remote controls: brightness, contrast, horizontal size, horizontal position, vertical size, vertical position, pin cushion, trapezoid, color temperature, factory setup recall
- Internal controls: Sub-brightness, focus, G2 (screen), raster tilt, HV adjust

MISCELLANEOUS

- Operating temperature: 0 to 55 degree C
- Agency compliance: UL6500, CSA, CB (IEC65), DHHS, CE
- Push button control board
- On-screen display

Wells-Gardner Warranty: 1 year

Part Number		Price per ea.
49-5203-00	27" Series D9200 Monitor	642.55
49-5203-20	27" Series D9200 Monitor For Golden Tee® Fore 2002 & 2003	597.70
49-0831-00	33" Digital Universal Mount	1,263.50
49-1957-00	32" Series D9200 Monitor For Golden Tee® Fore 2004	1,132.15

Visit Our Web Site:
happcontrols.com
for *NEW* Product Updates!!

WELLS-GARDNER MONITOR PARTS

Part Number	WG No.	Generic No.	Description	Price per ea.
49-1751-00	009A2970-002		Width Coil	8.15
49-1038-00	009A2854-001	L1	Width Coil	12.25
49-3079-00	009A2911-002		Yoke for 25" K7000 Std. Res. Monitor	59.05
49-5176-00	009A2987-001		Yoke for U2000 Monitor	50.95
49-5233-00	009A2988-001		Yoke for 25" K7400 Monitor	45.85
49-1768-00	009A2838-002		27 uh Coil	1.55
49-1744-00	013X1331-00		Control Board Cable Assembly	9.15
49-0024-00	016X0208-001	F101	AGC Fuse 3A Fast Blow	.36
49-4039-00	025A1447-001		Power Supply for 27" U3000 Monitor	91.75
49-5025-00	025A1447-002		Power Supply for 33" Monitor	91.75
49-5200-00	025A1468-001		Control Board for K7400 Monitor	31.00
49-6136-00	025A1497		Chassis for 17" U3000	171.65
49-5272-00	025A1522-001		Chassis for 19" Monitor with Neckboard	160.55
49-5179-00	038A7927-000		Power Cord With 3-pin Connector	13.05
49-5297-00	038A7844-000		Heat Sync & Transistor	36.05
49-1028-00	040X0639-006	VR8	Resistor Trim Pot 2K Ohm .3W	3.55
49-1052-00	040X0639-008	VR700	Trim Pot 10K Ohm .3W	4.65
49-1051-00	040X0639-014	VR101	Trim Pot 1K Ohm .3W	3.30
49-1249-00	040X0653-002	VR1	Resistor Control 500	9.95
49-1252-00	040X0653-003	VR201, 203, 205	Resistor Control 2K	4.00
49-1025-00	040X0653-005	VR2, VR3	Resistor Control 10K	3.70
49-1027-00	040X0653-006	VR5	Resistor Control 200K	2.95
49-1047-00	040X0653-008	R543, 544, 545	Trim Pot 1K Ohm .5W	2.60
49-1042-00	040X0703-004	VR900, VR904	Trim Pot 5K Ohm .5W	3.15
49-1043-00	040X0703-005	VR903, VR905	Trim Pot 10K Ohm .5W	3.15
49-1044-00	040X0703-006	VR901	Trim Pot 20K Ohm .5W	4.30
49-1045-00	040X0703-007	VR906	Trim Pot 100K Ohm .5W	3.70
49-1046-00	040X0703-008	VR902, VR907	Trim Pot 200K Ohm .5W	3.40
49-1325-00	040X0705-001	VR101	Resistor 10K Ohm	2.60
49-1322-00	040X0705-002	VR104	Resistor 200 Ohm	1.95
49-1324-00	040X0705-003	VR102	Resistor 2K Ohm	4.85
49-1321-00	040X0705-004	VR105	Resistor 500K Ohm	2.60
49-1323-00	040X0705-005	VR103	Resistor 25K Ohm	4.10
49-1248-00	040X0705-006	VR106	Resistor 500 Ohm	3.70
49-5382-00	040X0711-002		Trim Pot	3.85
49-1250-00	043X0476-002	R89	Resistor 3.9K 5% 5W MO	1.80
49-1320-00	043X0481-003	R301	Resistor 220 Ohm 15W WW	1.75
49-7022-00	043X0484-006		Resistor	10.35
49-1283-00	043X0485-001	RT101	Thermistor	4.70
49-3107-00	043X0486-002	R303	Resistor	3.45
49-1032-00	045X0569-008	C56	Capacitor Lyt 22UF 160V	2.40
80-0079-00	045X0569-011	C57	Capacitor 47 MFD 160V	2.10
49-1040-00	045X0580-026	C104	Capacitor 47F 200V	4.35
49-5046-00	046X0536-021		Capacitor, 1000PF	1.35
49-4042-00	046X0536-035		Capacitor, .0036 Microfared, 1600V	3.15
49-1031-00	046X0536-046	C38	Capacitor .39 UF 5% 200V	4.95
49-1030-00	046X0551-003	C36	Capacitor PP6100 2% 1500V	5.40
49-5248-00	046X0552-001		Capacitor	4.60
49-1286-00	047X0786-519	C727	Capacitor 2200PF 5% 50VP	.28
49-0692-00	052X0127-001		Flyback Transformer	84.35
49-1039-00	052X0131-001	T2	Transformer, Horiz. Driver	4.40
49-0801-00	053X0589-001		Flyback Transformer	83.20
49-1773-00	053X0601-001		Flyback Transformer	61.15
49-3091-00	053X0632-001		Flyback Transformer	52.60
49-5351-00	053X0634-001		Flyback Transformer	66.70
49-4037-00	053X0639-001		Flyback Transformer	84.35
49-0812-00	053X0641-001		Flyback Transformer	65.85
49-1772-00	053X0674-001		Flyback Transformer	61.15
49-5163-00	054A0583-002		Neck Board for 27" U3000 Monitor	66.50
49-5166-00	054A0756-001		Power Supply Board for U3000 Monitor	142.25
49-1340-00	054A2193-021		Chassis Board	271.15
49-5097-00	054A3001-007		Chassis for 19" 19K3001 Monitor	247.80
49-5164-00	054A3003-014		Chassis for 27" U3000 Monitor	327.70
49-4009-00	054A3004-002		Chassis for 17" U3000 SVGA Monitor	307.95
49-5285-00	054A3004-005		Chassis for 17" U3000 Monitor with Neckboard	218.45
49-4008-00	054A3004-006		Chassis for 17" U3000 Monitor with Touch screen	197.65
49-5298-00	054A3005-001		Chassis for 17" U3000 Monitor	316.20
49-5026-00	054A3101-003		Chassis Board	340.85
49-5281-00	054A3101-008		Chassis for 14" U3000 Monitor	294.95
49-3039-00	054A3102-001		Chassis Board	272.25
49-2049-00	054A3201-005		Chassis Board	290.25
49-0724-00	054A5191-001		Chassis Board	350.75

WELLS-GARDNER PARTS (CONTINUED)

Part Number	WG No.	Generic No.	Description	Price per ea.
49-0823-00	054A7200-001		Chassis Board	211.35
49-0733-00	054A7201-001		Chassis Board	213.25
49-1336-00	054A7401-001		Chassis Board	296.35
49-5031-00	054A7401-002		Chassis Board	296.35
49-4036-00	054A7501-002		Chassis Board	322.50
49-5032-00	054A7501-003		Chassis Board	296.35
49-1788-00	054A7600-004		Chassis for 39K7601	265.75
49-0690-00	054A7901-012		Chassis Board	238.50
49-1765-00	054A9203-001		Chassis Board with Neck Board for 33" D9200	300.85
49-1295-00	066X0040-017	Z702	Zener Diode 13V 1W	.84
49-1296-00	066X0040-020	Z705	Zener Diode 9.1V .5W	.59
49-1297-00	066X0040-031	Z802	Zener Diode 24V .5W	.43
68-0459-00	066X0040-046	Z601	Diode 1N5242B	.53
68-0451-00	066X0070-001	D200-D202	Diode 1N914B	.44
49-1041-00	066X0071-001	D116, D117, D602	Diode 1N4001	.34
68-0455-00	066X0075-001	D014	Diode 1N4005	.36
49-3109-00	066X0090-001	D302	Diode	1.65
49-5122-00	066X0091-001		Rectifier	3.50
49-1278-00	066X0094-001	D100-D103	Diode 600V	.71
49-1288-00	066X0095-001	D105	Diode 1N4007	.43
49-1245-00	066X0113-501	D25	D1 Boost	1.15
49-1289-00	066X0126-002	D107	Diode MUR490	5.45
49-1290-00	066X0126-005	D708	Diode MUR490 900V 4A	4.70
49-1048-00	066X0135-001	D101-D104	Diode 1N5406	.84
49-1282-00	066X0143-001	D704	Diode DD20R	11.45
49-1285-00	086X0074-001	Q601	Transistor 2SD525R	8.35
49-1298-00	086X0075-001	Q602	Transistor 2SB595R	3.90
67-0407-00	086X0113-501	Q601, 602, 700	Transistor 2N3904	.56
67-0409-00	086X0114-501	Q509, 510, 511	Transistor 2N3906	.56
49-4013-00	086X0127-001		Transistor	.96
67-0400-00	086X0147-501	Q102	Transistor MPSA42	.56
60-0073-00	086X0172-001	Q106	Transistor LM317T	2.75
49-1246-00	086X0184-001	Q201, 202	Control 10K Ohm	3.00
49-1034-00	086X0185-501	Q703, 708	Transistor 2SC2482	10.65
49-1035-00	086X0186-001	IC1	IC Video UPS 1397NEC	20.35
49-1036-00	086X0187-001	IC2	IC Horz/Vert LA7823	32.25
60-0601-00	086X0188-001	IC4	Reg IC STR3123	19.95
49-1318-00	086X0189-001	IC3	IC Vert. Output UPC1378	12.05
49-4057-00	086X0190-001		Transistor	17.65
49-1049-00	086X0257-001	U101	IC UC3842AN	3.85
49-1261-00	086X0270-001	U500	IC LM1203N Video	14.90
49-1050-00	086X0274-001	U701	IC LA7850 Horizontal	12.45
49-1291-00	086X0286-001	Q704	Transistor 2SC3686	12.35
67-0601-00	086X0287-001	Q501, 503, 505	Transistor 2SC3782	3.90
49-1313-00	086X0289-001	ZD101	Voltage Ref 30V	1.55
49-1284-00	086X0290-001	Q500, 502, 504	Transistor 2SC3950	4.80
49-1299-00	086X0295-001	U300	IC 74LS156 Demult	2.55
49-5177-00	086X0302-001		Regulator	17.65
49-1310-00	086X0313-001	U302	IC 74LS86	3.15
49-1312-00	086X0326-001	U601	IC TDA1771	7.55
49-1311-00	086X0333-001	U702	IC Quad SN74LS136N	2.00
49-1306-00	086X0334-001	Q101	Transistor FET, SSP6N60	18.75
49-1292-00	086X0335-001	Q709	Transistor 2N4403	3.60
49-1309-00	086X0338-001	U303	IC 74LS123	6.25
49-1308-00	086X0347-001	U600	IC TDA1175 Vertical	17.65
49-3118-00	088X0350-001		Picture Tube	331.25
49-5266-00	088X0399-001		Picture Tube for 13" Monitor	121.25
49-5034-00	088X0407-506		Picture Tube	192.45
49-5234-00	2ARAD103-001		Diode	2.35
49-1927-00	2ATFT1415-002		Replacement FLyeback Transformer for Wells Gardner	66.25
49-1772-00	2C1-439T-002-11		Flyback for U3100	61.15
49-5044-00	340X5102-731		Resistor, 1 Ohm	.99
49-1326-00	340X5689-333	R213	Resistor .68 Ohm 5% 2W	.81
49-3127-00	420X5102-324		Resistor	1.75
49-3128-00	420X5681-315		Resistor	.86
49-1280-00	421X2672-221	R103	Transistor 26.7K 1%	3.15
49-6133-00	P804		Control Board	13.55
49-1755-00	P828&P583		17"Chassis w/Neck Board	178.45
49-3119-00	RAM1507-001		Transistor	7.25
49-5039-00	S01J0000-00F		Horizontal Update Kit for 25" U5000	21.10

© HAPP CONTROLS

NEOTEC MONITORS

NEOTEC rounds out this all-star line up with some of the best monitors available on the marketplace today. NEOTEC's main target market has been the computer monitor industry. The advanced technology in computer monitors make these a higher quality monitor, with more resolution and greater graphic detail. Again, we at Happ Controls are proud to distribute the following top quality, 1st original monitors by NEOTEC.

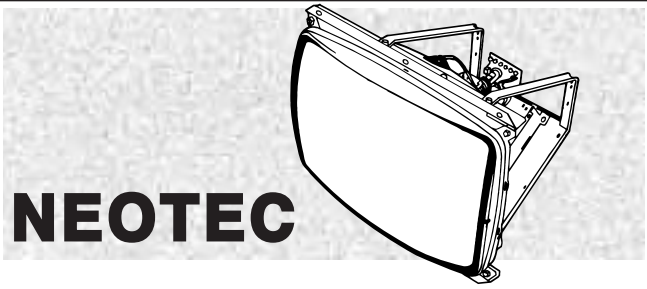

NEOTEC 19" UNIVERSAL MOUNT MONITOR

- Standard resolution
- "A"grade monitor
- Universal mounting bracket
- Open frame design
- Rear mount control board
- No isolation transformer required
- Call for mounting dimensions and schematics
- Model NT-1915

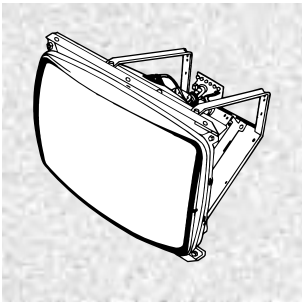

Part Number		Price per ea.
49-0543-00	NEOTEC 19" Universal Mount Monitor	420.60

REFERENCE CHART FOR 49-0543-00

PICTURE TUBE	19" CRT, 0.74 mm Dot Pitch
SIGNAL TYPE	RGB SEPARATE 1.0 - 4.0 V p-p
VIDEO BAND WIDTH	15 MHz
FREQUENCY	15.75 KHz
RESOLUTION	560 x 240
LINEARITY	±5%
POWER SUPPLY	120 - 220 VAC, 50 - 60 Hz
POWER CONSUMPTION	70W
LINE VOLTAGE REGULATION	1%
EXTERNAL USER CONTROLS	Brightness, Contrast, H-position, V-size, V-position, V-hold, Pincushion
WEIGHT	43 lbs.

NEOTEC 25" EGA MID RES. UNIVERSAL MOUNT MONITOR

- Medium resolution
- "A"grade monitor
- Universal mounting bracket
- Open frame design
- Rear mount control board
- No isolation transformer required
- Call for mounting dimensions and schematics
- Model NT-2501

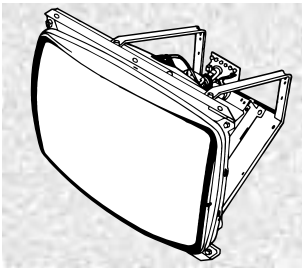

Part Number		Price per ea.
49-0540-00	NEOTEC 25" EGA Mid Res. Universal Mount Monitor	563.60

REFERENCE CHART FOR 49-0540-00

PICTURE TUBE	25" CRT, 0.82 mm Dot Pitch
DISPLAY COLORS	Analog 1.0 - 4.0 V p-p Positive
SYNC. SIGNAL	TTL Positive or Negative
BAND WIDTH	30 MHz
FREQUENCY	24.8 KHz
RESOLUTION	640 x 350
POWER SUPPLY	120 - 220 VAC, 50 - 70 Hz
POWER CONSUMPTION	90W
EXTERNAL USER CONTROLS	Brightness, Contrast, H-size, H-position, V-size, V-position, V-hold, Pincushion
WEIGHT	75 lbs.

NEOTEC 27" EGA MID RES. UNIVERSAL MOUNT MONITOR

- Medium resolution
- "A" monitor
- Universal mounting bracket
- Open frame design
- Rear mount control board
- No isolation transformer required
- Call for mounting dimensions and schematics
- Model NT-2701

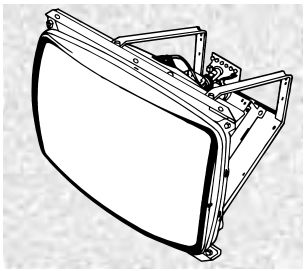

Part Number		Price per ea.
49-0546-00	NEOTEC 27" EGA Mid Res. Universal Mount Monitor	657.60

REFERENCE CHART FOR 49-0546-00

PICTURE TUBE	27" CRT, 0.84 mm Dot Pitch
SIGNAL TYPE	RGB Separate 0.7 V p-p (1.0 - 4.0 V p-p)
SYNC. SIGNAL	TTL Positive or Negative
VIDEO BAND WIDTH	30 MHz
FREQUENCY	24.8 KHz
RESOLUTION	640 x 350
DISPLAY AREA	543.56 x 407.67 (mm), 21.4 x 16.05 (inch)
POWER SUPPLY	120 - 220 VAC, 50 - 70 Hz
POWER CONSUMPTION	115W
EXTERNAL USER CONTROLS	Brightness, Contrast, H-size, H-position, V-size, V-position, V-hold, Pincushion
WEIGHT	85 lbs.

NEOTEC 27" EGA MID RES. MONITOR FOR USE IN GOLDEN TEE FORE" GAMES

- Simply drops into existing Golden Tee Fore® 2002 dedicated game cabinets
- Medium resolution
- "A" monitor
- Universal mounting bracket
- Open frame design
- No isolation transformer required

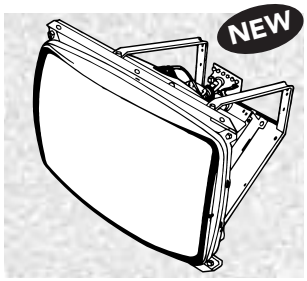

Part Number		Price per ea.
49-0546-10	NEOTEC 27"EGA Mid Res. Monitor for use in Golden Tee Fore® Games	722.65

Visit Our Web Site:
happcontrols.com
for **NEW** Product Updates!!

REFERENCE CHART FOR 49-0546-10

MODEL	NT-2701
PICTURE TUBE	27" CRT, 0.84 mm Dot Pitch
RESOLUTION	640 x350
SYNC. SIGNAL	TTL Positive or Negative
VIDEO BAND WIDTH	30 MHz
FREQUENCY	24.8KHz
RESOLUTION	640 x350
DISPLAY AREA	510 x 385 (mm), 20.07 x 15.15 (inch)
POWER SUPPLY	120 - 220 VAC, 50 - 60 Hz
POWER CONSUMPTION	115W
OPERATING TEMPATURE	0° C to 40° C
STORAGE TEMPERATURE	-20° C to 60° C
EXTERNAL USER CONTROLS	Brightness, Contrast, H-size, H-position, V-size, V-position, V-hold, Pincushion
WEIGHT	85 lbs.
SAFETY STANDARD	UL, CSA, TUV
EMI Safety Standard	FCC CLASS B

UNIVERSAL VIDEO CONVERTER™ (UVC)

- Run any monitor with any PC signal
- Universal Video Converter (UVC) is revolutionary new adapter that allows a PC VGA signal to display on any low or medium resolution coin-op monitor!
- Input Resolutions: 640 x 480, 800 x 600, 1024 x 768
- Output Resolutions: Low Res (CGA) 15 kHz, MED RES (EGA) 25kHz
- Automatically detects the incoming video signal
- Properly scales and converts to the desired timing and output
- Amazing display output quality
- Requires no change to your existing hardware or software
- The UVC is completely transparent to the application
- Compatible with: Wells Gardner K7000, K7200, K7400, K7500, D9200, U2000; Atari/Disco; Atari/Sanyo; Neotec NT2701; Sampo KGR1901; and many more
- DBH-15 VGA Input
- 0.156" Molex header output
- +12V/+5v DC Input (Standard PC HDD Power Connector)
- Plug & Play – No software required
- Patent Pending
- Universal Video Converter is a trademark of UltraCade Technologies. © 2003 All Rights Reserved.

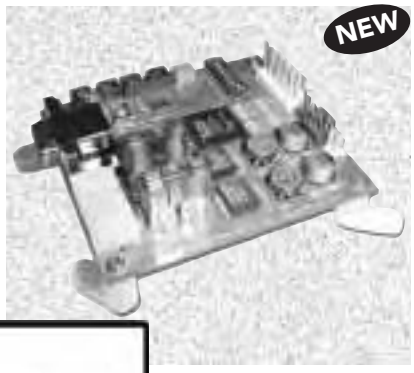

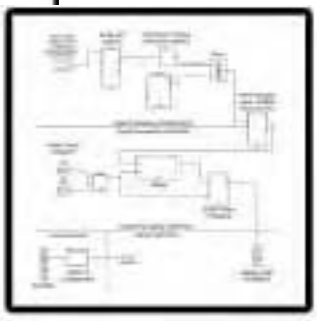

Part Number		Price per ea.
96-0583-00	Universal Video Converter™ (UVC)	225.00

3M MICROTOUCH™ M150 FPD TOUCH MONITOR

NEW

A New Benchmark in Flat Panel Touch Displays
3M Touch Systems envisioned a touch monitor that would set a new standard of excellence. By combining current and future touch technologies with a monitor form factor that is a breakthrough in display design, a new benchmark for touch displays has been created. This new design combines patent-pending features with the quality, accuracy and durability of 3M touch screen technology to create an innovative touch display solution. It's what you'd expect from a leader in innovation. It's what you'd expect from 3M. MicroTouch ClearTek capacitive touch technology provides accuracy and sensitivity to the user's touch while offering outstanding durability and resistance to contaminants such as dirt, liquids, and harsh chemicals.

- 15" display
- Maximum touch stability
- Display angle adjustable from 0 to 60 degrees
- Positive locking adjustment feature
- VESA mounting capability
- Cable management designed in
- USB Controller option

MicroTouch™ 3M

FUNCTIONAL FEATURES

LCD Technology	TFT, Active Matrix
Display Colors	262,144
Pixel Pitch	.297 mm
Brightness w/o touch screen	250 cd/m^2 typical
Brightness with touch screen (max.)1	215 cd/m^2 typical
Contrast Ratio	300:1
Response Time	35 ms typical
Viewing Angle	Horizontal: +/-60 degrees typical Vertical: +40/-60 degrees typical
Front Panel Buttons	Menu, Select, Adjust, Power
On Screen Display Controls	Brightness, Contrast, Horizontal/Vertical Position, Clock, Phase, Auto Phase, Color,
Maximum Resolution	1024 x 768
Number of Allowable Unlit Pixels	10
Operating Environment	Operating Temperature: 0 to 40 degrees C 90% Relative Humidity, Non-condensing
Storage Environment	-25 to +60 degrees C

PHYSICAL FEATURES

Physical Dimensions (WxHxD)	408 x 398.3 x 258.7 mm
(Depth includes base)	16.1 x 15.7 x 10.2 inches
Display Area (WxH)	304.1 x 228.1 mm 12 x 9 inches
Video Cable Connector	15-pin D-sub
Power Supply	12V DC Power Supply
Power Savings2	DPMS, VESA Compliant
Power Consumption	<28W, Normal Operation
Backlight Life	50,000 hrs. typical
Weight (Net)	7.4 kg/16.3 lbs.
Agency Approvals	FCC B, CE, UL/cUL, C-Tick, VCCI
Mounting Options	VESA mounting compatible, 75mm
Multimedia	Equipped with speakers in base
Color Option	Available in Black
Controller Option3	Serial, USB
Warranty	3 Years FPD 5 Years Touch Sensor and Components

Part Number		Price per ea.
49-1889-00	MicroTouchTM M150 FPD Touch Monitor with serial cable connector	948.60
49-1889-10	MicroTouchTM M150 FPD Touch Monitor with USB cable connector	948.60
49-1889-15	MicroTouchTM M150 FPD Touch Monitor with serial cable connector and resistive touch screen	948.60
49-1979-00	Replacement Chassis for 49-1889-00	862.95

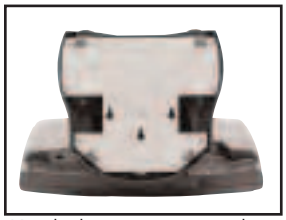

Key hole pattern provides additional security.

VESA Mounting Compatibility

TOUCH SCREENS AND MONITORS

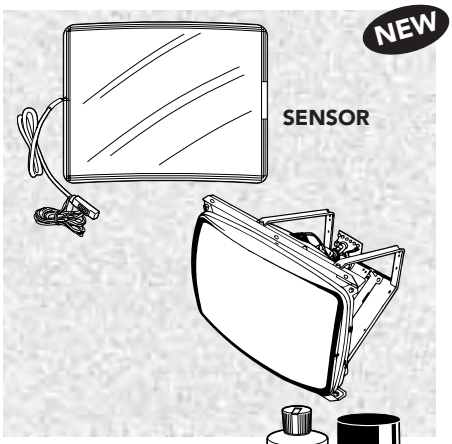

See pages 101 and 104 for cleaners safe for use on touch screens (29-1018-00 Glass Cleaner and 29-1030-00 Touchdown Cleaner).

Part Number	Model Number		Price per ea.
49-3068-00	002803A-145	13" ELO Touch screen for Merit Megatouch	574.60
49-5099-00	EC9850-01	15" Touch screen for Merit Easy Max LCD Monitor	373.95
49-3026-00	337235-000	13'" ELO Spherical Intellitouch Clear Touch screen	324.80
49-3089-00	276791-00	19" ELO Touch screen for VLC Units, Antiglare Spherical	591.60
49-5294-00	366503-000	19" ELO Spherical Clear Intellitouch for VLC	586.80
49-3080-00	366-503-000	19" ELO Touch screen, Spherical Saw Clear	440.85
49-0828-00	WGT1972-U2TS53H	19" 19K7200 Wells-Gardner monitor with Elo touch screen assembly for VLC	782.85
49-0824-00	WGT1930-MITS14E	19" Wells-Gardner VGA monitor with MicroTouch sensor Taped	782.85
49-0827-00	WGM1372-MIAS30F	13" K7200 Wells-Gardner monitor for Mega Touch without touch screen	360.20
49-0806-00	WGT1372-MITS30F	13" K7200 Wells-Gardner monitor with touch screen for Merit Megatouch	716.60
49-0824-10	WGT1972-H0GS73L	19" K7200 Wells-Gardner monitor with MicroTouchscreens Bonded VLC	874.45

MICROTOUCH TOUCH SCREENS

Extended Durability for High-use Applications

MicroTouch™ ClearTek™ capacitive touch screens, manufactured by 3M Touch Systems, are the preferred touch solution for applications that require fast and accurate touch performance. The flat capacitive Profile sensor incorporates advanced construction and production techniques that result in a thin, sleek design which provides easy installation into flat panel displays and flat CRTs. The robust touch characteristics of ClearTek are attributed to its transparent overcoat, which significantly increases the physical durability of the surface by allowing it to resist scratches and abrasions. Popular applications include kiosks, ATM installations, point-of-sale, industrial equipment, gaming machines, and vending.

Making the Difference

ClearTek capacitive touch technology provides accurate and sensitive response to the user's touch while offering outstanding durability. A ClearTek capacitive touch screen provides scratch-resistance and contaminant-resistance to dirt, liquids, and harsh chemicals. A ClearTek sensor with Industrial Etch has been tested in a laboratory environment to withstand over 225 million mechanical touches without noticeable degradation to the surface.

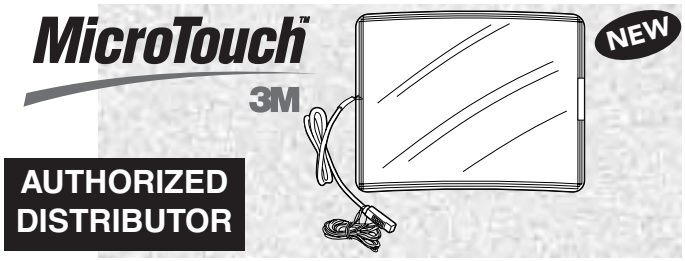

Features

- Transparent coating significantly increases durability by resisting scratches and abrasions
- Performance unaffected by everyday contaminants in the environment
- Accurate and fast touch response
- Narrow border for easy integration
- Connects to the new EX II electronics platform
- ClearTek capacitive touch screens available in both flat and curved
- Taped wires

Part Number	Description	MicroTouch Ref. No.	Price per ea.
49-7032-00	13"/14" Touch Screen	13-1321-01NL	279.90
49-7031-00	17" Touch Screen	13-1611-01NL	300.70
49-5352-00	18" Touch Screen	13-2061-01NL	331.95
49-7030-00	19" Touch Screen	13-1931-01NL	331.95
49-6150-00	27" Touch Screen	13-1913-01NL	620.10
49-6199-00	13" Touch Screen For Merit Radeon Force	13-1431-01NL	422.40

REPLACEMENT TOUCH SCREEN CONTROLLERS

- For IGT, Williams, Atronic, Wells-Gardner, Tatung, Pot-Of-Gold, Kristel

Part Number		Price per ea.
49-5238-00	IGT PCB for use with DB9 and 12-pin Connector	286.15
49-1746-00	MicroTouch PCB Assy for Williams, Atronic, Wells-Gardner, Tatung, Kristel	117.30

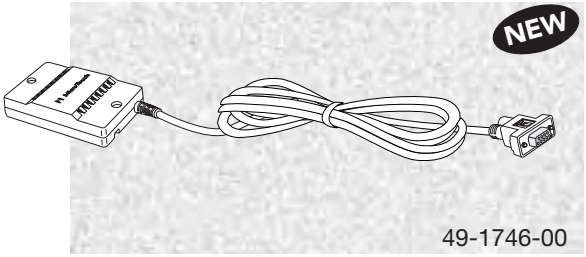

© HAPP CONTROLS

TOUCH SCREEN TAPE KIT

- Contains everything needed to tape a 13" or 19" touch screen
- Includes black foam tape, black double face tape, black cloth gasket and alcohol

Part Number		Price per ea.
49-4035-00	Touch Screen Tape Kit	24.95

RUBBER ADHESIVE TAPE FOR TOUCH SCREENS

- Holds the mask to the monitor
- Double sided, black rubber adhesive
- 1/2" wide x 1/32" thick
- Sold per roll, 36 yards per roll

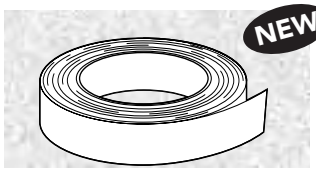

Part Number		Price per ea.
43-1104-10	Rubber Adhesive Tape for Touch Screens	12.05

FOAM ADHESIVE TAPE FOR TOUCH SCREENS

- Provides a "dust gasket" around monitor
- Single sided, gray low density foam with acrylic adhesive
- Sold per roll, 18 yards per roll

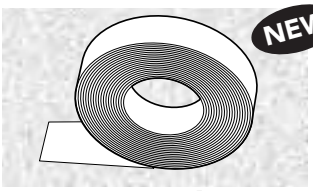

Part Number		Price per ea.
43-1103-10	Foam Adhesive Tape 1/2"W x 1/4" Thick	16.90
43-1103-34	Foam Adhesive Tape 3/4"W x 1/4" Thick	16.90

ACTETATE TAPE FOR TOUCH SCREENS

- Used to seal the touch screen and the CRT
- 1" wide black tape
- Adhesive on one side
- Sold per roll, 216 ft per roll

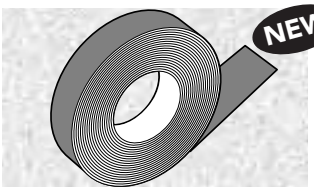

Part Number		Price per ea.
49-5195-00	Acetate Tape For Touch Screens	60.35

TOUCH SCREEN FOAM TAPE

- The tape of choice!
- Foam sealing tape is used to seal the entire overlay at the edges
- Save time and tape - because the tape is wide you only have to make one revolution around screen
- .032" thick
- Color: Black
- Sold per roll, 50 ft per roll

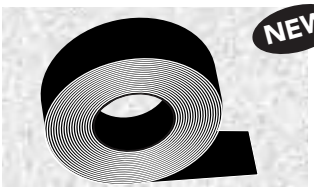

Part Number		Price per ea.
49-5196-00	Touch Screen Foam Tape	52.00

REPLACEMENT MONITOR CHASSIS BOARDS

- For Happ, Neotec, Electrohome and Wells-Gardner monitors

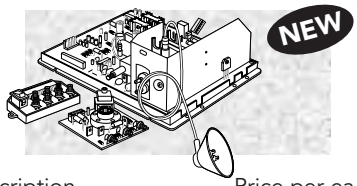

Part Number	Ref. No.	Description	Price per ea.
49-2042-00	—	Happ 13" Monitor 49-0554-00	120.50
49-2042-10	—	Happ Controls Vision Pro 13"	118.10
49-2043-00	—	Happ 19" Monitor 49-0493-00	86.70
49-0556-00	G07-CBO	Electrohome 19"	150.55
49-0733-00	054A7201-001	Wells-Gardner 13" K7201 Series	213.25
49-4009-00	054A3004-002	Wells-Gardner 17" U3000 SVGA Used on WMS Gaming	307.95
49-5376-00	A72375	Kristel 17" Used on WMS Gaming	265.25
49-0690-00	054A7901-012	Wells-Gardner 19" K7000 Series	238.50
49-0724-00	054A5191-001	Wells-Gardner 25" U-5000 Mid-Resolution	350.75
49-0823-00	054A7200-001	Wells-Gardner 19" K7200 Series	211.35
49-3039-00	054A3102-001	Wells-Gardner 19"U3000 VGA Series	272.25
49-1336-00	054A7401-001	Wells-Gardner 25" K7400 Series with Neck Board	296.35
49-5229-00	054A7401-010	Wells-Gardner 27" K7400 Series Standard Res.	310.85
49-5032-00	054A7501-003	Wells-Gardner 25" K7501 Series with Neck Board	296.35
49-1340-00	054A2193-021	Wells-Gardner 25" K7500 Series Mid-Resolution with Neck Board	271.15
49-2049-00	054A3201-005	Wells-Gardner 33" Mid-Resolution with Neck Board	290.25
49-5026-00	054A3101-003	Wells-Gardner 33" Monitor with Neck Board	340.85
49-2079-00	270100002	Neotec 27" Mid-Res	332.45
49-1348-00	250100002	Neotec 25" Mid-Res	327.65

ISOLATION TRANSFORMER

- Input 120 volts
- Output 120 volts
- Output power 120 watts
- UL listed

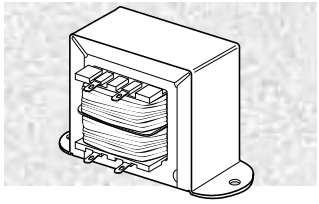

Part Number		Price per ea.	L/25
80-2000-00	Isolation Transformer (UL)	16.90	15.70

WIDTH COIL

- For Electrohome and Wells-Gardner monitors

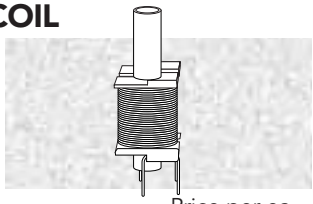

Part Number		Price per ea.
49-0649-00	For Electrohome Monitors C30380-A / ZS-76-04	17.75
49-1038-00	For Wells-Gardner Monitors	12.25

MONITOR REPAIR KITS

- Saves time & money on monitor repairs
- Monitor repair kits take care of picture warping, blacking out, smearing, brightness problems, poor voltage regulation, jail bars, vertical shrinking, etc.
- All kits come with complete instructions

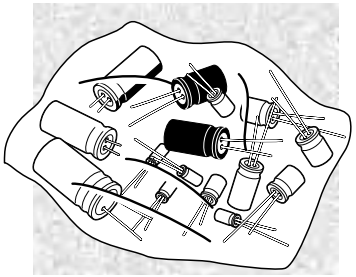

Part Number	KIT No.		Price per ea.
49-0549-401	KIT101	Electrohome GO7-CBO 19"	9.65
49-0729-102	KIT102	Electrohome GO7-FBO 13"	9.65
49-0549-103	KIT103	Electrohome G19-411 13"	9.65
49-0727-01	KIT105	Electrohome G19-CCO 13"/19"	9.65
49-0549-101	KIT201	Wells-Gardner K4600 19"	9.65
49-0549-201	KIT202	Wells-Gardner K4900 19"	9.65
49-0924-00	KIT203	Wells-Gardner K4800 13"	9.65
49-0544-00	KIT204	Wells-Gardner K7000 13", 19", 25"	9.65
49-5070-00	KIT206	Wells-Gardner 19K6100 XY Includes: caps, resistors, diodes and 6 power transistors	22.85
49-0726-01	KIT207	Wells-Gardner K4500 25"	9.65
49-5071-00	KIT220	Wells-Gardner U2000	10.90
49-0293-00	KIT221	Wells-Gardner U5000	12.05
49-5073-00	KIT240	Wells-Gardner K7200	9.65
49-5072-00	KIT270	Wells-Gardner 19K7302	10.90
49-0549-001	KIT300	Happ Controls 13"& 19"	9.65
49-0549-301	KIT301	Nintendo Sanyo 19"	9.45
49-0767-00	KIT302	Nintendo Sharp 19"	9.45
49-5077-00	KIT303	Sanyo 14"	9.65
49-0224-00	KIT501	Wico Videomaster 13" & 19"	9.65
49-0549-502	KIT502	25"Wico Videomaster	9.65
49-5033-00	KIT530	Ceronix # 1492 19"	9.65
49-5075-00	KIT550	Toei 19"	9.65
49-5081-00	KIT602	Sharp OC-1411 13" & 19"	9.65
49-0729-603	KIT603	Sega MC-2000 13" & 19"	9.65
49-0292-00	KIT608	Sharp Image SI-327 27"	9.65
49-0291-00	KIT609	Sharp Image SI-313 13" & SI-319 19"	9.65
49-5385-00	KIT618	Sharp Image SI-325 25" EGA	11.00
49-0549-701	KIT701	Matsushita TM202G 19"	9.65
49-0908-00	KIT801	Hantarex MTC900 19"	9.65
49-0687-00	KIT802	Hantarex MTC9000 19"	9.65
49-5083-00	KIT810	Hantarex Polo	10.90
49-0549-920	KIT920	Pac-Man/MS Pac-Man Eliminates hum bars	9.65
49-5052-00	———	Neotec NT31E 33"	10.90

REPLACEMENT PARTS FOR TATUNG MONITORS

- Various parts

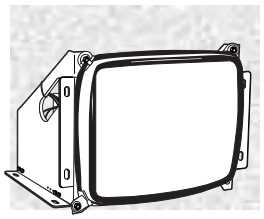

Artwork for Recognition and Does Not Represent Any Specific item

Part Number	Ref No	Description	Price per ea.
49-5191-00	M34AEP60X16	CRT with Yoke for 14" VGA Monitor VS-14428	224.90
49-5208-00	2000007	Neckboard for 14" VGA Monitor 14428	56.20
49-5222-00	9005502	Potentiometer	4.60
49-5221-00	9700008	Transistor D1138	8.05
49-5220-00	9700005	Transistor D669A	10.30

FLYBACK TRANSFORMER

- For use on various monitors

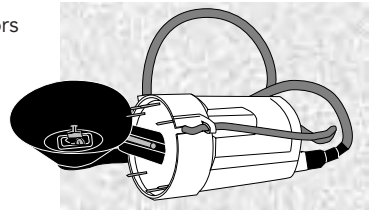

Part Number		Price per ea.
49-0481-00	Electrohome	41.65
49-3097-00	Hantarex "Polo"	41.65
49-5085-00	Hantarex MTC9000 10" Color	40.80
49-0295-00	Happ Controls 13"	41.65
49-0907-00	Kortek 13" and 19"	41.65
49-3031-00	Neotec 25" & 27" Std. Resolution	96.35
49-3041-00	Neotec 25" Mid-Resolution	108.40
49-0719-00	Wells-Gardner 25" U5000, 053X0624-001	76.85
49-0274-00	Wells-Gardner K7000, 053X0528-001	41.65
49-0812-00	Wells-Gardner K7200, 053X0641-001	65.85
49-0801-00	Wells-Gardner K8000, 053X0589-001	83.20
49-3091-00	Wells-Gardner U2000, 053X0632-001	52.60
49-1972-00	Wells-Gardner U3000, 2C1-439T-002-11	112.15

Visit Our Web Site:
happcontrols.com
for **NEW** Product Updates!!

VIDEO BRIGHTENER

- Revitalize your video game with Star Tech Journal's Video Brightener
- Reclaim earnings on those old and faded video monitors
- Enhance gameplay when vibrant colors are once again achieved
- Safe & easy installation
- Fits all 11" to 36" monitors Foreign and Domestic
- Clear precise directions for Wells-Gardner, Electrohome, Masushita, Hantarex, Nanao, Sanyo, Disco, Eygo
- Directions also included for Sony, Hitachi, GE & Toshiba

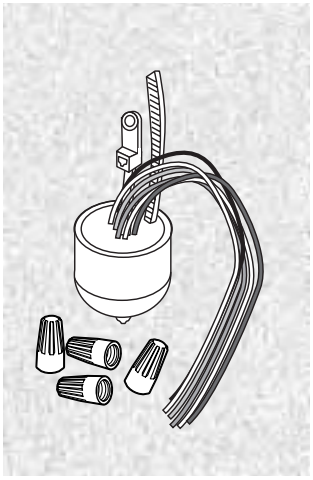

Part Number		Price per ea.
49-0815-00	Star Tech Journal Video Brightener	28.45

GENIE-ONE RGB PATTERN GENERATOR BY WELLS-GARDNER

- Five test patterns
- Tests MDA, CGA, EGA, VGA, SVGA, 8514/A and high resolution monitors
- Powered by 9 volt battery or external AC adaptor (not included)
- Two video connectors: Digital/TTL 9-D and Analog 15-HD
- Weight: 1 lb.
- Size: 1.5" x 3.8" x 5.7"
- Manufactured by Wells-Gardner

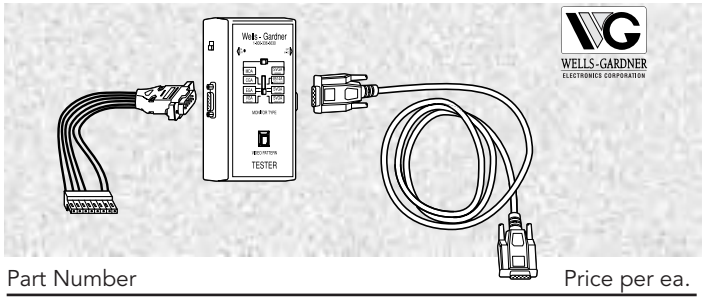

Part Number		Price per ea.
49-0734-00	Genie-One RGB Pattern Generator	331.25

UNIVERSAL COLOR TV ALIGNMENT TOOL KIT

- 5 different alignment tools for all standard adjustments
- All tools are made of Delrin in various colors for easy identification
- Included is the "Extend-it" to adapt each alignment tool for longer reach
- Kit contains 1 each:

  "Extend-it" shaft extension
  Zenith alignment tool
  5" hex wrench
  Hex iron core tool
  Hex core tool
  Double end tool

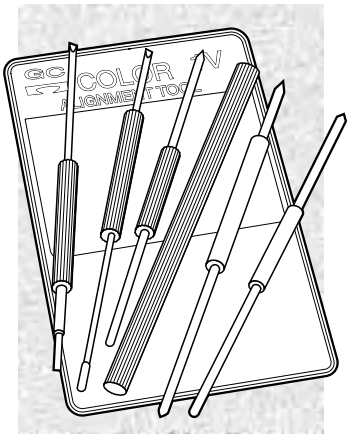

Part Number		Price per ea.
92-0196-00	Universal Color TV Alignment Tool Kit	8.35

FOAM MONITOR BEZELS

- Decorative Dark Gray foam for use with various sized monitors
- Covers the areas outside of the monitor glass to give a clean appearance to any cabinet

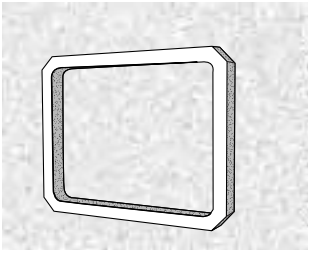

Part Number		Price per ea.
49-0741-00	13" Monitor Bezel, Dark Gray Foam	9.65
49-0927-00	19" Monitor Bezel, Dark Gray Foam	10.90

PLASTIC MONITOR BEZELS

- Decorative black plastic bezel for use with various sized monitors
- Covers the areas outside of the monitor glass to give a clean appearance to any cabinet

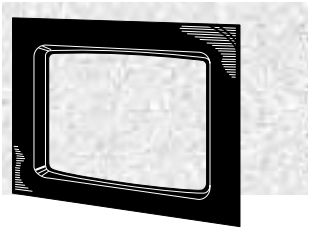

Part Number		Price per ea
49-3090-00	13" Monitor Bezel, Black Plastic	7.25
49-0105-00	19" Monitor Bezel, Black Plastic	13.70
49-0123-00	25" Monitor Bezel, Black Plastic	17.55
49-0106-00	27" Monitor Bezel, Black Plastic	18.15
49-1857-00	27" Flat Screen Monitor Bezel, Black Plastic	15.85

DEGAUSSING COIL

- Eliminates magnetic fields in CRT TV picture tubes or computer monitors as required prior to purity adjustments
- Coil is made to standard industry specifications and is completely encased in 13" diameter molded, high impact ABS plastic housing
- Supplied with 8 foot cord and momentary contact switch that permits de-energizing of coil without unplugging the unit
- Safe to use
- A must for every video repairman
- UL Approved
- 117 VAC, 60 Hz, 2.8 A

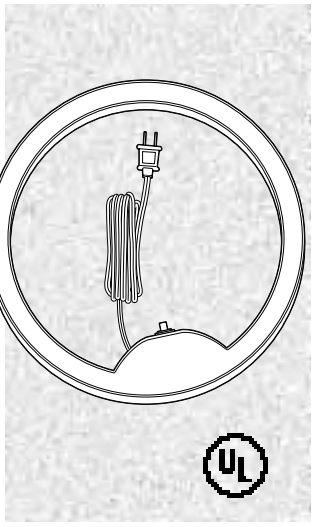

Part Number		Price per ea.	L/6
49-0559-00	Degaussing Coil	60.35	56.70

Power Pro 110W UL, CE POWER SUPPLY

- +5v 15A, +12v 2A, -5v 1A
- UL and CE Recognized
- 110 watts of power
- Tri-colored LED to monitor +5v control: Red = High, Yellow = Low, Green = OK
- Will accept wide #8 terminal
- Dual AC input 115vac/230vac, selectable by jumper
- Easy start-up
- Overload protection
- Black case
- 1 year warranty

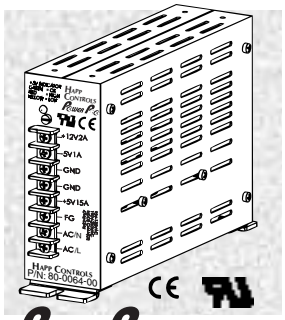

Power Pro

Overall Dimensions

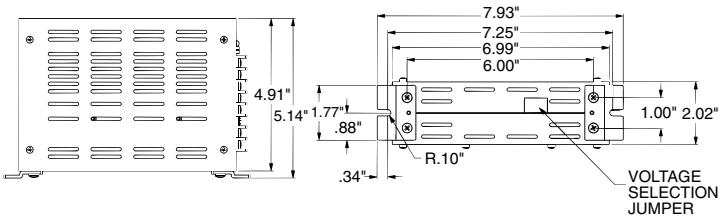

Part Number		Price per ea.	L/20
80-0064-00	Power Pro 110W UL, CE Power Supply	32.80	30.60

Power Pro 130W UL, CUL, CE POWER SUPPLY

- +5v 15A, +12v 4A, -5v 1A
- UL, CUL and CE recognized
- 130 watts of power
- Will accept wide #8 terminal
- Dual AC input 115vac/230vac, selectable by switch
- Extruded aluminum case can be mounted vertically, horizontally or against a wall
- Hi-pot tested
- Built-in EMI filter
- On/Off LED indicator
- Overload protection
- Silver case
- 1 year warranty

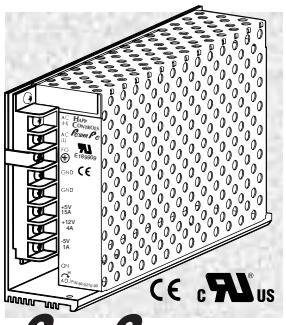

Power Pro

Overall Dimensions

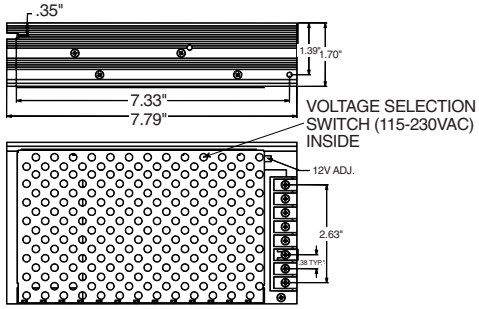

Part Number		Price per ea.	L/30
80-0210-00	Power Pro 130W UL, CUL, CE Power Supply	37.20	35.00

Power Pro 120W UL, CUL, CE POWER SUPPLY

- +12v 10A
- UL, CUL and CE recognized
- 120 watts of power
- Will accept wide #8 terminal
- Dual AC input 115vac/230vac, selectable by switch
- Extruded aluminum case can be mounted vertically, horizontally or against a wall
- Hi-pot tested
- Built-in EMI filter
- On/Off LED indicator
- Overload protection
- Silver case
- 1 year warranty

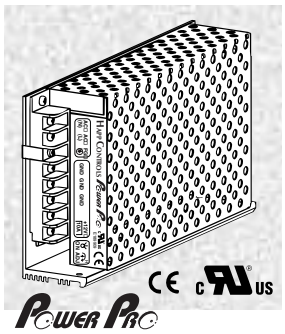

Power Pro

Overall Dimensions

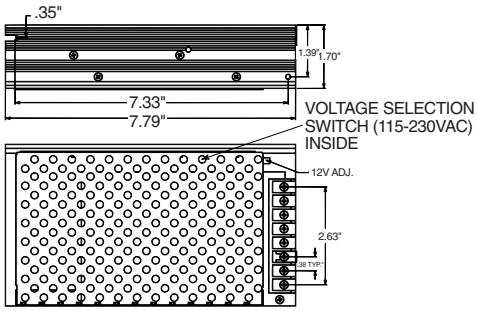

Part Number		Price per ea.	L/30
80-0215-00	Power Pro 120W UL, CUL, CE Power Supply	39.85	38.65

Power Pro 120W UL, CUL, CE POWER SUPPLY

- +24v 5A
- UL, CUL, and CE recognized
- 120 watts of power
- Will accept wide #8 terminal
- Dual AC input115vac/230vac, selectable by switch
- Extruded aluminum case can be mounted vertically, horizontally or against a wall
- Hi-pot tested
- Built-in EMI filter
- +24v DC output adjustable
- On/Off LED indicator
- Overload protection
- Silver case
- 1 year warranty

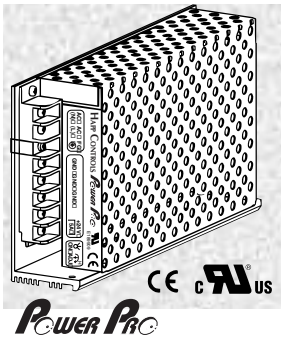

Power Pro

Overall Dimensions

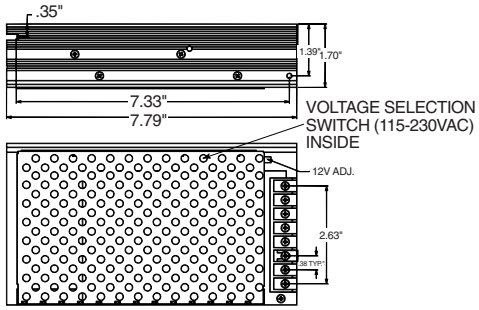

Part Number		Price per ea.	L/30
80-0216-00	Power Pro 120W UL, CUL, CE Power Supply	50.10	46.95

© HAPP CONTROLS

POWER PRO DUAL SWITCH & REMOTE CAPABLE 200 WATT POWER SUPPLY

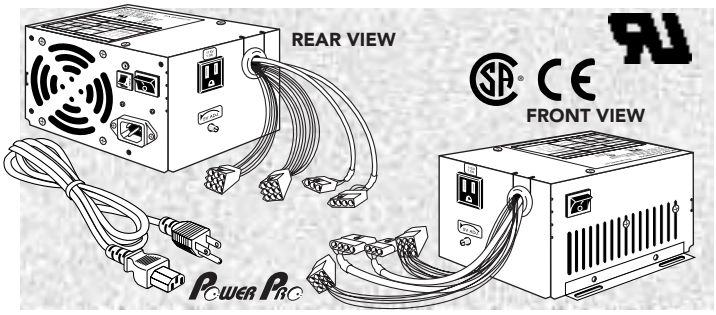

- +5v 20A, +12v 8A, -5v .5A, -12 .5A
- UL, CSA and CE Recognized
- 200 Watt power supply
- Great power supply for video games & video poker applications
- New Innovative Dual On/Off and Remote switch capable design.
- One switch on back and other on front of power supply to allow easy access to turn power On/Off
- Additional 8 Circuit Molex plug with +5vdc and +12vdc outputs for additional accessories
- Dual AC input 115vac/230vac, selectable by switch
- AC plug for hook-up of Bill Validator, 110vac 1.0A
- Metal case - AT size
- Physical Size: 3-1/2" High x 5-7/8" Wide x 5-1/2 Deep
- Supplied with 6' long SJT power cord
- 1 year warranty

Overall Dimensions

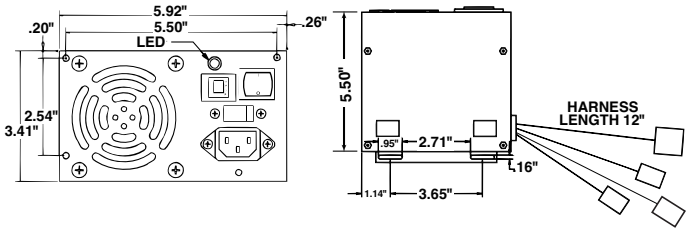

Part Number		Price per ea.	L/16
80-0002-10	200 Watt Dual Switch & Remote Capable Power Supply	43.75	38.25

POWER SUPPLY FOR GOLDEN TEE® FORE 2003 GAMES

NEW

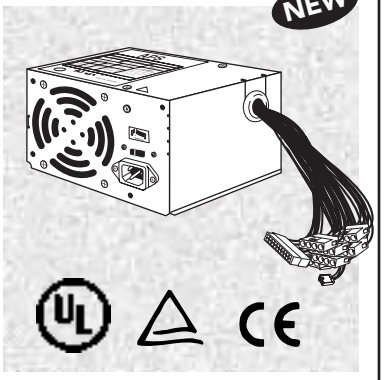

- For use in Golden Tee® Fore 2003
- Original replacement for dedicated games with a Red PCB. **Will not work for original Green PCB.**
- DC Output: 3.3V 14A, 5V 25A, -5V .5A, -12V 1A, 5Vsb 1.5A
- Switch selectable AC input 115VAC/230VAC
- Overload protected
- ATX size
- 267 watts
- Size: 5.9" L x 5.5" W x 3.3" H
- UL, TUV, CE approvals

Part Number		Price per ea.
80-1247-00	Power Supply for Golden Tee® Fore 2003	72.85

POWER PRO ULTIMATE POWER SUPPLY WITH ON/OFF SWITCH - 150 WATT

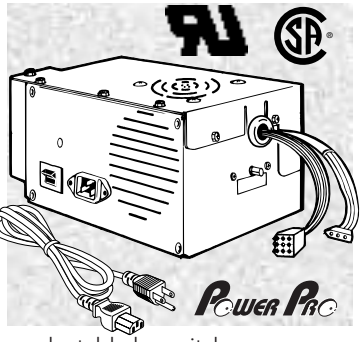

- +5v 15A, +12v 5.5A, -5v 1A
- UL recognized, CSA
- Over voltage protection on +5v, a Happ exclusive
- Designed specifically for the coin-op industry
- Smoother start-up
- Better heat dissipation: three separate heat sinks
- Low ripple and noise, EMI filter
- Dual AC input 115vac/ 230vac, selectable by switch
- Complete overload and short circuit protection
- Built in DC fan and power switch
- Metal case - XT size
- Requires minimum 1.5 amp load on +5 for proper operation
- Supplied with 6' long SJT power cord
- 1 year warranty

Overall Dimensions

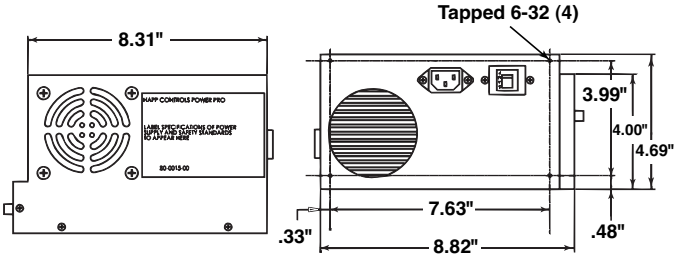

Part Number		Price per ea.	L/16
80-0015-00	Power Pro Ultimate Power Supply with On/Off Switch - 150 watt	51.60	49.85

ULTIMATE 150 WATT POWER SUPPLY WITH EXTERNAL ON/OFF CABLE

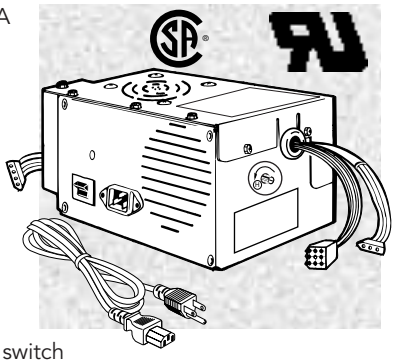

- +5v 16A, +12v 6A, -5v 05A
- UL and CSA recognized
- External On/Off cable with 4-pin Molex
- Dual AC input 115vac/230vac, selectable by switch
- Low ripple and noise, EMI filter
- Overload and short circuit protection
- Built in DC fan and power switch
- Metal case – XT size
- Dimensions 8.74"L x 5.51"W x 4.65"H
- Supplied with 8' long SJT power cord
- Meets AMOA standard
- 1 year warranty

Part Number		Price per ea.	L/20
80-0072-00	Ultimate 150 Watt Power Supply with External On/Off Cable	70.60	66.65

NOTE: On any power supply, when measuring a voltage output (+5v, +12v or -5v), set the voltage adjustment about half-way and make sure that the +5v output is connected to a minimum 1 amp load. The easiest way to do this is to measure the voltage with the power supply connected to a game board.

REPLACEMENT POWER SUPPLY FOR POT-OF-GOLD

- Exact replacement for Pot-Of-Gold & other games
- UL , CUL, CE recognized
- +5v 12A, +12v 4A, -12v 1A
- L.E.D. power on indicator
- 1 year warranty

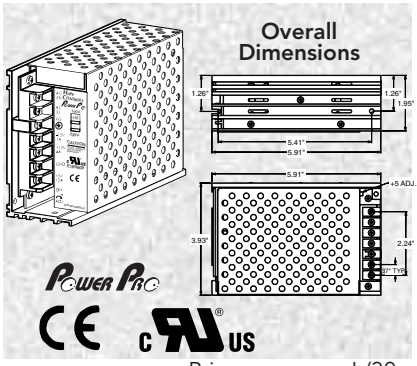

Part Number		Price per ea.	L/30
80-0003-UL	Power Supply for Pot-Of-Gold	48.25	45.80

REPLACEMENT POWER SUPPLY FOR MERIT MEGATOUCH XL

- Replacement for Merit MegaTouch XL
- AT style with fan and remote switch
- Manufacture Reference EC7528-02
- +5v 26A, +12v 9A, -5v 0.5A, -12v 0.5A
- 250 watt

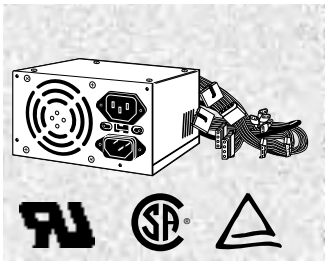

Part Number		Price per ea.
80-0312-00	Power Supply for Merit MegaTouch XL	79.99

REPLACEMENT POWER SUPPLY FOR MERIT RADEON FORCE

- Exact Replacement for Merit Radeon Force
- Manufacture Reference EC7531-03
- AT style with fan
- +5v 10A, +12v 2.5A, -12v 0.3A, +5vsb 0.8A, 3.3v 7A
- 110 watt

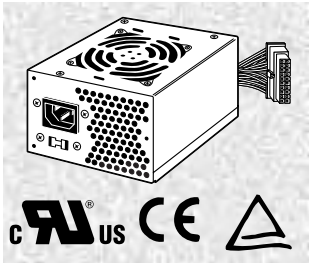

Part Number		Price per ea.
80-0312-03	Power Supply for Merit Radeon Force	81.60

REPLACEMENT POWER SUPPLY FOR MERIT MEGATOUCH BLUE MAXX

- Replacement for Merit MegaTouch Blue Maxx
- Manufacture Reference EC7531-01
- AT style with remote switch
- +5v 14A, +12v 5.5A, -12v 0.3A, +5vsb 1A, 3.3v 8A
- 145 Watt
- 1 Year Warranty

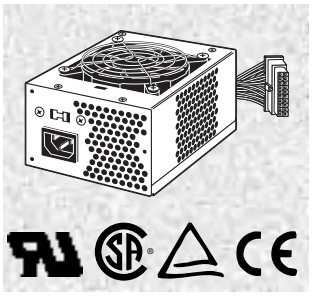

Part Number		Price per ea.
80-0314-00	Power Supply for Merit MegaTouch Blue Maxx	83.25
80-0006-35	Replacement Cooling Fan SA5 117-05	5.10

POKER REMOTE

- For use in various applications where remote switching access is required
- RF Remote control system with 1 button Transmitter
- A press of the button on transmitter activates relay for 2 seconds
- Non-programmable

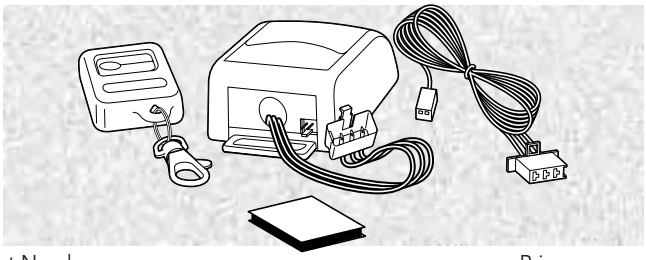

Part Number		Price per ea.
49-0712-00	Poker Remote Control, Non-Programmable	47.00
49-0712-00S	Replacement Transmitter Only	11.55

P.C. BOARD HOLDER

- Durable black nylon plastic construction
- Great for use within Universal Kit Cabinets
- Height adjustable from 4-1/2" to 12-1/2" to hold small or large PCB's
- Able to hold multi-level PCB's
- Mounts to wall of cabinet via molded mounting holes

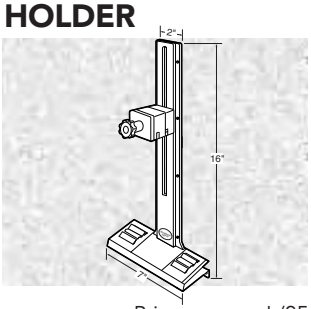

Part Number		Price per ea.	L/25
49-0007-01	P.C. Board Holder	10.95	9.70

POWER SUPPLY COOLING FAN

- For use in Computer grade power supplies
- 12vdc
- Size: 3-1/8"square x 1"

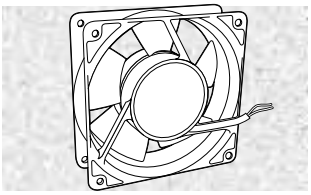

Part Number		Price per ea.	L/10
80-0006-33	Cooling Fan With Sleeve Bearings	3.30	3.00
80-0006-34	Cooling Fan With Ball Bearings	7.45	6.75

DO YOU WANT TO KNOW EACH TIME YOUR ORDER SHIPS OUT?

e-mail notification and order **tracking information** is now available from Happ Controls! Contact your sales representative or e-mail our customer service department at: **info@happcontrols.com** with your account information.

© HAPP CONTROLS

REPLACEMENT POWER SUPPLY BOARD FOR BALLY SLOTS

- For Bally Pro Series slots V7000 & V7200 & 5000
- Just replace the board and save $$
- 63.5 watts, 5.5 amps
- UL, CE, CSA Approved

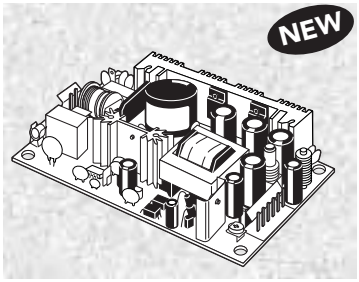

Part Number		Price per ea.	L/6
80-1178-00	Power Supply Board	249.90	39.75

GENERAL PURPOSE DC POWER SUPPLY

- 30-volt variable power supply
- It features dual panel meters, volts, and amps, coarse and fine voltage adjustment, hi-lo current with min/max control, and a dual amp scale meter
- 117V AC 60 Hz input and a 0-30V DC output with 0-5 amp regulation
- It has overload and short circuit protection, low ripple of 0.5mV RMS, current limiting 0-5 amps, single output heavy duty binding posts for (+) (-) ground, and a heavy duty 3 prong power cord

Technical Specifications

Frequency Range N/A Input 117V AC / 60 Hz Output 0.30V DC - 0-5 Amp Regulated Weight 10 lbs Size 6-1/4"(H) X 8-1/2"(W) X 10"(D)

Part Number		Price per ea.
32-0463-00	General Purpose DC Power Supply	249.90

STEP-UP TRANSFORMER

- Auto-Transformer, Step-Up
- Allows operation of U. S. video games and other equipment in other countries
- Converts 110 VAC to 220 VAC
- 50Hz – 60Hz
- Maximum 300 Watts
- Case Dimensions: 3.875" H X 3.125" W X 3.875"

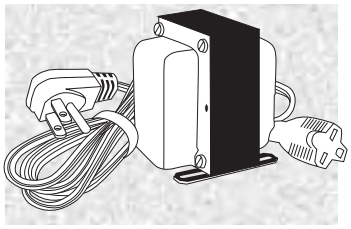

Part Number		Price per ea.
80-0044-00	Step-Up Transformer	68.85

ISOLATION TRANSFORMER

- Input 120 volts
- Output 120 volts
- Output power 120 watts
- UL listed

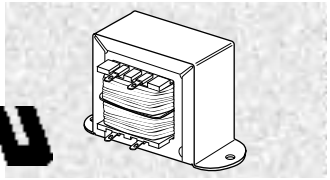

Part Number		Price per ea.	L/25
80-2000-00	Isolation Transformer	16.90	15.70

REPLACEMENT POWER SUPPLY BOARD FOR JCM BILL VALIDATORS

- For JCM DBV 145, 146, 147, 200
- No need to buy the complete power supply!
- Just replace the board and save big $$
- Original equipment board
- It's easy and economical
- Used inside the 550-100035 power supply
- Replaces 550-100036, 038552 and 040924
- 15 Watts

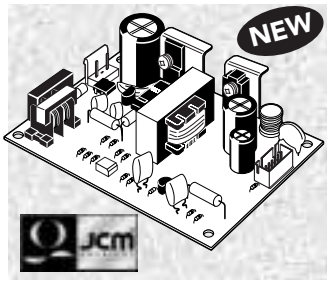

Part Number		Price per ea.
300-100073	Power Supply Board for JCM	72.75

WATCHDOG REMOTE COMPUTER POWER CONTROLLER

- Provides a complete automatic control over a kiosk or any unattended personal computer, file server, gateway and/or modem
- Fully programmable timer and AC power switch with a built-in RS-232 interface and a telephone ring detector
- UL, CSA, FCC and EC approvals
- Powers down and restarts an attached PC and/or modem
- Software available for MS-DOS, Windows 3.1x and 95/NT
- Utilizes a MicroChip PIC12C508 RISC micro-controller, operating at approx. 1 million instructions per second. Performs the timing functions, controls a power relay, monitors a telephone line for ring signals and manages 2400 baud communications.
- Power Relay rated at 8 amps at 120/240 volts AC. Load may be either resistive or inductive. No minimum load
- Switches power at a near-zero-voltage-crossing to minimize stress on the attached PC.
- Case size: 2" x 2.6" x 3.9"
- IEC connectors

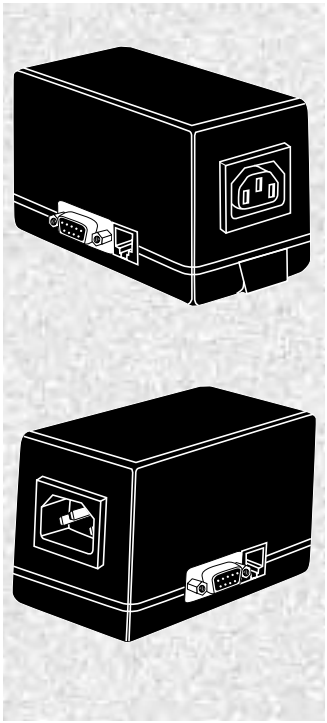

- Communications: DB-9 female jack
- Telephone: RJ-11 jack
- Switching capacity: 120/124 volts 50/60 cycle (8 amperes)

Part Number		Price per ea.
80-1118-00	Watchdog Remote Computer Power Controller	180.75

POWERLINE FILTERS

- Eliminates power spikes
- .250" quick connect terminals
- 115/250V
- UL recognized

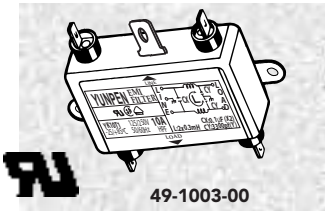

Part Number		Price per ea.	L/25
49-1003-00	Powerline Filter, 10 AMP	8.85	7.95
49-5084-00	Powerline Filter, 5 AMP	7.60	6.75

EDGE CONNECTORS

- Dual row connector
- Available in 20, or 56 pin configurations

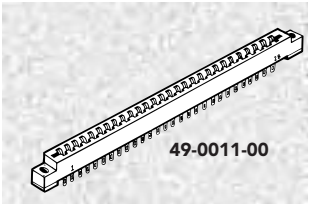

Part Number		Price per ea.	L/25
49-0011-00	56 Pin "Jamma" Connector (w/Solder Terminals)	3.40	3.15
49-0011-56	56 Pin "Jamma" Connector for Push-in Terminals (w/o Terminals)	3.15	2.95
49-0276-00	Push-in Terminals for 49-001-56 Connector	.19	.17
49-0013-00	20 Pin Connector w/Solder Terminals	3.40	3.15

JAMMA CABLE ASSEMBLIES

- Labeled for ease of identification
- Universal design for 2 player games
- 5' length – fits any cabinet

JAMMA CABLE

- Jamma edge connection with wires for power, speakers, coin switches, start switch and controls

SUPER JAMMA CABLE

- Same as Jamma Cable but complete with 2' long Molex connected control panel harness with .187" connectors

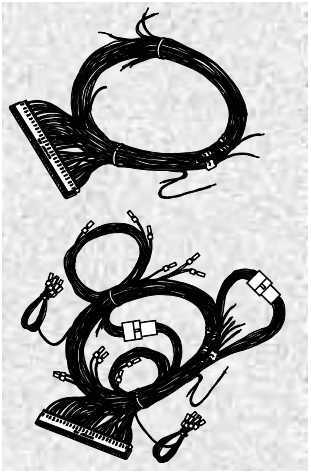

Part Number		Price per ea.	L/25
80-5100-00	"Jamma" Cable	19.35	18.15
80-5000-00	Super "Jamma" Cable	38.65	36.25

8-LINE HARNESS

- Standard six button 8-line upright cabinet harness
- Additional "Dummy" terminals installed in edge connector for additional hook up's
- Button wires are broken-out for easy use

Part Number		Price per ea.
95-0634-00	8-Line Harness	28.40

POWER SUPPLY CORDS

- 10 foot cord (unless noted)
- E58406
- 18 AWG/3 wires
- Round type – SJT
- 105°C temperature

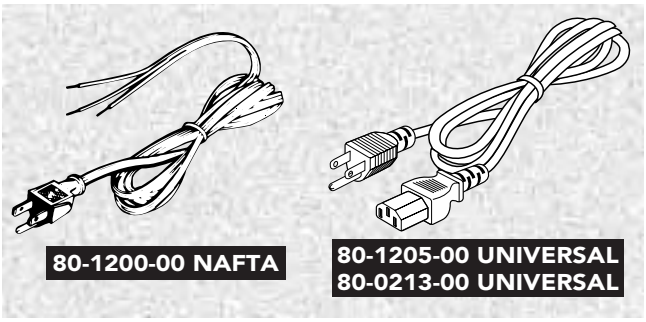

Part Number		Price per ea.	L/25
80-1200-00	NAFTA Power Supply Cord – Round	3.40	3.15
80-1205-00	Universal Power Cord F/Power Supplies, 6 Feet	4.90	4.55
80-0213-00	Universal Power Cord, 8 ft., 16 Gauge	10.90	10.25

INTERLOCK SWITCH

- E68-00A SPDT, 0.1 amp
- E68-01A SPST, 0.1 amp
- E69-00A SPDT, 10 amp
- E69-30A SPDT, 10 amp
- E79-00A DPDT, 10 amp
- E79-30A DPDT, 10 amp
- E79-40A DPDT, 10 amp
- UL/CSA Listed

Part Number		Price per ea.	L/25
53-7031-00	Interlock Switch, E68-00A	3.60	3.30
53-7025-00	Interlock Switch, E68-01A	3.60	3.30
53-7010-00	Interlock Switch, E69-00A	7.10	6.75
53-7020-00	Interlock Switch, E69-30A	3.60	3.30
53-7011-00	Interlock Switch, E79-00A	5.15	4.80
53-7030-00	Interlock Switch, E79-30A	5.15	4.80
53-7028-00	Interlock Switch, E79-40A	5.25	4.90
42-0578-00	Bracket for E68 & E69 Interlock Switches	1.60	1.50

ON/OFF SWITCH

- 6A/125 VAC
- Double pole single throw
- UL/CSA listed

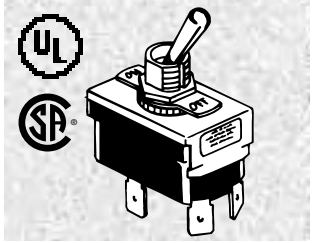

Part Number		Price per ea.	L/25
49-0005-00	On/Off Switch	4.85	4.30

Visit Our Web Site:
happcontrols.com
for **NEW** Product Updates!!

© HAPP CONTROLS

TRIPP LITE INTERNET OFFICE 500 UPS SYSTEM

NEW

- 6 Outlets (3 UPS/surge, 3 surge-only)
- Built-in RJ11 jacks provide complete 2-line modem/fax surge protection
- Serial port and free software facilitate unattended shutdown
- $25,000 Ultimate Lifetime Insurance (USA & Canada only)
- 500VA / 280 watts
- 30 minutes typical backup time
- DB9 serial port for network interface
- 6 ft. telephone cord included
- Diagnostic LEDs
- 2 year product warranty
- 16 lbs.

Part Number		Price per ea.
80-0406-00	TRIPP LITE Internet Office 500 UPS System	112.00

TRIPP LITE INTERNET OFFICE 700 UPS SYSTEM

NEW

- 6 Outlets (3 UPS/surge, 3 surge-only)
- Single line phone/DSL surge protection
- USB port and free software facilitate unattended shutdown
- $25,000 Ultimate Lifetime Insurance (USA & Canada only)
- Supports a max load 700VA / 425 watts for 5 minutes
- Supports a half load of 350VA / 215 watts for 17 minutes
- USB cabling included
- Attractive gray tower configuration
- Built-in audible alarm and 3 front panel LEDs
- 2 year product warranty
- 21 lbs.

Part Number		Price per ea.
80-0407-00	TRIPP LITE Internet Office 700 UPS System	139.00

TRIPP LITE INTERNET OFFICE 525 UPS SYSTEM

NEW

- 6 Outlets (3 UPS/surge, 3 surge-only)
- Built-in RJ11 jacks provide complete modem/phone protection
- DB9 communications port and free software facilitate unattended shutdown
- $25,000 connected equipment insurance (USA & Canada only)
- 525VA / 300 watts supports entry-level PC systems for several minutes
- Attractive stealth black UPS color scheme
- Includes 6 ft. AC power cord, on/off power switch
- Compact cabinet design fits easily on or under any desk
- Built-in audible alarm and front panel LEDs
- 2 year product warranty
- 8 lbs.

Part Number		Price per ea.
80-0408-00	TRIPP LITE Internet Office 525 UPS System	59.99

TRIPP LITE INTERNET OFFICE 525U UPS SYSTEM

NEW

- 6 Outlets (3 UPS/surge, 3 surge-only)
- Built-in RJ11 jacks provide complete modem/phone protection
- USB port and free software facilitate unattended shutdown
- $25,000 connected equipment insurance (USA & Canada only)
- 525VA / 300 watts supports entry-level PC systems for several minutes
- Attractive stealth black UPS color scheme
- Includes 6 ft. AC power cord, on/off power switch
- Compact cabinet design fits easily on or under any desk
- Built-in audible alarm and front panel LEDs
- 2 year product warranty
- 8 lbs.

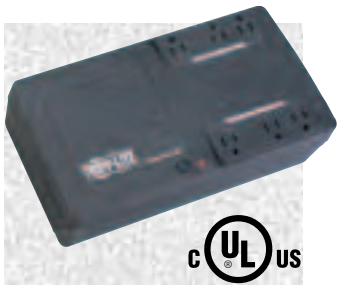

Part Number		Price per ea.
80-0409-00	TRIPP LITE Internet Office 525U UPS System	81.00

DO YOU WANT TO KNOW EACH TIME YOUR ORDER SHIPS OUT?

e-mail notification and order **tracking information** is now available from Happ Controls! Contact your sales representative or e-mail our customer service department at: **info@happcontrols.com** with your account information.

POWER SUPPLY QUICK REFERENCE

GAME	MFG.	PART NUMBER	DESCRIPTION
AREA 51	ATARI	80-0004-00 80-1152-00	POWER SUPPLY +5V@20A, +12V@8A, -5V@.5A, -12V@.51 MP4200C POWER SUPPLY UL+5V 20A/+12V/8A -5V/0.5A/-12V/0.5A DUAL ON/OFF
ARTIC THUNDER	MIDWAY	20-10167	POWR S. SWTCHR 150w UL/LSA/UDE
BLITZ	MIDWAY	80-20167-0	PWR SUPP 5V16A, 12v6A, -5v.5A -12v.5A
BROMELY	BROMELY	80-0021-00	POWER SUPPLY UL +5V16A,+12V6A -5V0.5A W/ EXTERNAL ON/OFF
BEAT THE CHAMP	KONAMI	80-0072-00	POWER SUPPLY ULT W/REMOTE, ON/OFF CABLE NO ON-OFF CASE
CALIFORNIA SPEED	ATARI	80-20167-0	POWER SUPPLY 5V@16A, 12V@6A, -5V@.5A, -12V@.5A
CADILLAC JACK	CADILLAC JACK	80-1152-00	POWER SUPPLY UL+5V 20A/+12V/8A -5V/0.5A/-12V/0.5A DUAL ON/OFF
CARNEVIL	MIDWAY	80-20167-0	POWER SUPPLY 5V@16A, 12V@6A, -5V@.5A, -12V@.5A
CART FURY	MIDWAY	80-1060-01	POWER SUPPLY UP-700-250 PETER CHOU
CHAMPIONSHIP RALLY	SEGA	80-0027-UL	POWER SUPPLY MINI 15A 120 WATT, 5V@15A, 12V@3A, -5V@IA UL
CRUISIN EXOTICA	MIDWAY	80-1060-01	POWER SUPPLY UP-700-250 PETER CHOU
CRUISIN USA	WILLIAMS	80-0074-100	POWER SUPPLY 5V@20A, 12V@8A, -5V@.5A, -12V@.5A' FAN HDD, NO CORD 12 PIN MAIN OUT
CRUISIN WORLD	WILLIAMS	80-20167-0	POWER SUPPLY 5V@16A, 12V@6A, -5V@.5A, -12V@.5A
CYCLONE	I.C.E.	80-6000-UL	POWER SUPPLY 5V@15A, 12V@4A, -5V@1A 104 WATT UL, CE, TUV
DAYTONA USA	SEGA	80-0074-100	POWER SUPPLY 5V@20A, 12V@8A, -5V@.5A, -12V@.5A' FAN HDD NO CORD 12 PIN MAIN OUT
EVIL KNIGHT	KONAMI	80-0072-00	POWER SUPPLY ULT W/REMOTE ON/OFF CABLE NO ON-OFF ON CASE
GAUNTLET	ATARI	80-0074-100	POWER SUPPLY 5V@20A, 12V@8A, -5V@.5A, -12V@.5A' FAN HDD NO CORD 12 PIN MAIN OUT
GRID	MIDWAY	80-1060-01	POWER SUPPLY UP-700-250 PETER CHOU
GTI	KONAMI (AMERICA)	80-0072-00	POWER SUPPLY ULT W/REMOTE ON/OFF CABLE NO ON-OFF ON CASE
GTI CLUB	KONAMI	80-0072-00	POWER SUPPLY ULT W/REMOTE ON/OFF CABLE NO ON-OFF ON CASE
HOUSE OF THE DEAD	SEGA	80-1152-00	POWER SUPPLY UL+5V 20A/+12V/8A -5V/0.5A/-12V/0.5A DUAL ON/OFF
HYDRO THUNDER	MIDWAY	20-10552	POWER SUPPLY - HYDROTHUNDER
HYPER DRIVE	MIDWAY	80-20167-0	PWR SUPP 5V16A, 12v6A, -5v.5A -12v.5A
I.T. COUNTER '97	INCREDIBLE TECH.	80-0209-00	POWER SUPPLY 200 WATT/FULL SIZE XT PACKAGE PETER CHOU
I.T. GOLF GAMES	INCREDIBLE TECH.	80-0002-10	PWR SUPP UL 5V20A,12V8A,-5V.5A -12V.5A CORD,W/ DUAL ON/OFF SW
KILLER INSTINCT	MIDWAY	80-20167-0	PWR SUPP 5V16A, 12v6A, -5v.5A -12v.5A
KONAMI	KONAMI	80-0072-00	POWER SUPPLY ULT W/REMOTE ON- OFF CABLE NO ON-OFF ON CASE
KONAMI	KONAMI	80-0209-00	POWER SUPPLY 200 WATT/FULL SIZE XT PACKAGE PETER CHOU
LETHAL ENFORCER	KONAMI	80-0072-00	POWER SUPPLY ULT W/REMOTE ON- OFF CABLE NO ON-OFF ON CASE
MAXIMUM FORCE	ATARI	80-0074-00	POWER SUPPLY 5V@20A, 12V@8A, -5V@.5A, -12V@.5A, 12 PIN AMP
MERIT	MERIT	80-0013-00	POWER SUPPY 12 AMP PETER CHOU +5V12A,+12V3A,-5V1A NON-UL
MERIT MEGATOUCH	MERIT	80-0312-00	POWER SUPPLY FOR MERIT MEGATOUCH XL SERIES
MORTAL COMBAT (ALL SERIES)	MIDWAY	80-6000-UL	POWER SUPPLY 5V@15A, 12V@4A, -5V@1A 104 WATT, UL CE TUV
NAMCO	NAMCO	80-0209-00	POWER SUPPLY 200 WATT/FULL SIZE XT PACKAGE PETER CHOU
NAMCO GUN GAMES	NAMCO	80-0216-00	POWER SUPPLY +24VDC 5 AMP TERM STRIP MP20120E UL, CUL, CE
NBA ON NBC	MIDWAY	80-0074-00	POWER SUPL 5V20A,12V8A,-5V.5A -12V.5A, 12 PIN AMP REM
NBA PLAY BY PLAY	KONAMI	80-0072-00	POWER SUPPLY ULT W/REMOTE ON/OFF CABLE NO ON-OFF ON CASE
NBA SHOWTIME	MIDWAY	80-20167-0	PWR SUPP 5V16A, 12v6A, -5v.5A -12v.5A
NEO GEO	SNK	80-0072-00	POWER SUPPLY ULT W/REMOTE ON- OFF CABLE NO ON-OFF ON CASE
NFL BLITZ	WILLIAMS	80-0074-100	POWER SUPPLY 5V@20A, 12V@8A, -5V@.5A, -12V@.5A' FAN HDD NO CORD 12 PIN MAIN OUT
NINTENDO MISC.	NINTENDO	80-6000-UL	POWER SUPPLY 5V@15A, 12V@4A, -5V@1A 104 WATT UL, CE, TUV
OFF ROAD	MIDWAY	80-20167-0	POWER SUPPLY 5V@16A, 12V@6A, -5V@.5A, -12V@.5A
OPEN ICE	MIDWAY	80-20167-0	PWR SUPP 5V16A, 12v6A, -5v.5A -12v.5A
PHOTO BOOTH	PHOTO VEND	80-0015-00	XT POWER SUPPLY 150 WATT, WITH SWITCH ON CASE, W/POWER CORD
POT OF GOLD	LEISURE TECH	80-0003-00	POWER SUPPLY 5V@12A, 12V@4A, -12V@1A MP21120A - NLA AFTER STOCK DEPLETED- USE 80-0003-UL SAME SPECS AS ABOVE-UL APPR.
RADICAL BIKER	ATARI	80-20167-0	PWR SUPP 5V16A, 12v6A, -5v.5A -12v.5A
SAN FRANCISCO RUSH	ATARI	80-0074-00	POWER SUPPLY 5V@20A, 12V@8A, -5V@.5A, -12V@.5A, 12 PIN AMP
		80-0074-100	POWER SUPPLY 5V@20A, 12V@8A, -5V@.5A, -12V@.5A' FAN HDD NO CORD 12 PIN MAIN OUT
SILENT SCOPE	KONAMI	80-0074-100 80-1152-00	POWER SUPPLY 5V@20A, 12V@8A, -5V@.5A, -12V@.5A' FAN HDD NO CORD 12 PIN MAIN OUT POWER SUPPLY UL+5V 20A/+12V/8A -5V/0.5A/-12V/0.5A DUAL ON/OFF
SITE 4	ATARI	80-0074-00	POWER SUPPLY 5V@20A, 12V@8A, -5V@.5A, -12V@.5A, 12 PIN AMP
SKEEBALL	SKEEBALL	80-0021-00	POWER SUPPLY UL +5V16A,+12V6A -5V0.5A W/ EXTERNAL ON/OFF
THRILL DRIVE	KONAMI	80-0072-00	POWER SUPPLY ULT W/REMOTE ON/OFF CABLE NO ON-OFF ON CASE
TIME CRISIS	NAMCO	80-0216-00	POWER SUPPLY +24VDC 5 AMP TERM STRIP MP20120E UL, CUL, CE
TIME CRISIS 2	NAMCO	80-0216-00	POWER SUPPLY +24VDC 5 AMP TERM STRIP MP20120E UL, CUL, CE
TOUCHMASTER	MIDWAY UPRIGHT	80-20167-0	PWR SUPP 5V16A, 12v6A, -5v.5A -12v.5A
TOUCHMASTER	MIDWAY COUNTERTOP	80-20167-0	PWR SUPP 5V16A, 12v6A, -5v.5A -12v.5A
VAPOR TRX	MIDWAY	80-0074-100	POWER SUPPLY 5V@20A, 12V@8A, -5V@.5A, -12V@.5A' FAN HDD NO CORD 12 PIN MAIN OUT"
VIDEO POKER	VARIOUS GAMES	80-0002-10	POWER SUPPLY UL 5V@20A, 12V@8A -5V@.5A, -12V@.5A CORD, W/DUAL ON/OFF SWITCH
WAR FINAL ASSAULT	ATARI	80-20167-0	PWR SUPP 5V16A, 12v6A, -5v.5A -12v.5A
WAR GODS	MIDWAY	80-20167-0	PWR SUPP 5V16A, 12v6A, -5v.5A -12v.5A

© HAPP CONTROLS

HAPP CONTROLS ILLUMINATED PUSHBUTTON FEATURES

Standard Buttons

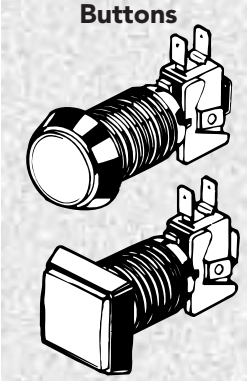

See pages 190-192

Dual & Inclined Buttons

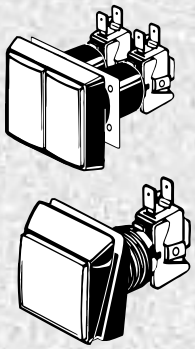

See page 193

Low Profile Buttons

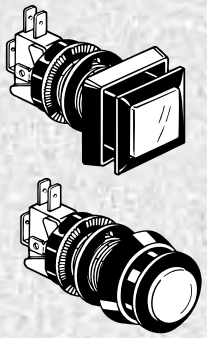

See page 194

Poker VLT Buttons

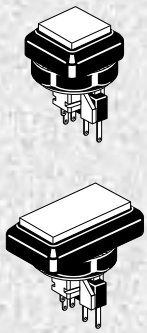

See pages 195-196

Budget Button Sets

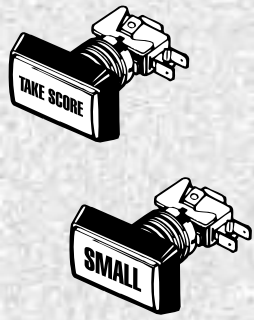

See page 197

All Happ Illuminated Pushbuttons:

- Made with highest quality materials
- Exclusive "Posi-Snap" or "Posi-Lock" design assures secure fit
- Fits wood or metal control panels
- Polycarbonate lens cap for optical clarity
- Heat resistant plastic
- Microswitch reliability tested to 10,000,000 cycles
- Custom legend lettering designs and artwork available at nominal charge

Available Options:

- Long life #658 14 V DC, lamp optional 15,000 hours
- #555 6 V DC, 28 V DC lamps and LED optional
- Chrome or brass plating available on bezel at nominal charge
- Can be used as lighted indicators with optional indicator washer (plunger will not depress)
- Custom printing on legends available at nominal charge
- For illuminated pushbutton accessories, see 196, 201-202
  - Button Plugs
  - Illuminated pushbutton covers
  - Illuminated pushbutton wrench
  - LED for illuminated pushbuttons

"Posi-Snap" Design for All Happ Standard, Dual and Inclined, Low Profile, and Poker VLT Buttons

EXCLUSIVE!

Lamp Assembly Installation
Happ Controls has developed the exclusive "Posi-Snap" design to assure a positive fit between the button bezel and the lampholder assembly. Simply insert lampholder assembly into button bezel (step 1), then rock the lampholder assembly to one side while pushing forward into the button body (step 2), then rock the lampholder assembly in the opposite direction until it *'clicks'* in place (step 3).

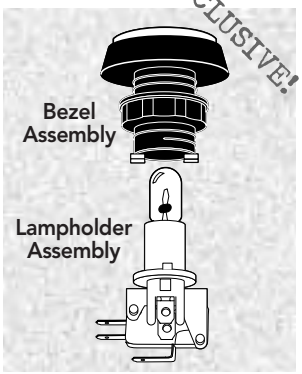

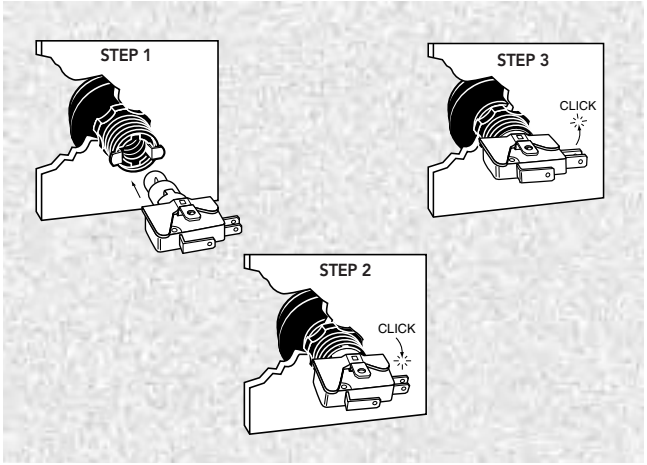

"Posi-Lok" Design for All Happ Budget Button Sets

EXCLUSIVE!

Lamp Assembly Installation
Happ Controls has developed the exclusive "Posi-Lok" design to assure a positive fit between the button bezel and the lampholder assembly. Simply insert lampholder assembly into button bezel (step 1), make sure that the notch on the lampholder assembly is aligned with the tab on the bezel assembly (step 2), then twist or turn the lampholder assembly until it locks in place (step 3).

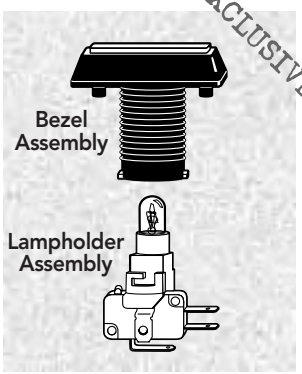

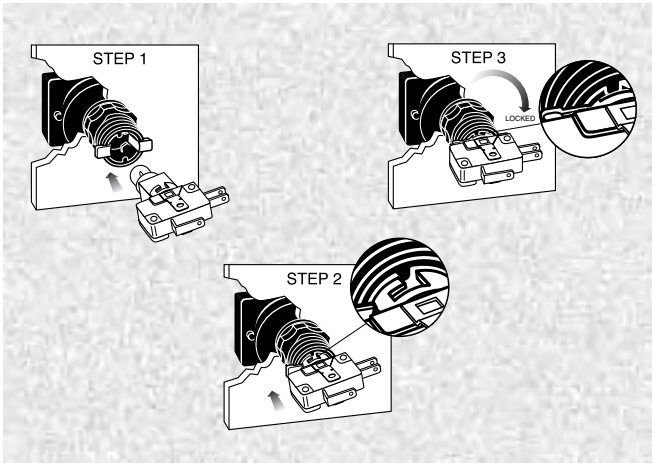

ILLUMINATED PUSHBUTTONS

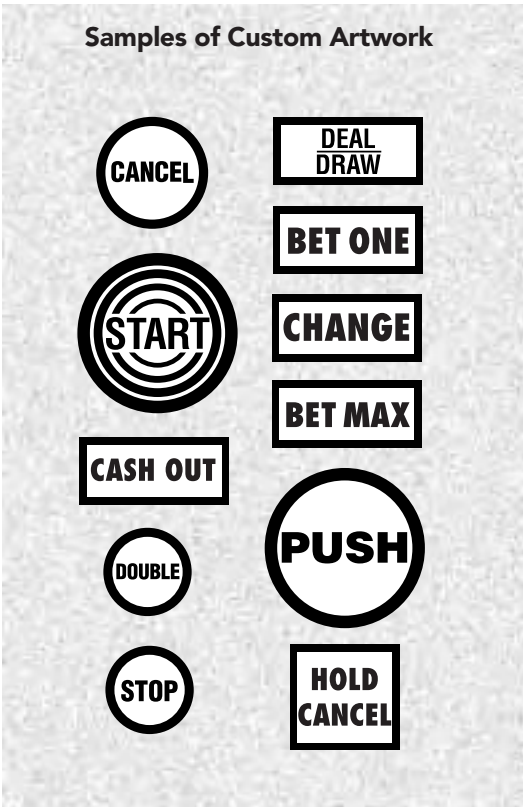

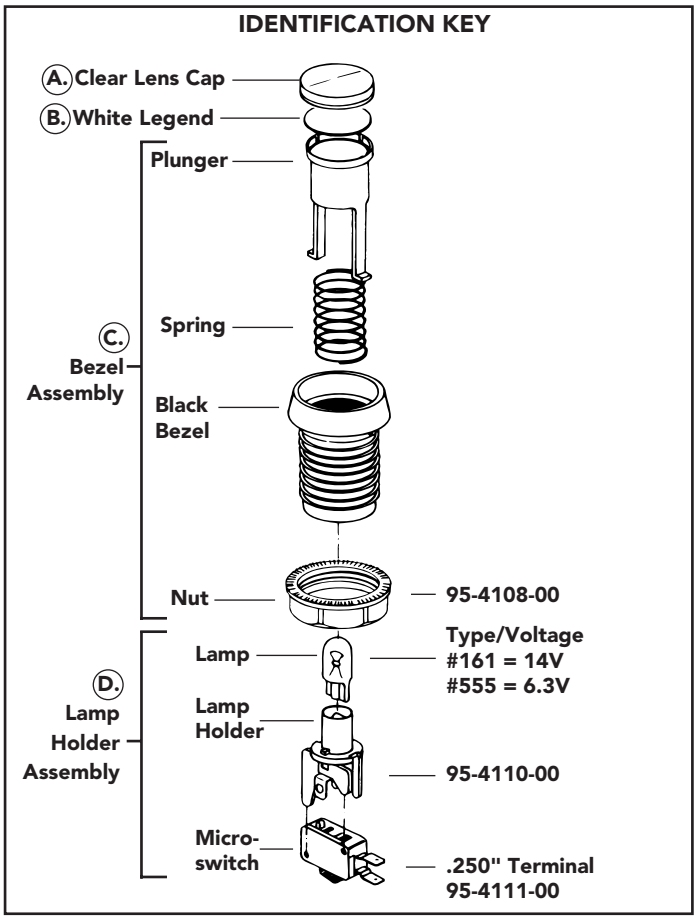

Button Style	A Clear Lens Cap	Price	B White Legend	Price	C Bezel Assy	Price	D Lampholder Assy w/14v Lamp	Price	D Lampholder Assy w/6V Lamp	Price
Small Round	95-4021-38	1.05	95-4022-31	.38	95-0020-00	2.40	54-0004-01	2.85	54-0006-01	3.15
Small Square	95-4041-38	1.05	95-4042-31	.38	95-0040-00	2.40	54-0004-01	2.85	54-0006-01	3.15
Rectangle	95-4051-38	1.05	95-4052-31	.38	95-0050-00	2.40	54-0004-01	2.85	54-0006-01	3.15
Elliptical	59-6010-18	1.05	59-6020-11	.38	59-6100-00	2.40	54-0004-01	2.85	54-0006-01	3.15
Medium Round	95-4061-68	1.05	95-4062-61	.38	95-0060-00	2.40	54-0004-01	2.85	54-0006-01	3.15
Large Round	95-4011-38	1.05	95-4012-31	.38	95-0010-00	2.40	54-0004-01	2.85	54-0006-01	3.15
Large Square	95-4031-38	1.05	95-4032-31	.38	95-0030-00	2.40	54-0004-01	2.85	54-0006-01	3.15

ILLUMINATED PUSHBUTTONS

Small Round

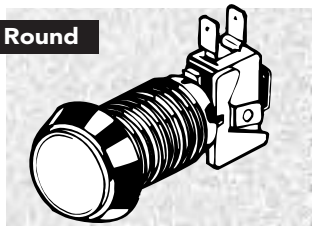

Small Square

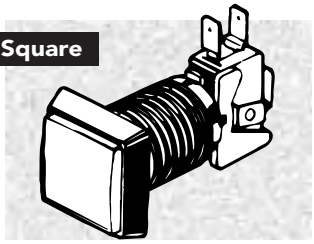

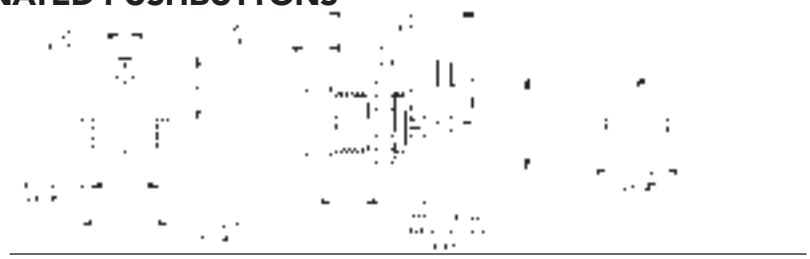

LEGEND & LENS CAP: X = Color

0 = Red	3 = Green
1 = White*	5 = Yellow
2 = Blue	7 = Amber(Orange)

*When ordering a white legend you will receive a clear cap

Part Number		Price per ea.	L/100
54-0004-2X	Small Round, 14V #161 lamp, .250 micro.	6.10	5.55
54-0004-4X	Small Square, 14V #161 lamp, .250 micro.	6.10	5.55

© HAPP CONTROLS

ILLUMINATED PUSHBUTTONS

Rectangle

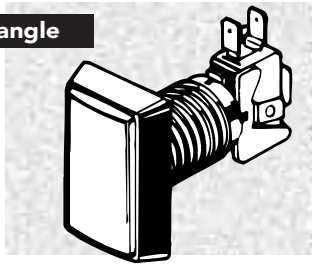

PANEL MOUNTING

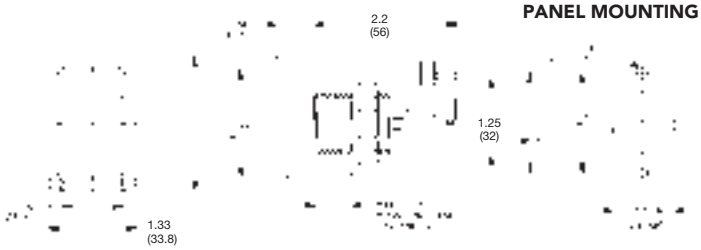

Elliptical

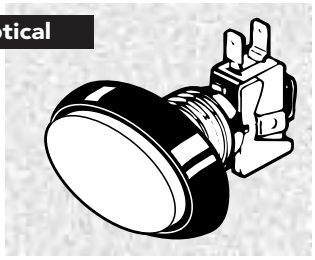

PANEL MOUNTING

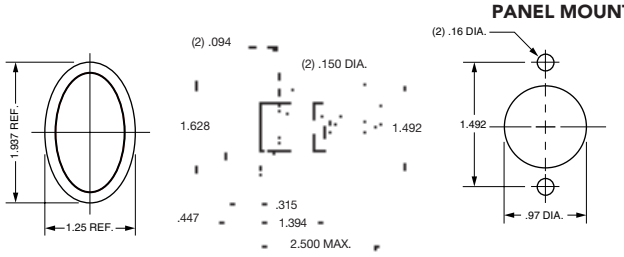

Medium Round

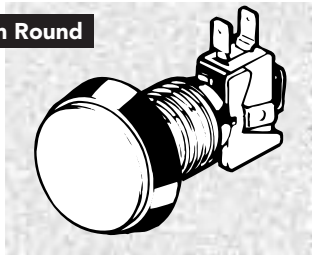

PANEL MOUNTING

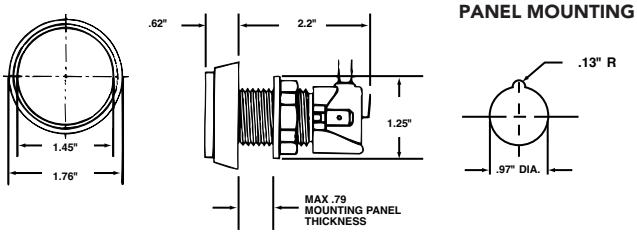

Large Round

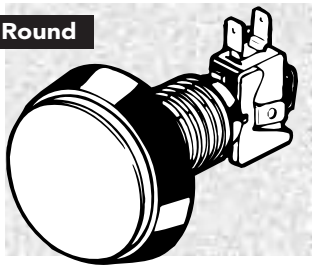

PANEL MOUNTING

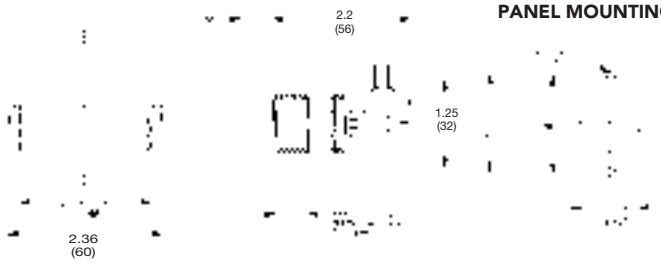

Large Square

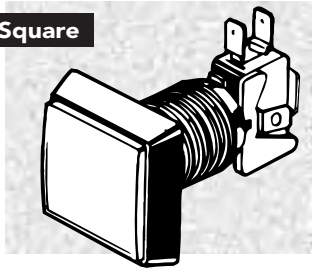

PANEL MOUNTING

Jumbo Round

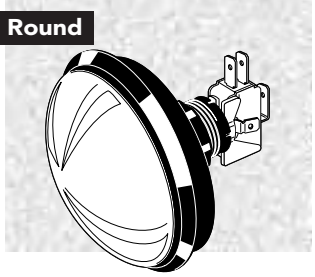

PANEL MOUNTING

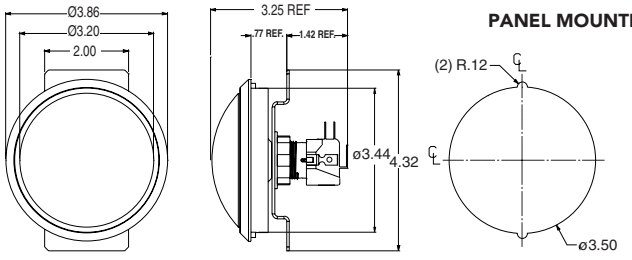

* Jumbo Round Pushbuttons come standard with white legend and cap color denotes overall button color.

LEGEND & LENS CAP*: X = Color

0 = Red	3 = Green
1 = White	5 = Yellow
2 = Blue	7 = Amber(Orange)

Part Number		Price per ea.	L/100
54-0004-5X	Rectangular, 14V #161 lamp, .250 micro.	6.10	5.55
59-6004-8X	Elliptical, 14V #161 lamp, .250 micro.	6.75	6.10
54-0004-6X	Medium Round, 14V #161 lamp, .250 micro.	6.75	6.10
54-0004-1X	Large Round, 14V #161 lamp, .250 micro.	6.75	6.10
54-0004-3X	Large Square, 14V #161 lamp, .250 micro.	6.75	6.10
95-4002-1XZL	Jumbo Round, 14V #161 Lamp, .250 micro. with locking lampholders (Legends are white only)	26.45	20.40

ILLUMINATED PUSHBUTTONS WITH SUBMINIATURE SWITCH

NEW

- Standard illuminated pushbutton fitted with a subminiature switch with gold contacts and .110 terminals
- Subminiature switch allows more room under control panel
- Designed to resist spills and sticking
- High reliability and long life, tested to 10,000,000 cycles
- Fitted standard with #73, 14V wedge based lamp
- Fits wood or metal control panels
- Custom printing on legends available at nominal charge
- See page 202 for LED

Small Round

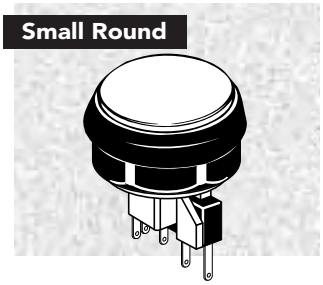

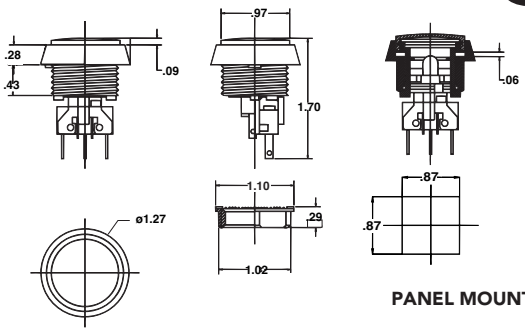

PANEL MOUNTING

Medium Round

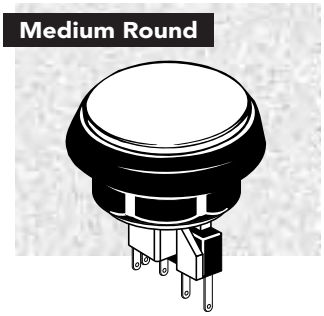

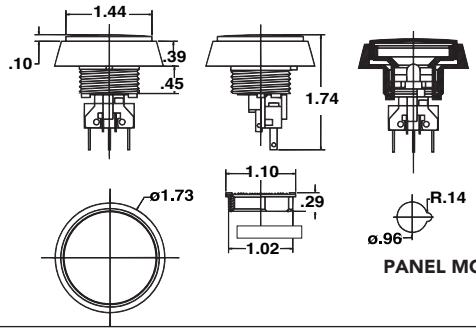

PANEL MOUNTING

Small Square

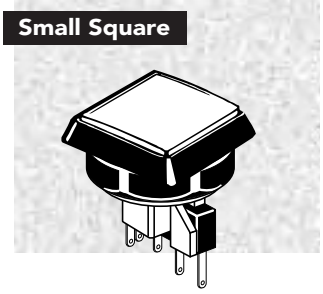

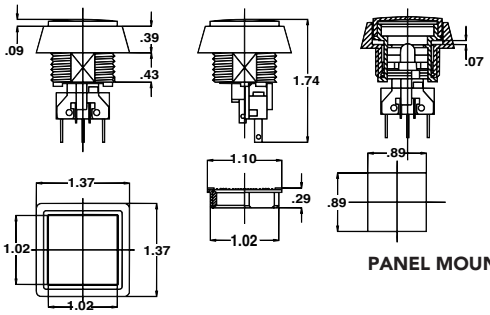

PANEL MOUNTING

Large Square

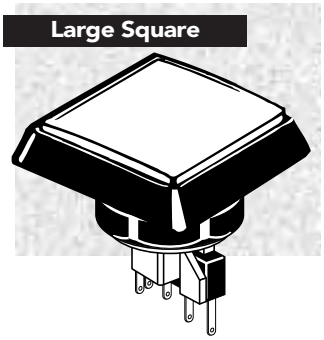

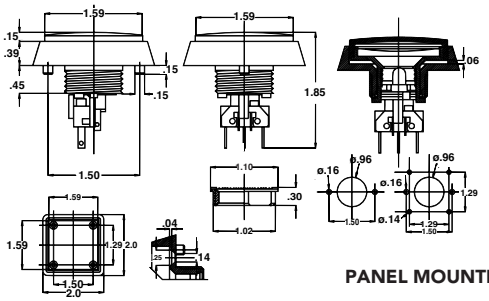

PANEL MOUNTING

Rectangle

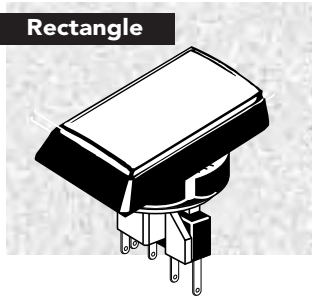

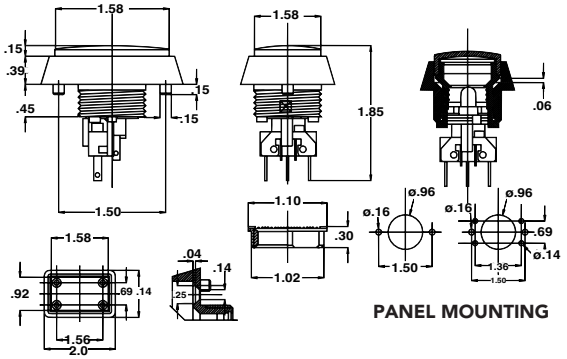

PANEL MOUNTING

LEGEND & LENS CAP: X = Color

0 = Red	5 = Yellow
1 = White	7 = Amber (Orange)
2 = Blue	
3 = Green	

Part Number		Price per ea.	L/100
54V-0004-2X	Small Round Pushbutton	7.25	6.75
54V-0004-6X	Medium Round Pushbutton	7.25	6.75
54V-0004-4X	Small Square Pushbutton	7.25	6.75
54V-0004-3X	Large Square Pushbutton	7.25	6.75
54V-0004-5X	Rectangle Pushbutton	7.25	6.75

© HAPP CONTROLS

DUAL & INCLINED ILLUMINATED PUSHBUTTONS

Available Options:

- Unique design to enhance control panel look
- Provides dual function capability in limited space
- Mounting hardware included for Dual Pushbuttons (M-3 Flat Head 1" Screws)
- Fits wood or metal control panels
- Microswitch reliability tested to 10,000,000 cycles
- Fitted as standard with T-3 1/4 incandescent #161 14v DC bulb
- Custom printing on legends available at nominal charge
- See page 202 for LED

Large Square Standard

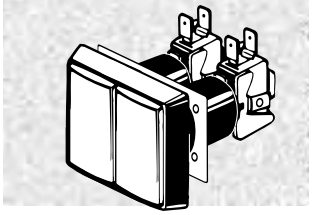

PANEL MOUNTING

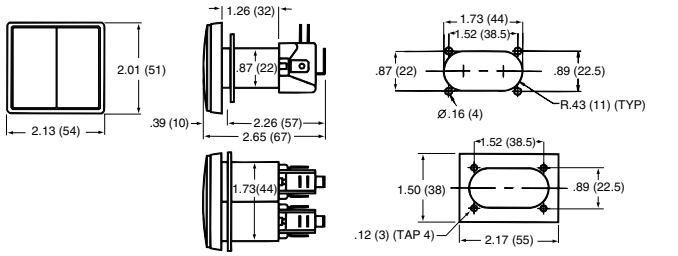

Rectangle Standard

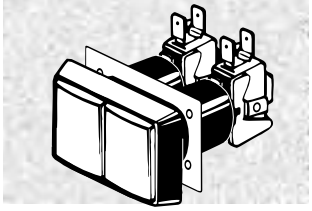

PANEL MOUNTING

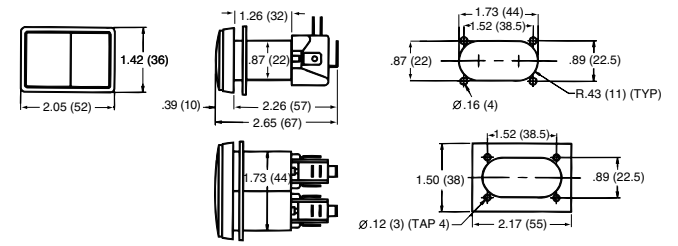

Large Square Low Profile

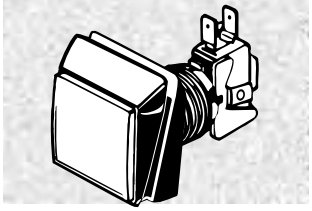

PANEL MOUNTING

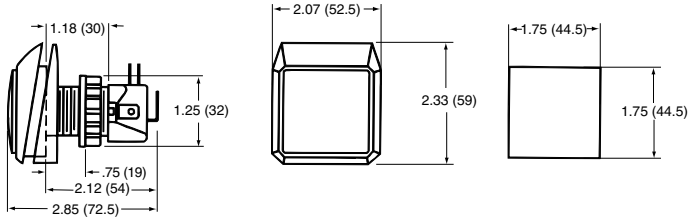

Large Square Low Profile

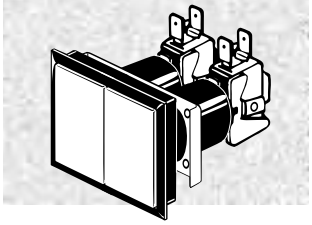

PANEL MOUNTING

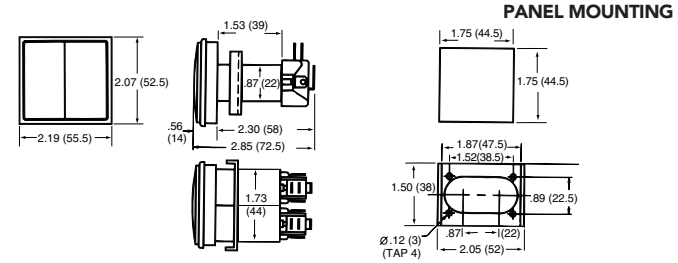

Rectangle Low Profile

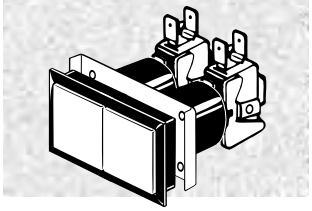

PANEL MOUNTING

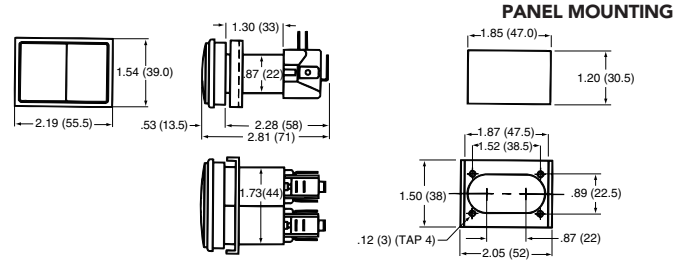

1st LEGEND COLOR CODE	2nd LEGEND COLOR CODE
X = Color	Y = Color
0 = Red	0 = Red
1 = White	1 = White
2 = Blue	2 = Blue
3 = Green	3 = Green
5 = Yellow	5 = Yellow
7 = Amber (Orange)	7 = Amber (Orange)

Part Number		Price per ea.	L/100
54-0004-D3XY	Dual IPB, Large Square Standard	11.55	10.35
54-0004-D5XY	Dual IPB, Rectangle Standard	11.55	10.35
57-0004-3XI	Large Square Inclined IPB	6.75	6.10

Part Number		Price per ea.	L/100
57-0004-D3XY	Dual IPB, Large Square Low Profile	11.55	10.35
57-0004-D5XY	Dual IPB, Rectangle Low Profile	11.55	10.35

LOW PROFILE ILLUMINATED PUSHBUTTONS

- Unique design provides "flat" profile to enhance playability
- Fits wood or metal control panels
- Microswitch reliability tested to 10,000,000 cycles
- Fitted standard with #161, 14V bulb
- Custom printing on legends available at nominal charge
- Can be used as lighted indicators with optional indicator washer (plunger will not depress)
- See 202 for LED

Low Profile Mounting Options

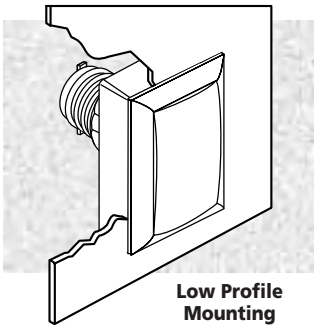

Low Profile Mounting

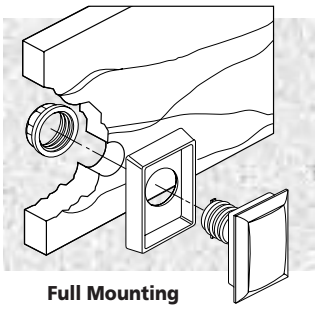

Full Mounting

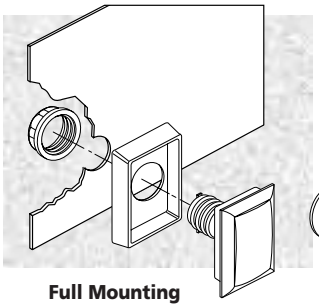

Full Mounting

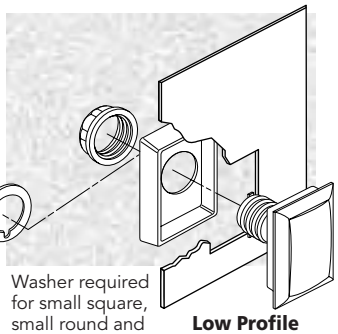

Washer required for small square, small round and medium round

Low Profile Mounting

LEGEND & LENS CAP: X = Color

0 = Red	5 = Yellow
1 = White	7 = Amber (Orange)
2 = Blue	
3 = Green	

Part Number		Price per ea.	L/100
57-0004-3X	Large Square Low Profile 14V #161 lamp, .250 micro.	6.75	6.10
57-0004-4X	Small Square Low Profile 14V #161 lamp, .250 micro.	6.75	6.10
57-0004-5X	Rectangular Low Profile 14V #161 lamp, .250 micro.	6.75	6.10
57-0004-2X	Small Round Low Profile 14V #161 lamp, .250 micro.	6.75	6.10
57-0004-6X	Medium Round Low Profile 14V #161 lamp, .250 micro.	6.75	6.10
71-0004-TX	Triangle Low Profile 14V #161 Lamp, .250 micro.	6.75	6.10

Large Square

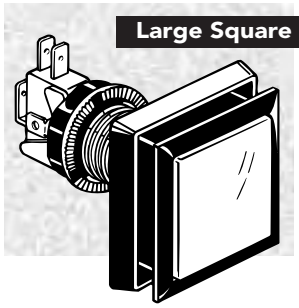

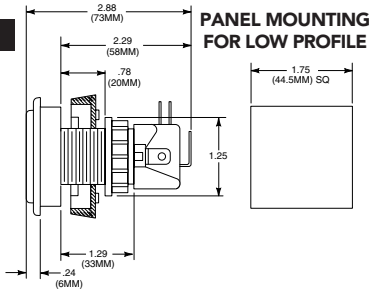

Small Square

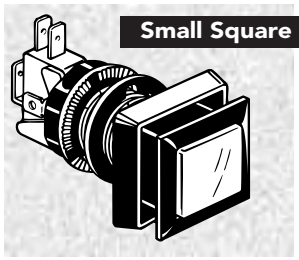

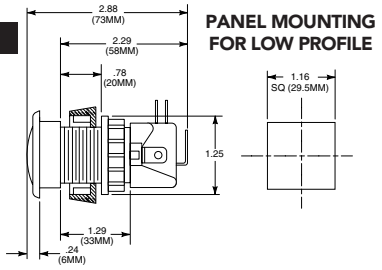

Rectangular

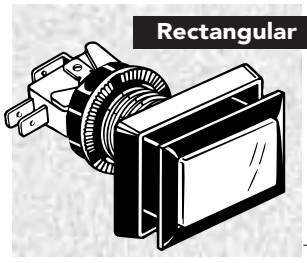

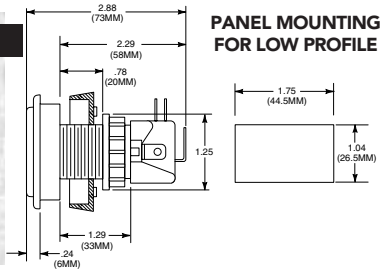

Small Round

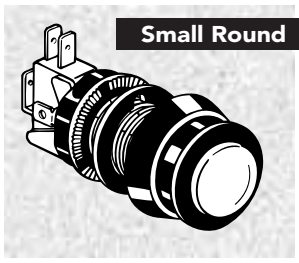

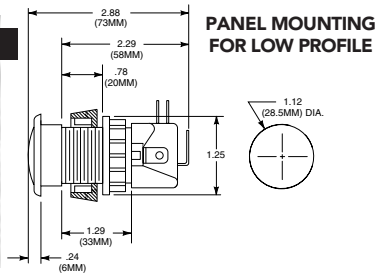

Medium Round

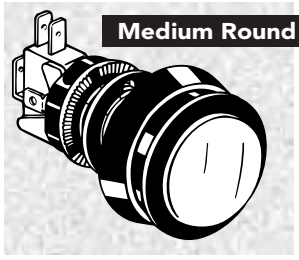

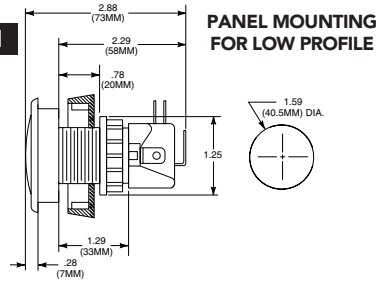

Triangle

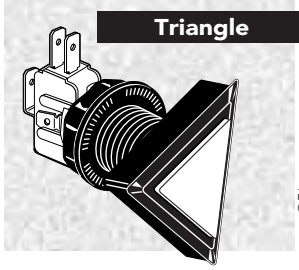

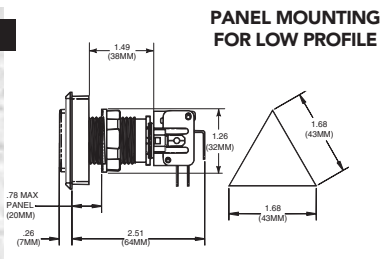

© HAPP CONTROLS

POKER/VLT PUSHBUTTONS

- Designed to retrofit all existing VLT (Video Lottery Terminals) and draw poker applications using .87"/22mm square mounting hole
- Designed to resist spills and sticking
- Designed for high reliability and long life, tested to 10 million+ cycles
- Small size, low profile, provides maximum player comfort
- Unique design, with separable lamp/switch holder, allows easy lamp changing while holding switch very securely
- Full .020"/.5mm Thickness on lamp terminals holds lamp connectors securely
- Contacts for lamp base are two-legged to assure reliable contact with lamp
- .062" ø grounding terminal is optional
- Gold contact subminiature .110 terminals microswitch fitted as standard
- 6.3V, T-1 3/4 wedge base lamp is standard
- 14V, #73 or 28V, #85 lamps optional
- White legend and clear lens cap fitted as standard
- Additional colors of legend and lens cap are available
- Custom legend lettering designs and artwork available at nominal charge
- Translucent color bezel available (57-8000-XX)
- See page 202 for VLT wrench and VLT pushbutton covers

Small Round

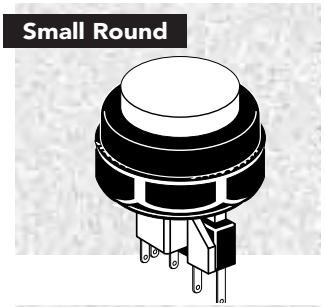

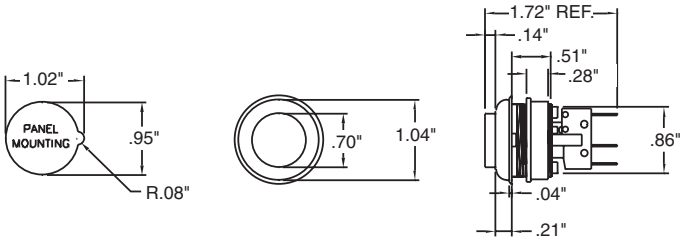

Elliptical

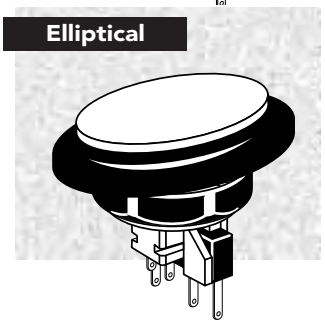

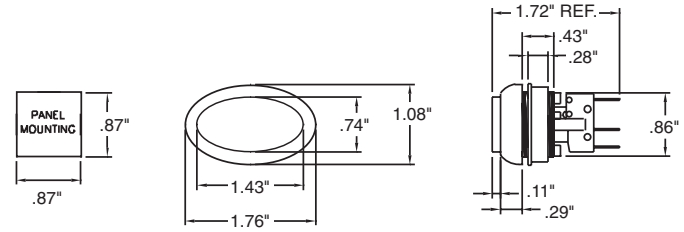

Small Square

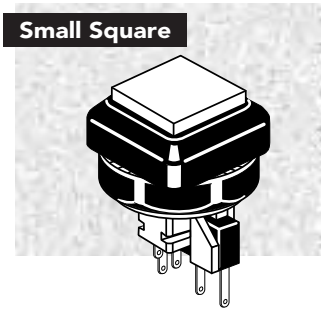

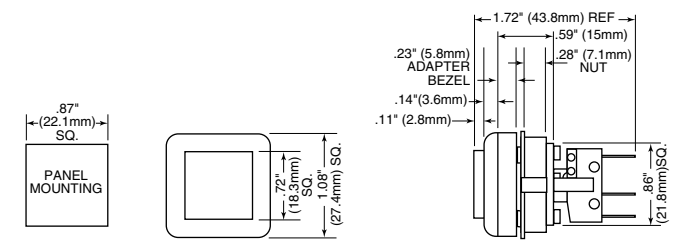

Medium Rectangle

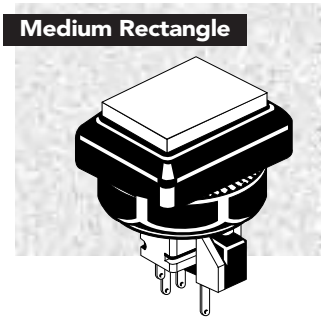

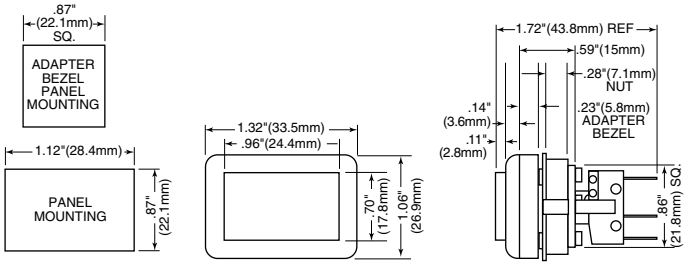

Rectangle

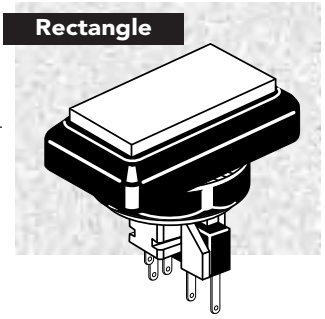

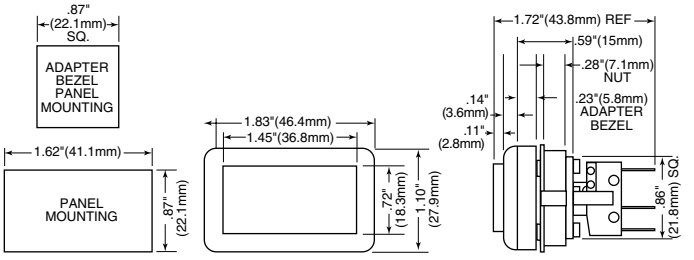

LEGEND & LENS CAP: X = Color

0 = Red	5 = Yellow
1 = White	7 = Amber (Orange)
2 = Blue	
3 = Green	

Part Number		Price per ea.	L/100
57-2000-3X	Small Round VLT Pushbutton	9.15	8.50
57-2000-4X	Small Square VLT Pushbutton	9.15	8.50
57-2000-5X	Rectangular VLT Pushbutton	9.15	8.50
57-2000-6X	Medium Rectangle VLT Pushbutton	9.15	8.50
57-2000-8X	Elliptical VLT Pushbutton	9.15	8.50

See page 202 for LEDs for Pushbuttons.

POKER/VLT PUSHBUTTONS REPLACEMENT PARTS

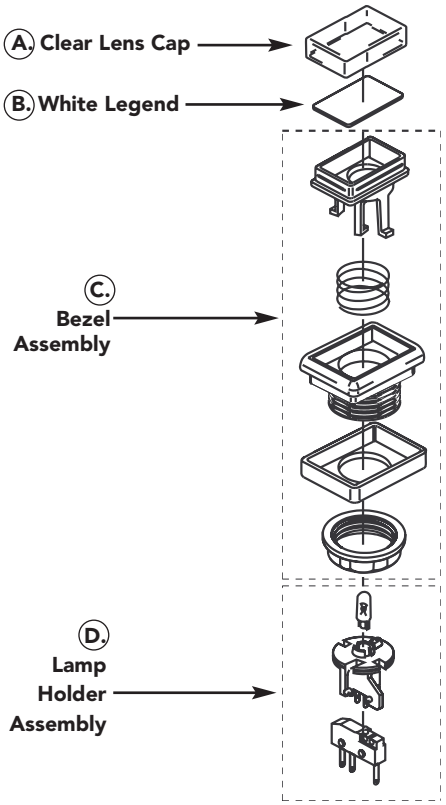

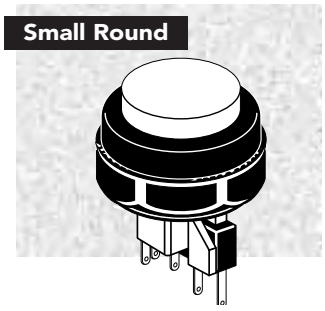

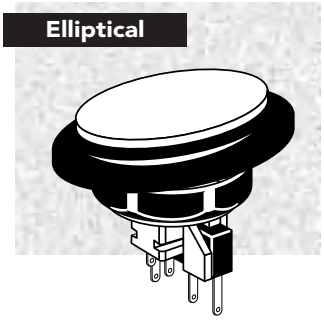

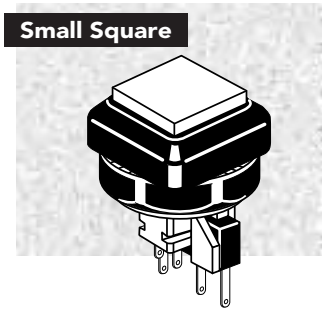

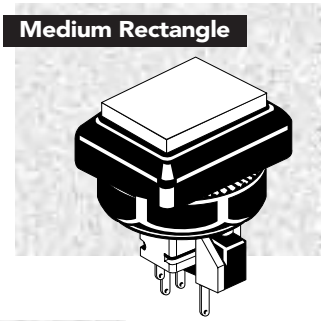

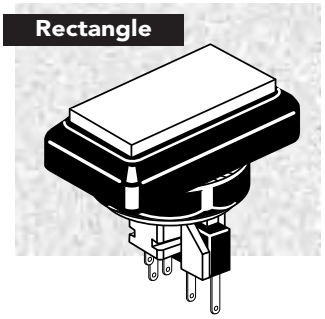

Button Style	A Clear Lens Cap	Price	B White Legend	Price	C Bezel Assy	Price	D Lampholder Assembly	Price
Small Round	57-3310-08	.96	57-3300-01	.61	57-4700-00	3.75	57-6001-90	6.15
Elliptical	57-3810-08	.96	57-3800-01	.61	57-4100-00	3.75	57-6001-90	6.15
Small Square	57-3410-08	.96	57-3400-01	.61	57-4400-00	3.75	57-6001-90	6.15
Medium Rectangle	57-3610-08	.96	57-3600-01	.61	57-4600-00	3.75	57-6001-90	6.15
Rectangle	57-3510-08	.96	57-3500-01	.61	57-4500-00	3.75	57-6001-90	6.15

Note: Lampholder Assembly includes #86 lamp and yellow CHERRY DA3 switch 95-4118-00

BUTTON PLUGS FOR VLT PUSHBUTTONS

- For use in metal control panels
- Fills in unused button holes
- Two sizes to choose from
- Comes with nut
- Fits in .87" hole

Part Number		Price per ea.
52-6209-00	Button Plug, Medium Rectangle for VLT with nut	1.10
52-6210-00	Button Plug, Rectangle VLT with nut	1.10

© HAPP CONTROLS

BUDGET POSI-LOK ILLUMINATED BUTTONS

NEW

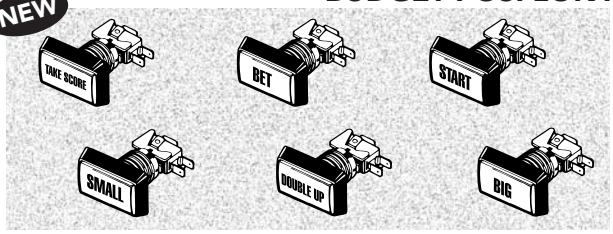

- New Posi-Lok design assures positive fit
- Available in rectangle size only
- Each button ships with printed legend plate installed in button assembly
- .250" terminal microswitch and #161 14vdc T-3-1/4 incandescent lamp assembled into lampholder assembly as standard
- Optional Cherry .250" terminal microswitch available
- Various button sets available, packaged as a set for your convenience
- For 8-line harness see page 186

Part Number	Printing	Qty per kit	Color	Price per kit
54L-KIT1-100P BUDGET BUTTON SET #1				**16.75**
54L-0004-517P7Z	"DOUBLE UP"	1	Amber	
54L-0004-510P8Z	"TAKE SCORE"	1	Red	
54L-0004-510P9Z	"BET"	1	Red	
54L-0004-515P3Z	"SMALL"	1	Yellow	
54L-0004-513P5Z	"BIG"	1	Green	
54L-0004-512P1Z	"START"	1	Blue	
54L-KIT2-100P BUDGET BUTTON SET #2				**16.75**
54L-0004-517P7Z	"DOUBLE UP"	1	Amber	
54L-0004-510P8Z	"TAKE SCORE"	1	Red	
54L-0004-510P10Z	"PLAY/CREDIT"	1	Red	
54L-0004-515P3Z	"SMALL"	1	Yellow	
54L-0004-513P5Z	"BIG"	1	Green	
54L-0004-512P1Z	"START"	1	Blue	
54L-KIT3-100Z BUDGET BUTTON SET #3				**16.75**
54L-0004-511P7Z	"DOUBLE UP"	1	White	
54L-0004-511P8 Z	"TAKE SCORE"	1	White	
54L-0004-511P10Z	"PLAY/CREDIT"	1	White	
54L-0004-511P3Z	"SMALL"	1	White	
54L-0004-511P5Z	"BIG"	1	White	
54L-0004-511P1Z	"START"	1	White	
54L-KIT4-100Z BUDGET BUTTON SET #4				**16.75**
54L-0004-510P17Z	"PRESS FOR TICKET"	1	Red	
54L-0004-513P4Z	"TAKE"	1	Green	
54L-0004-510P2Z	"DOUBLE"	1	Red	
54L-0004-515P3Z	"SMALL"	1	Yellow	
54L-0004-510P10Z	"PLAY/CREDIT"	1	Red	
54L-0004-515P18Z	"BIG/STOP"	1	Yellow	
54L-KIT5-100Z BUDGET BUTTON SET #5				**26.65**
54L-0004-518P12Z	"DEAL"	1	White	
54L-0004-510P13Z	"STAND"	1	Red	
54L-0004-515P14Z	"CANCEL"	1	Yellow	
54L-0004-518P15Z	"DISCARD"	5	White	
54L-0004-513P16Z	"DRAW"	1	Green	
54L-0004-515P10Z	"PLAY/CREDIT"	1	Yellow	
54L-KIT6-100Z BUDGET BUTTON SET #6				**25.00**
54L-0004-515P14Z	"CANCEL"	1	Yellow	
54L-0004-510P13Z	"STAND"	1	Red	
54L-0004-513P12Z	"DEAL"	1	Green	
54L-0004-510P10Z	"PLAY/CREDIT"	1	Red	
54L-0004-518P15Z	"DISCARD"	3	White	
54L-0004-518P19Z	"HI/LOW DISCARD/ RECALL"	2	White	
54L-KIT7-100Z BUDGET BUTTON SET #7				**33.30**
54L-0004-518P20Z	"DEAL/DRAW"	1	White	
54L-0004-518P6Z	"PLAY"	1	White	
54L-0004-518P14Z	"CANCEL"	1	White	
54L-0004-518P4Z	"TAKE"	1	White	
54L-0004-518P2Z	"DOUBLE"	1	White	
54L-0004-511P5Z	"BIG"	1	White	
54L-0004-511P3Z	"SMALL"	1	White	
54L-0004-518P15Z	"DISCARD"	5	White	

Lamp Assembly Installation
Happ Controls has developed the exclusive "Posi-Lok" design to assure a positive fit between the button bezel and the lampholder assembly. Simply insert lampholder assembly into button bezel (step 1), make sure that the notch on the lampholder assembly is aligned with the tab on the bezel assembly (step 2), then twist or turn the lampholder assembly until it locks in place (step 3).

EXCLUSIVE!

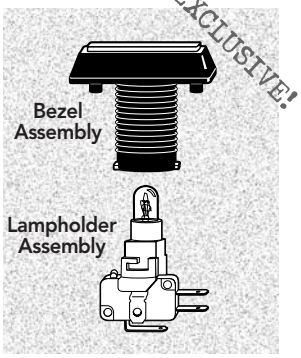

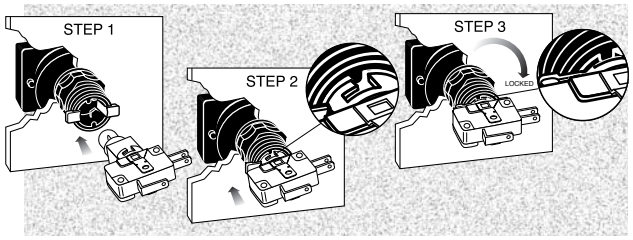

Part Number	Printing	Color	Price per ea.
54L-0004-510P9Z	"BET"	Red	2.95
54L-0004-513P5Z	"BIG"	Green	2.95
54L-0004-511P5Z	"BIG"	White	2.95
54L-0004-512P25Z	"BIG/ALL STOP"	Blue	2.60
54L-0004-515P18Z	"BIG/STOP"	Yellow	2.95
54L-0004-515P14Z	"CANCEL"	Yellow	2.95
54L-0004-518P14Z	"CANCEL"	White	2.95
54L-0004-512P12Z	"DEAL"	Blue	2.60
54L-0004-513P12Z	"DEAL"	Green	2.95
54L-0004-518P12Z	"DEAL"	White	2.95
54L-0004-518P20Z	"DEAL/DRAW"	White	2.95
54L-0004-518P15Z	"DISCARD"	White	2.95
54L-0004-510P2Z	"DOUBLE"	Red	2.95
54L-0004-518P2Z	"DOUBLE"	White	2.95
54L-0004-513P28Z	"DOUBLE/STOP 1"	Green	2.60
54L-0004-517P7Z	"DOUBLE-UP"	Amber	2.95
54L-0004-511P7Z	"DOUBLE-UP"	White	2.95
54L-0004-513P16Z	"DRAW"	Green	2.95
54L-0004-515P16Z	"DRAW"	Yellow	2.60
54L-0004-518P22Z	"EXTRA CARDS/ DISCARD/RECALL"	White	2.60
54L-0004-518P19Z	"HI/LOW DISCARD/ RECALL"	White	2.95
54L-0004-518P6Z	"PLAY"	White	2.95
54L-0004-512P24Z	"PLAY/CHANGE CARD"	Blue	2.60
54L-0004-510P10Z	"PLAY/CREDIT"	Red	2.95
54L-0004-511P10Z	"PLAY/CREDIT"	White	2.95
54L-0004-513P10Z	"PLAY/CREDIT"	Green	2.70
54L-0004-515P10Z	"PLAY/CREDIT"	Yellow	2.95
54L-0004-510P17Z	"PRESS FOR TICKET"	Red	2.95
54L-0004-511P11Z	"PRINT TICKET"	White	2.60
54L-0004-515P3Z	"SMALL"	Yellow	2.95
54L-0004-511P3Z	"SMALL"	White	2.95
54L-0004-510P13Z	"STAND"	Red	2.95
54L-0004-512P1Z	"START"	Blue	2.95
54L-0004-511P1Z	"START"	White	2.95
54L-0004-513P4Z	"TAKE"	Green	2.95
54L-0004-518P4Z	"TAKE"	White	2.95
54L-0004-510P23Z	"TAKE HALF/STAND"	Red	2.60
54L-0004-510P8Z	"TAKE SCORE"	Red	2.95
54L-0004-511P8Z	"TAKE SCORE"	White	2.95
54L-0004-517P21Z	"TICKET"	Amber	2.70
54L-0004-518P21Z	"TICKET"	White	2.95

HAPP CONTROLS REPLACEMENT ILLUMINATED BUTTON SETS FOR IGT SLOT MACHINES

- Made with the highest quality materials
- Designed to resist spills and sticking
- Designed for high reliability and long life, tested to 10 million+ cycles
- Unique design with separable lamp/switch holder allows easy lamp changing while holding switch very securely

REPLACEMENT BUTTON SET FOR IGT PE PLUS SLANT TOP SLOT MACHINES

- All buttons have clear caps, white legends and black print, except the "Change" button, which has a red legend and white print
- Fitted with #86 6.3 volt lamp
- Set includes: 5 Rectangular "Hold/Cancel" buttons
  1 Rectangular "Cash Out" button
  1 Rectangular "Bet One Credit" button
  1 Rectangular "Play 5 Credits" button
  1 Rectangular "Deal/Draw" button
  1 Small Square "Change" button

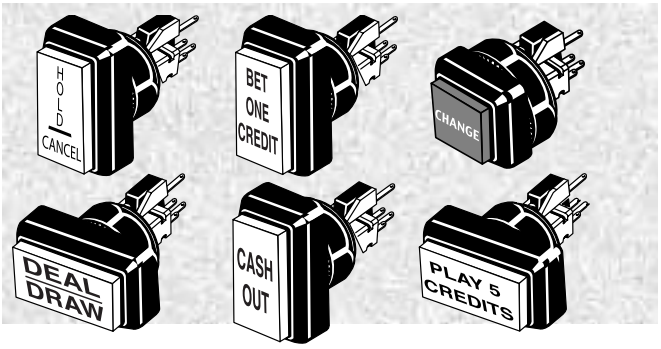

Complete Individual Replacement Buttons:

Part Number		Price per ea.
57-2000-51800006	"Hold/Cancel"	8.70
57-2000-518605	"Cash Out"	8.70
57-2000-518HP610	"Bet One Credit"	8.70
57-2000-518220	'Play 5 Credits"	8.70
57-2000-518B56	"Deal/Draw"	8.70
57-2SP2-408333	"Change"	8.70

Part Number		Price per ea.
57-KIT-100	Complete Button Set for IGT Plus Slant Top Slot Machine	68.80

REPLACEMENT BUTTON SET FOR IGT PE PLUS UPRIGHT SLOT MACHINES

- Small square buttons with clear caps
- All buttons have white legends and black print, except the "Change" button, which has a red legend and white print
- Fitted with #86 6.3 volt lamp
- Set includes: 5 "Hold/Cancel" buttons
  1 "Cash Out" button
  1 "Change" button
  1 "Max Bet" button
  1 "Deal/Draw" button
  1 "Bet One" button

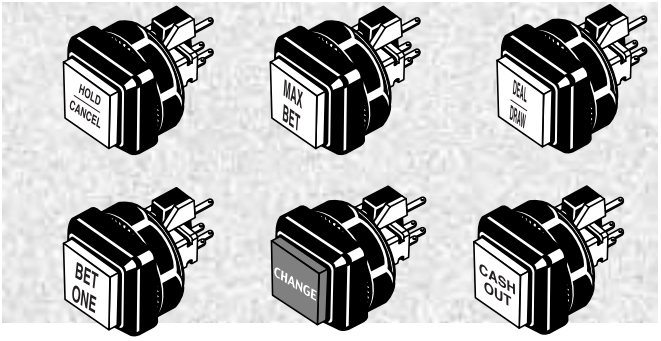

Complete Individual Replacement Buttons:

Part Number		Price per ea.
57-2SP0-418311	"Hold/Cancel"	8.70
57-2SP2-418332	"Cash Out"	8.70
57-2SP2-408333	"Change"	8.70
57-2SP0-418330	"Max Bet"	8.70
57-2SP0-418248	"Deal/Draw"	8.70
57-2SP0-418331	"Bet One"	8.70

Part Number		Price per ea.
57-KIT-200	Complete Button Set for IGT PE Plus Upright Slot Machine	68.80

REPLACEMENT BUTTON SET FOR IGT S PLUS UPRIGHT SLOT MACHINES

- Large and small square buttons with clear caps, white legends and black print
- Fitted with #555 6.3 volt lamp
- Fits IGT S Plus Machines 1995 to present
- Set includes: 1 Large Square "Spin Reels" button
  1 Large Square"Play Max Credits" button
  1 Small Square "Bet One Credit" button
  1 Small Square "Change" button
  1 Small Square "Cash/Credit" button

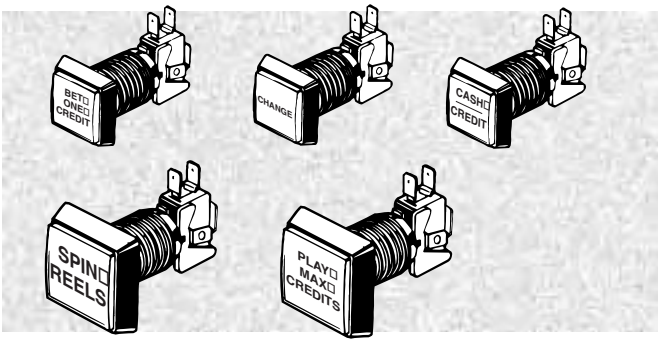

Complete Individual Replacement Buttons:

Part Number		Price per ea.
54-0006-318HP73	"Spin Reels"	8.70
54-0006-318HP82	"Play Max Credits"	8.70
54-0006-418HP593	"Bet One Credit"	8.70
54-0006-418HP609	"Change"	8.70
54-0006-4181667	"Cash/Credit"	8.70

Part Number		Price per ea.
54-KIT-300	Complete Button Set for IGT S+ Upright Slot Machine	34.45

MEGA BUTTON ASSEMBLY

- Translucent polycarbonate pushbutton
- Plastic covered spring
- 14 gauge steel base
- Additional colors can be produced upon request
- Various colors available
- Custom artwork/printing inside button available

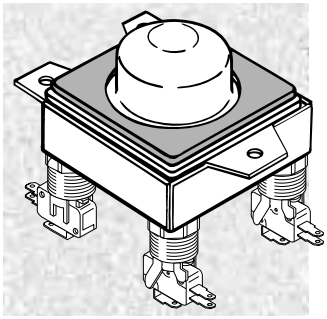

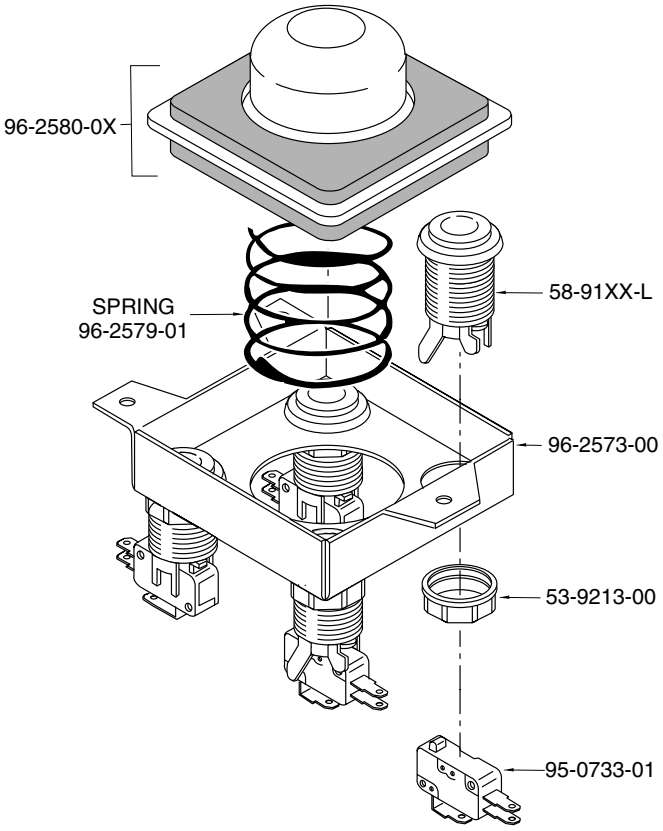

PANEL MOUNTING

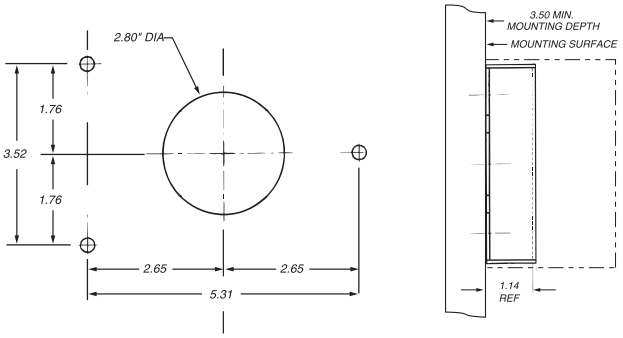

COLOR CODE: X = Color

0 = Red	4 = Purple
1 = White	5 = Yellow
2 = Blue	7 = Orange
3 = Green	

Part Number		Price per ea.	L/25
53-870X-00	Mega Button	39.85	36.25

COMPETITION PUSHBUTTON

- Unique, convex design for increased speed and accuracy
- New longer design – easier to use with 3/4" wood control panels with Lexan
- Mounts into wood or metal control panels, 1-1/8" hole
- Microswitch reliability – tested to 10,000,000 cycles.
- .187" Terminal Microswitch
- Gold contact microswitch available
- Durable Nylon Plastic

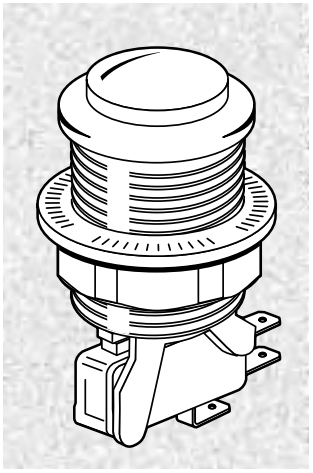

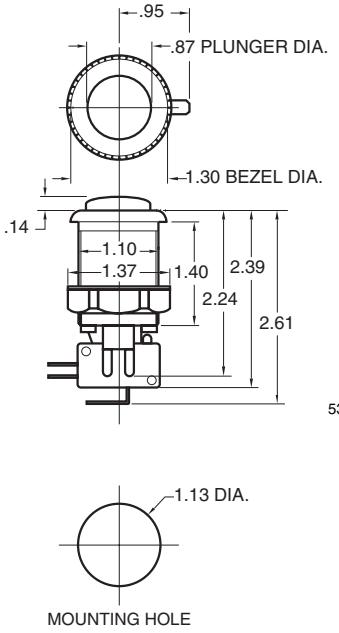

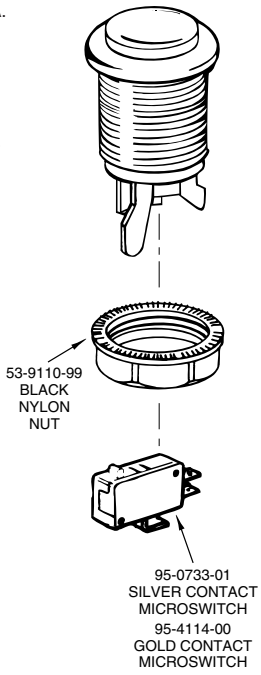

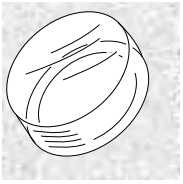

54-1006-00
Protective Cover

COLOR CODE: XX = Color

10 = Red
11 = White
12 = Blue
13 = Green
14 = Purple
15 = Yellow
16 = Black

Part Number		Price per ea.	L/100
58-96XX-L	Competition Pushbutton	1.75	1.65
54-1006-00	Protective Cover for Competition Pushbutton	2.40	2.25

PUSHBUTTON WITH HORIZONTAL MICROSWITCH

- Fits wood or metal control panels
- New longer design: Easier to use within 3/4" wood control panels with Lexan
- Microswitch reliability tested to 10,000,000 cycle
- .187" Terminal Microswitch
- GOLD contact microswitch available
- Durable NYLON material
- Pushbutton mounts in 1-1/8" hole
- Protective cover also available

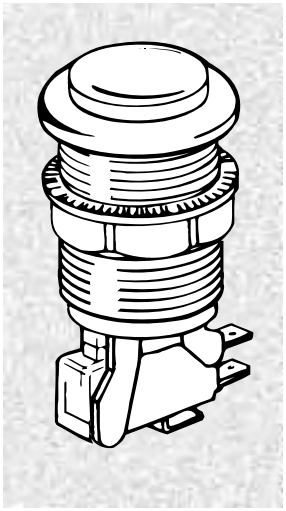

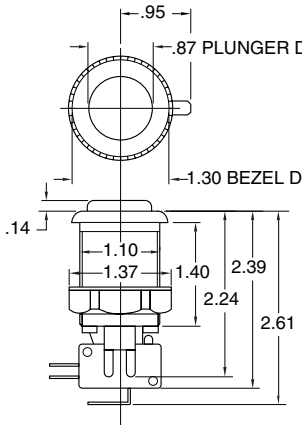

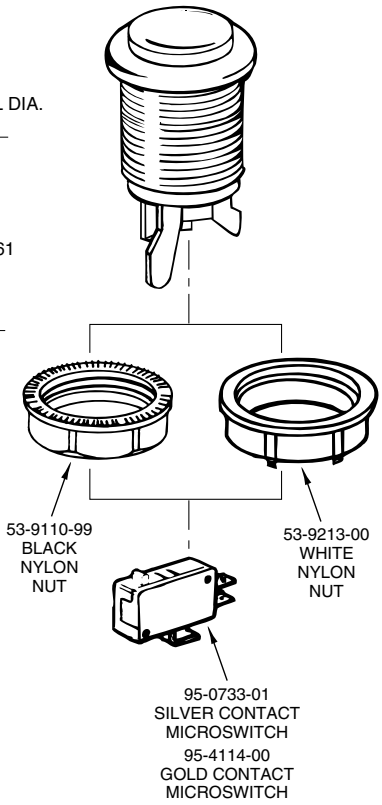

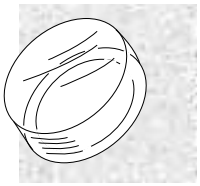

54-1006-00
Protective Cover

COLOR CODE/PLAYER SELECTION

58-9100-L = Red
58-9111-L = White
58-9122-L = Blue
58-9133-L = Green
58-9144-L = Purple
58-9155-L = Yellow
58-9166-L = Black
58-9177-L = Orange
58-9111-L1PLY = 1 Player, White
58-9111-L2PLY = 2 Player, White
58-9111-L3PLY = 3 Player, White
58-9111-L4PLY = 4 Player, White

1Player
58-9111-L1PLY

2Player
58-9111-L2PLY

3Player
58-9111-L3PLY

4Player
58-9111-L4PLY

Part Number		Price per ea.	L/100
58-91XX-L	Pushbutton with Horizontal Microswitch	1.85	1.75
58-9111-LXPLY	1 – 4 Player Pushbutton with Horizontal Microswitch	1.95	1.80
54-1006-00	Protective Cover for Horizontal Pushbutton	2.40	2.25

ULTIMATE PUSHBUTTON WITH MICROSWITCH

- Fits all thickness of control panels from .060 (1/16") metal to .750 (3/4") wood
- 100% NYLON construction
- Microswitch reliability tested to 10,000,000 cycle
- .187" Terminal Microswitch
- GOLD contact microswitch available
- Sideways switch actuation – fast and responsive
- Microswitch is held firmly in place via exclusive one screw design
- Pushbutton mounts in 1-1/8" hole
- Protective cover also available

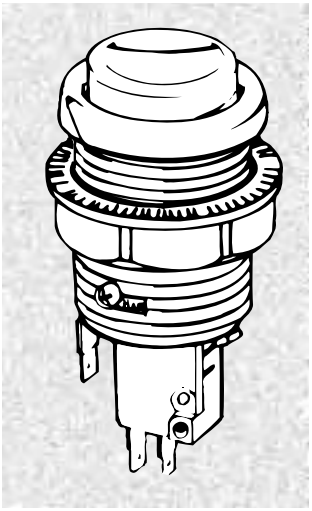

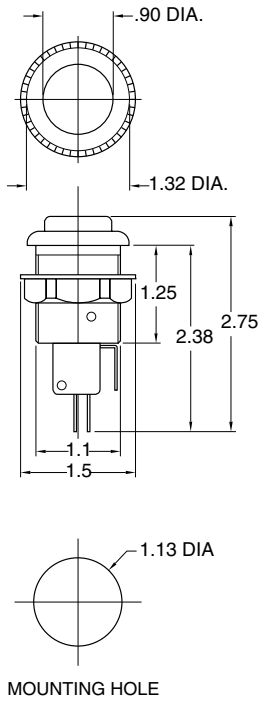

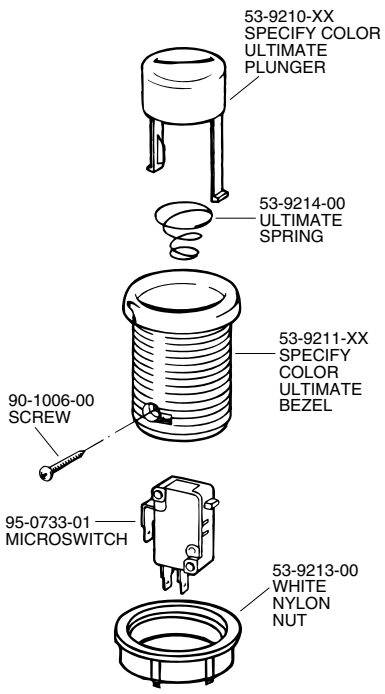

COLOR CODE

XX = Color
10 = Red
11 = White
12 = Blue
13 = Green
15 = Yellow
16 = Black
18 = Purple

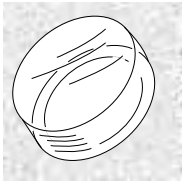

54-1006-00
Protective Cover

Part Number		Price per ea.	L/100
53-9200-XX	Ultimate Pushbutton & Switch	1.75	1.65
54-1006-00	Protective Cover f/Ultimate Pushbutton	2.40	2.25

© HAPP CONTROLS

MINIATURE MOMENTARY CONTACT PUSHBUTTONS

- Small size to allow use in numerous applications
- Momentary contact

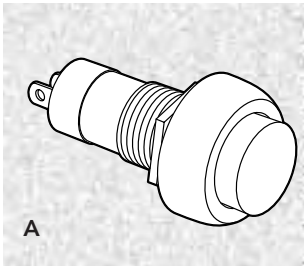

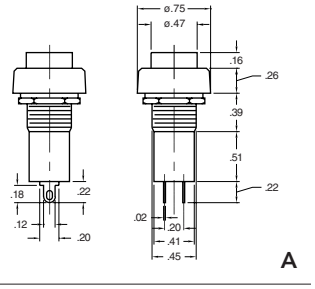

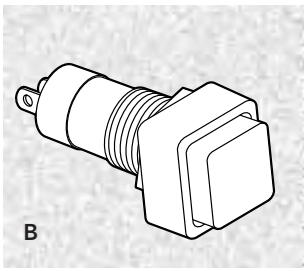

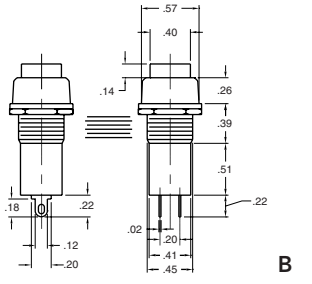

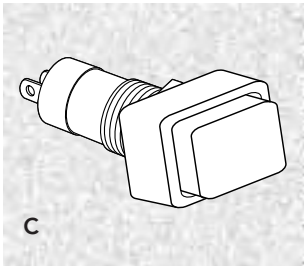

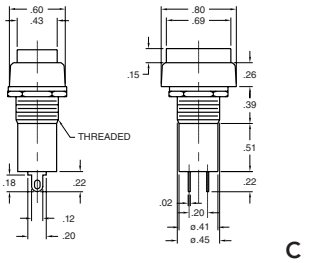

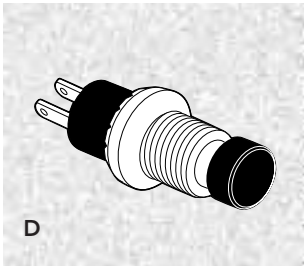

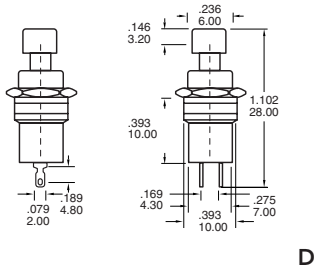

Part Number	Type		Price per ea.	L/100
49-0577-00	A	Miniature Round Pushbutton, Black Bezel, Red Center	.79	.71
49-0577-01	A	Miniature Round Pushbutton, Black and White Bezel	.79	.71
49-0577-05	A	Miniature Round Pushbutton, Black Bezel, Yellow Center	.79	.71
49-0578-00	B	Miniature Square Pushbutton, Black Bezel, Red Center	.79	.71
49-0578-11	B	Miniature Square Pushbutton Black Bezel, White Center	.79	.71
49-3037-00	C	Miniature Rectangle Pushbutton Black Bezel, Red Center	.89	.84
95-0011-00	D	Mini-Round Pushbutton, Red	1.15	1.05

SQUARE BUTTON HOUSING

- Used on Fortune I Poker games
- 3/4" x 3/4" lens w/spring mounting clip
- Double pole single throw

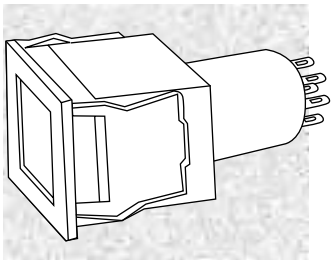

Part Number		Price per ea.
95-0835-00	Square Button Housing	19.90
95-0834-00	Clear Cap Only	3.00
95-0838-00	Base Only	4.95
95-0837-00	Legend Plate	1.85

MOMENTARY CONTACT PUSHBUTTON

- Small pushbutton with shallow mounting depth
- .110 quick connect terminals
- Momentary contact switch
- Switch life: 1,000,000 cycles
- Switch rating: 12vdc 0.1A, 5v 10mA

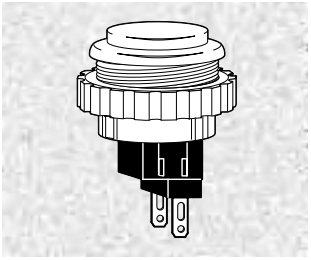

COLOR CODE

XX = Color
10 = Red
12 = Blue
13 = Green
15 = Yellow
17 = Orange

Mounting Dimensions

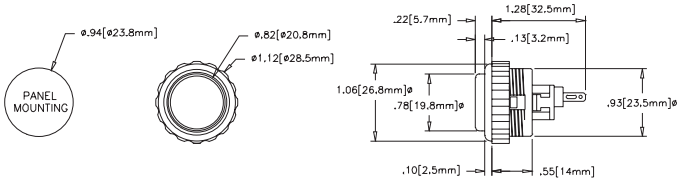

Part Number		Price per ea.
60-1200-XX	Momentary Contact Pushbutton	1.75

BUTTON PLUGS

- For use on both wood and metal control panels
- Fills in unused button holes
- Comes with nut
- Button plug fits a $1^{1}/_{8}$" (1.125) hole, for horizontal and Ultimate pushbuttons
- IPB plug fits a $^{31}/_{32}$" (.97") hole, for illuminated pushbuttons

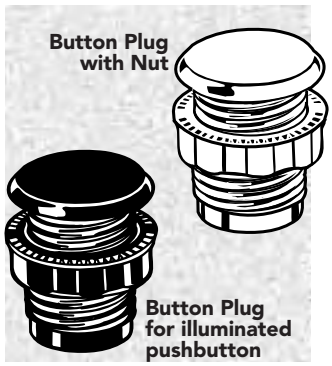

Part Number		Price per ea.	L/25
52-6212-00	Button Plug with Nut (1.13" dia.)	1.05	.91
52-6214-00	Button Plug for Illuminated Pushbutton with nut 31/32" (.97" dia.)	.91	.86

T 1-3/4 AND T 3-1/4 WEDGE BASE LED

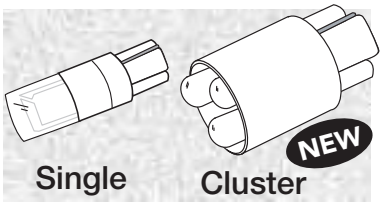

- Save time and money by replacing your lamps with LEDs
- LEDs are maintenance free, lasting an average of 100,000 hours
- LEDs can reduce power consumption up to 80%
- Great for use on illuminated pushbuttons including poker / VLT pushbuttons
- Replace standard T 1-3/4 and T 3-1/4 wedge base lamps
- T 1-3/4 will also fit T 1-1/2 bases
- Designed to be drop-in replacements
- Direct replacements for 73, 86, 161, 194, 259 bulbs
- LEDs are equipped with a resistor

T 1-3/4 Base

Part Number	Color	LED Type	Volts	Lamp	Price per ea.	L/100
91-5WB-61W	White	Single (1)	6 vdc	#86	3.70	3.05
91-5WB-51Y	Yellow	Single (1)	6 vdc	#86	3.70	3.05
91-5WB-51R	Red	Single (1)	6 vdc	#86	3.70	3.05
91-5WB-51G	Green	Single (1)	6 vdc	#86	3.70	3.05
91-5WB-51B	Blue	Single (1)	6 vdc	#86	3.70	3.05
91-5WB-121W	White	Single (1)	12 vdc	#73	3.70	3.05
91-5WB-121Y	Yellow	Single (1)	12 vdc	#73	3.70	3.05
91-5WB-121R	Red	Single (1)	12 vdc	#73	3.70	3.05
91-5WB-121G	Green	Single (1)	12 vdc	#73	3.70	3.05
91-5WB-121B	Blue	Single (1)	12 vdc	#73	3.70	3.05

T 1-1/4 Base

Part Number	Color	LED Type	Volts	Lamp	Price per ea.	L/100
91-10WB-53W	White	Cluster (3)	6 vdc	#259	4.60	4.05
91-10WB-53Y	Yellow	Cluster (3)	6 vdc	#259	4.60	4.05
91-10WB-53R	Red	Cluster (3)	6 vdc	#259	4.60	4.05
91-10WB-53G	Green	Cluster (3)	6 vdc	#259	4.60	4.05
91-10WB-53B	Blue	Cluster (3)	6 vdc	#259	4.60	4.05
91-10WB-123W	White	Cluster (3)	12 vdc	#161, #194	4.60	4.05
91-10WB-123Y	Yellow	Cluster (3)	12 vdc	#161, #194	4.60	4.05
91-10WB-123R	Red	Cluster (3)	12 vdc	#161, #194	4.60	4.05
91-10WB-123G	Green	Cluster (3)	12 vdc	#161, #194	4.60	4.05
91-10WB-123B	Blue	Cluster (3)	12 vdc	#161, #194	4.60	4.05

ILLUMINATED PUSHBUTTON WRENCH

- Dual purpose… one end suitable for illuminated pushbuttons, other end is for pushbuttons with microswitch (Ultimate Pushbutton and with Horizontal Microswitch Pushbuttons)

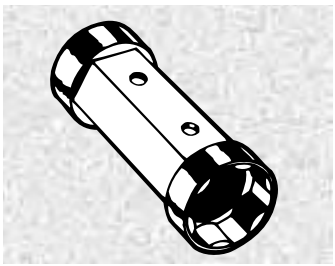

Part Number		Price per ea.	L/25
53-8002-00	Pushbutton Wrench	2.40	1.90

VLT PUSHBUTTON WRENCH

- Dual purpose… one end suitable for VLT pushbuttons, other end suitable for illuminated pushbuttons

Part Number		Price per ea.	L/25
53-8003-00	VLT Pushbutton Wrench	2.40	1.90

ILLUMINATED PUSHBUTTON COVERS

- Protects against spills and scratches
- Duraflex Polyurethane Film

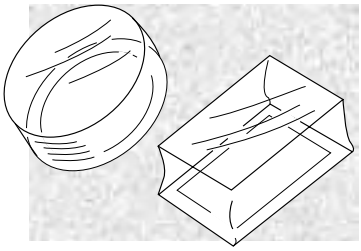

Part Number		Price per ea.	L/25
54-1001-00	Pushbutton Covers (Small Round)	2.40	2.25
54-1004-00	Pushbutton Covers (Small Square)	2.40	2.25
54-1005-00	Pushbutton Covers (Rectangle)	2.40	2.25
54-1003-00	Pushbutton Covers (Large Round)	2.65	2.40
54-1000-00	Pushbutton Covers (Large Square)	2.65	2.40
54-1002-00	Pushbutton Covers (Medium Round)	2.65	2.40

VLT BUTTON COVERS

- Protects against spills and scratches
- Durable Duraflex Polyurethane Film

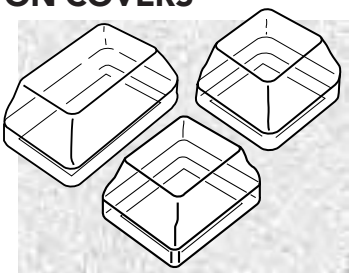

Part Number		Price per ea.	L/25
54-1011-00	Pushbutton Cover for Rectangle VLT w/adapter bezel above panel	2.75	2.65
54-1011-01	Pushbutton Cover for Rectangle VLT w/adapter bezel below panel	2.75	2.65
54-1012-00	Pushbutton Cover for Square VLT w/adapter bezel above panel	2.75	2.65
54-1012-01	Pushbutton Cover for Small Square VLT w/o adapter bezel below panel	2.75	2.65
54-1013-00	Pushbutton Cover for Medium Rectangle VLT w/adapter bezel above panel	2.75	2.65
54-1013-01	Pushbutton Cover for Medium Rectangle VLT w/o adapter bezel below panel	2.75	2.65

IDENTIFICATION TAGS

- For use on all control panels
- Clear polycarbonate plastic

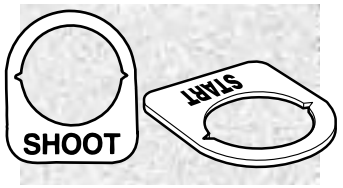

Part Number		Price per ea.	L/25
95-4009-00	Blank I.D. Tag	.24	.22

Visit Our Web Site:
happcontrols.com
for *NEW* Product Updates!!

© HAPP CONTROLS

STANDARD CHANGE-MAKERS FRONT LOAD CHANGERS

Standard Change-Makers, Inc. has been delivering high quality Change, Ticket and Token machines since 1955. Their products are tough, dependable and backed by outstanding service.

THE EC100 CHANGER

EC100 Changer | EC100 With Base | EC100 With Base&Header

- Heavy 12 gauge steel
- 3,200 quarter capacity
- One high speed steel hopper
- Easy coin dumping with bulk loading design

SPECIFICATIONS:

DIMENSIONS:	WIDTH	HEIGHT	DEPTH
Cabinet	8-1/2"	32"	13"
Base	8-1/2"	30"	13"
Header	8-1/2"	10"	13"

Header, Machine and Base total height is 72".
Meets AMERICANS WITH DISABILITIES ACT standards.

CABINETRY:
Heavy 12 gauge steel with front opening door designed specifically for security. Contains a sturdy "T" handle lock assembly with reinforcing. Uses an ACE brand plug lock as standard equipment. Cabinet is pre-drilled with holes for wall or base mounting. Attractive, scratch resistant Lexan front door graphics.

HOPPERS:
One high speed steel hopper with a 3,200 quarter capacity. Hopper can be used without modification for one dollar coins. Bulk loading design with easy coin dumping.

BILL ACCEPTOR:
Coinco BA 30B, with 500 bill stacking capacity. Accepts $1, $5, $10 and $20's. Other bill acceptors are available. Machine is designed to be used with most 120 VAC bill acceptors.

OPTIONS:
Base and header option. Base is constructed of sturdy 12 gauge steel with toe kick plate and levelers. Medeco Lock plug is available.

OTHER:
Submitted for ETL approval. Bill-in hard audit.
Can be shipped UPS. 2 year limited warranty.

Part Number		Price per ea.
42-7284-00	EC100 Changer Only	1,566.65
42-7284-00B	EC100 Base Only	122.55
42-7284-00H	EC100 Header Only	58.95

THE EC200 CHANGER

EC200 Changer | EC200 With Base | EC200 With Base&Header

- Heavy 12 gauge steel
- 6,400 quarter capacity
- Two high speed steel hopper
- Easy coin dumping with bulk loading design

SPECIFICATIONS:

DIMENSIONS:	WIDTH	HEIGHT	DEPTH
Cabinet	13-1/2"	26"	13"
Base	13-1/2"	30"	13"
Header	13-1/2"	16"	13"

Header, Machine and Base total height is 72".
Meets AMERICANS WITH DISABILITIES ACT standards.

CABINETRY:
Heavy 12 gauge steel with front opening door designed specifically for security. Contains a sturdy "T" handle lock assembly with reinforcing. Uses an ACE brand plug lock as standard equipment. Cabinet is pre-drilled with holes for wall or base mounting. Attractive, scratch resistant Lexan front door graphics.

HOPPERS:
Two high speed steel hoppers, each with a 3,200 quarter capacity for a total of 6,400 quarters. Hopper can be used without modification for one dollar coins. Bulk loading design with easy coin dumping.

BILL ACCEPTOR:
Coinco BA 30B, with 500 bill stacking capacity. Accepts $1, $5, $10 and $20's. Other bill acceptors are available. Machine is designed to be used with most 120 VAC bill acceptors.

OPTIONS:
Base and header option. Base is constructed of sturdy 12 gauge steel. Base contains toe kick plate and levelers. The coin acceptance options available are either a high security (electronic) or low security (mechanical) acceptor. Knock out holes on door for easy coin acceptor field installation.
A Stacker for bill acceptors that holds 1,000 bills is available.
Medeco Lock plugs and a locking lid for hopper are also available.

OTHER:
Submitted for ETL approval. Bill-in hard audit.
Can be shipped UPS. 2 year limited warranty.

Part Number		Price per ea.
42-7285-00	EC200 Changer Only	2,024.60
42-7285-00B	EC200 Base Only	160.50
42-7285-00H	EC200 Header Only	71.55

STANDARD CHANGE-MAKERS BILL TO BILL EXCHANGER

- Dispenses ones, fives or tens as change for larger bills and is programmable to your preference
- Can accept $5, $10, $20, $50, $100
- Choice of Coinco MAG50BAB Validator (accepts $5, $10, $20) or Mars LE3901UL Validator (accepts $5, $10, $20, $50, $100)
- Capacity of 1,000 new or 750 used bills
- Secured with 2 high security Medeco locks
- Front or rear loading models available
- Cabinet is constructed of heavy 11 gauge welded steel; door is 8 gauge
- Equipped with a non-resettable counter for bills received in
- Size: 27-7/8" H x 16-7/8" W x 12" D
- Weight: 120 lbs.
- Drop shipped from Indiana

Part Number	Description	Loading	Accepts	Capacity	Price per ea.
42-8115-00	With Coinco MAG50BAB Validator	Front	$5, $10 $20	500	3,641.95
42-8116-00	With Coinco MAG50BAB Validator	Rear	$5, $10 $20	500	3,500.45
42-8109-00	With Mars LE3901UL Validator	Front	$5, $10, $20, $50, $100	600	4,312.95
42-8098-00	With Mars LE3901UL Validator	Rear	$5, $10, $20, $50, $100	600	4,312.95

BELT CHANGERS

- Open top casino style
- Specify nickel, dime, quarter or half dollar
- OK to mix and match denominations except if 50¢ change barrel is used

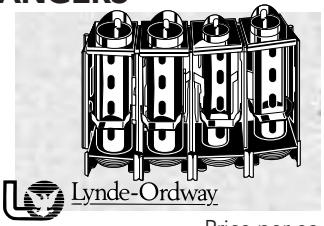

Part Number		Price per ea.
80-0282-00	Single Barrel	70.85
80-0281-00	Double Barrel	123.95
80-0280-00	Triple Barrel	191.55
80-0279-00	Four Barrel	227.70
80-0278-00	Five Barrel	242.90

REPLACEMENT PARTS FOR BELT CHANGERS

Part Number		Price per ea.
80-0277-00	$.01 change barrel	53.15
80-1002-25	$.25 change barrel	53.15
80-1001-00	$.05 change barrel	53.15
80-1003-00	$.50 change barrel	119.30
80-1004-00	Belt hook bracket, female	6.85
80-1005-00	Belt hook bracket, male	6.85
80-1006-00	Belt hook only	3.40
80-1007-00	Changer spring	1.65
80-1017-00	$.25 aluminum slide, 2 per	3.85
80-1018-00	$.05 aluminum slide, 3 per	3.85
80-1013-00	$.25 top slide	3.85
80-1014-00	$.05 top slide	3.85
80-1009-00	$.25 bottom slide	3.85
80-1010-00	$.05 bottom slide	3.85

KWIK-KOIN COIN DISPENSERS

- Easily dispense nickels, dimes and quarters
- Diecast chrome plated mechanism
- Case hardened aluminum slide

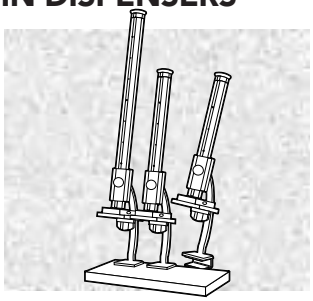

Lynde-Ordway

Tube Dispenser Only (Without Base)

Part Number	Dispenses	Capacity	Price per ea.
80-1029-00	5 Nickels	$10.00	66.30
80-1048-00	5 Dimes	$20.00	75.95
80-1023-00	4 Quarters	$37.50	66.30

Base Only (Without Tube Dispenser)

Part Number		Price per ea.
80-1035-00	1-Tube Unit	16.95
80-1043-00	2-Tube Unit	26.50
80-1042-00	3-Tube Unit	29.20
80-1041-00	4-Tube Unit	39.10

KWIK-KOIN DISPENSER PARTS

Part Number		Price per ea.
80-1021-00	Quarter Cap	7.30
80-1032-00	Nickel Funnel	16.50
80-1020-00	Quarter Funnel	11.90
80-1030-00	Nickel Slide	36.25
80-1049-00	Quarter Slide	30.15
80-1047-00	Nickel Keeper	18.30
80-1034-00	Dime Keeper	18.30
80-1022-00	Quarter Keeper	18.30
80-1036-00	Spring	3.35
80-1044-00	Bolt	3.25
80-1046-00	Nut	.94

© HAPP CONTROLS

AZKOYEN HOPPER

The **AZKOYEN HOPPER "E"** can be used in the majority of change or coin / token pay out applications since it is not coin specific and has features and options that make it very versatile.

- Available in 12vdc or 24vdc
- Normal hopper or natural overflow, that avoids sophisticated software to control the hopper overflow (this overflow level could be customized).
- High level switch to detect, working on a weight principle, when the hopper is full and to report back to the machine software so it can route the excess coins into the cashbox. This level is adjustable with a screw.
- Low level switch for empty hopper detection
- Two hoppers can be linked together to operate side by side for greater capacity in large pay out applications or to offer twin denomination pay out capability.
- Optical switch coin counting with a special feature that warranties a minimum pulse length of 18 milliseconds, avoiding special software treatment of the holes in coins or tokens.
- Pay out rate approximately 3 or 4 coins per second
- White disc

SPECIFICATIONS FOR AZKOYEN HOPPER

SUPPLY VOLTAGE:	12 / 24 vdc Stabilized
NORMAL CURRENT CONSUMPTION:	300 / 200 mAmp
MAXIMUM STARTING CURRENT:	3 / 1.5 Amps (+- 20%)
R.P.M.	20 / 24

ESTIMATED CAPACITY (DEPENDS ON COIN THICKNESS)

Coin Diameter	Coin Capacity
23.0 mm	1,000 coins
24.5 mm	600 coins
26.5 mm	670 coins

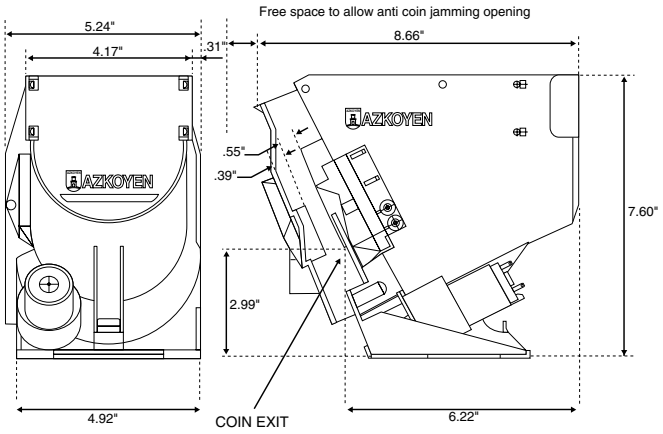

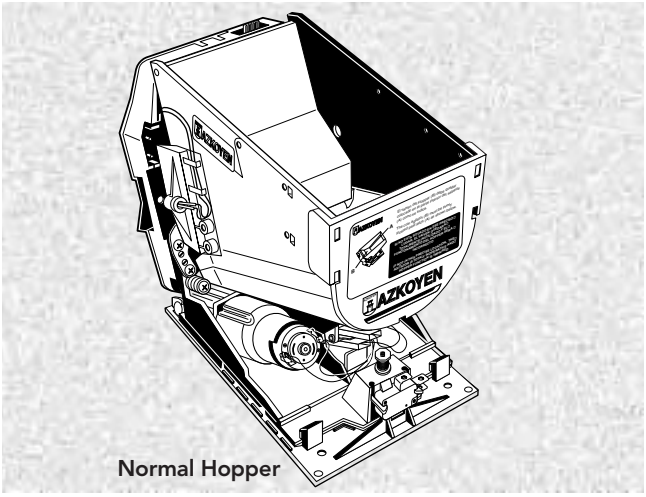
Normal Hopper

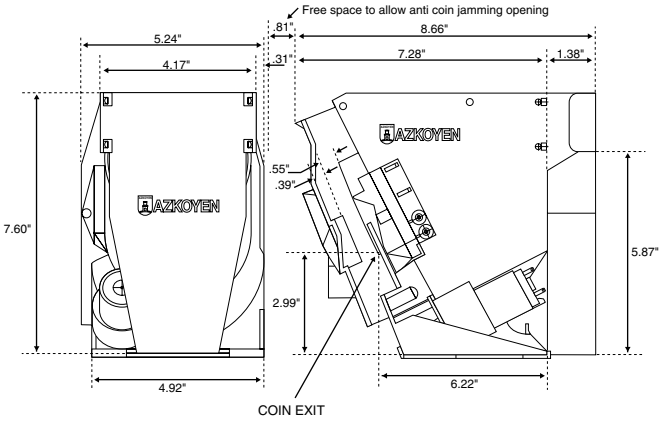

Natural Overflow Hopper

Part Number	Voltage	Hopper	Low Level Switch	High Level Switch	Price per ea.
41061451-0	24vdc	Normal	Yes	No	111.50
41061791-0	12vdc	Normal	Yes	No	111.50
41061801-0	12vdc	Natural Overflow	Yes	No	101.95
63000781-0	24vdc	Normal	Yes	Yes	128.55
41061101-0	24vdc	Natural Overflow	Yes	No	111.50
41061101-12	12vdc	Normal	Yes	Yes	111.50

Replacement Parts

Part Number	Description	Price per ea.
41050721-0	Gear motor	30.15
43307710-0	Control Board for Mini-Hopper with Opto Counter	17.65
41050741-0	Hopper Motor 24V, 20 RPM	29.55
43306840-2	Opto Sensor Board	24.10

HAPP CONTROLS ELECTRIC COIN SORTER, COUNTER, WRAPPER & BAGGER

The ultimate machine that sorts, counts, wraps or bags all coin or token denominations. It even handles the new Golden Dollar. Pour unsorted mixed coins into the large tray, set the controls and insert a bank wrapper in the wrapping tube. When you press the "start" button, it will count and wrap the coin with the largest diameter while at the same time sort away all other coins into a sort-bag or tray at the side. It automatically stops when each wrapper is filled with the proper number of coins. When you finish wrapping the largest coin, pour the coins from the sort-bag back into the tray, set the controls for the largest diameter coin remaining in the mix and repeat the counting and wrapping process. In just a few minutes all denominations will have been sorted, counted and wrapped. Will also count and bag coins instead of wrapping them. Just replace the wrapping tube with the bag tube at the front. The resettable electronic meter will tell you the number of coins that have been counted into the bag.

- Portable machine sorts, counts, wraps or bags coins and tokens of almost any size, even the new Golden Dollar coin
- Heavy duty metal coin tray and base
- Programmable stops via the electronic counter from 1 to 9,999 or infinity
- 5 digit resettable electronic counter
- Average speed counts between 1,200 coins per minute
- Reversible motor assists in clearing jams
- Includes $.05, $.10, & .25 coin tubes, $1.00 coin tube sold separately
- Comes with an additional rubber feed belt plus extra internal gears
- 110v AC
- Weight: 17.6 lbs.
- 90 day warranty

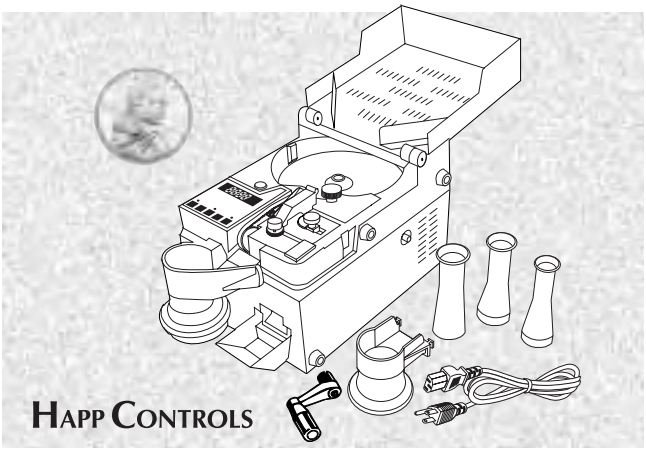

Part Number		Price per ea.
80-1050-10	Happ Controls Electric/Manual Coin Counter	991.15
80-1209-00	Coin Tube for $1.00 Coin	6.75

HAPP CONTROLS ELECTRIC / MANUAL COIN COUNTER

- Counts coins and tokens of almost any size, even the new Golden Dollar Coin
- Available with either plastic or metal tray and base
- Programmable stops at 20, 25, 40, 50, 100, 200 and infinity and automatically stops to allow emptying of wrapper tube
- 5 digit resettable counter
- Reversible motor assists in clearing jams
- Average speed counts between 1,200 - 1,500 coins per minute.
- Comes with an additional rubber feed roller plus extra internal gears
- Includes $.05, $.10, & .25 coin tubes
- 110v AC
- 90 day warranty

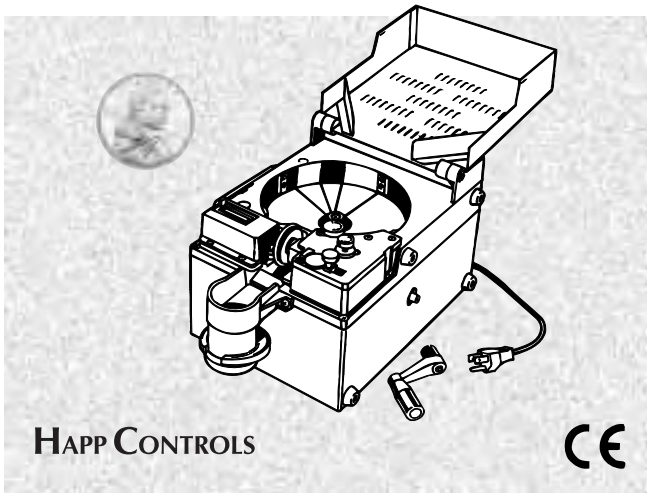

Part Number		Price per ea.
80-1050-00	Coin Counter with Metal Tray and Base	578.80
80-1050-PL	Coin Counter with Plastic Tray and Base	509.25
80-1209-00	Orange Coin Tube for Golden Dollar	6.75

SEE OUR NEW LINE OF COIN DEPOSIT BAGS ON PAGE 213

© HAPP CONTROLS

© HAPP CONTROLS

HAPP CONTROLS ELECTRIC/AUTOMATIC COIN COUNTER
EXPLODED VIEW
P/N 80-1050-00

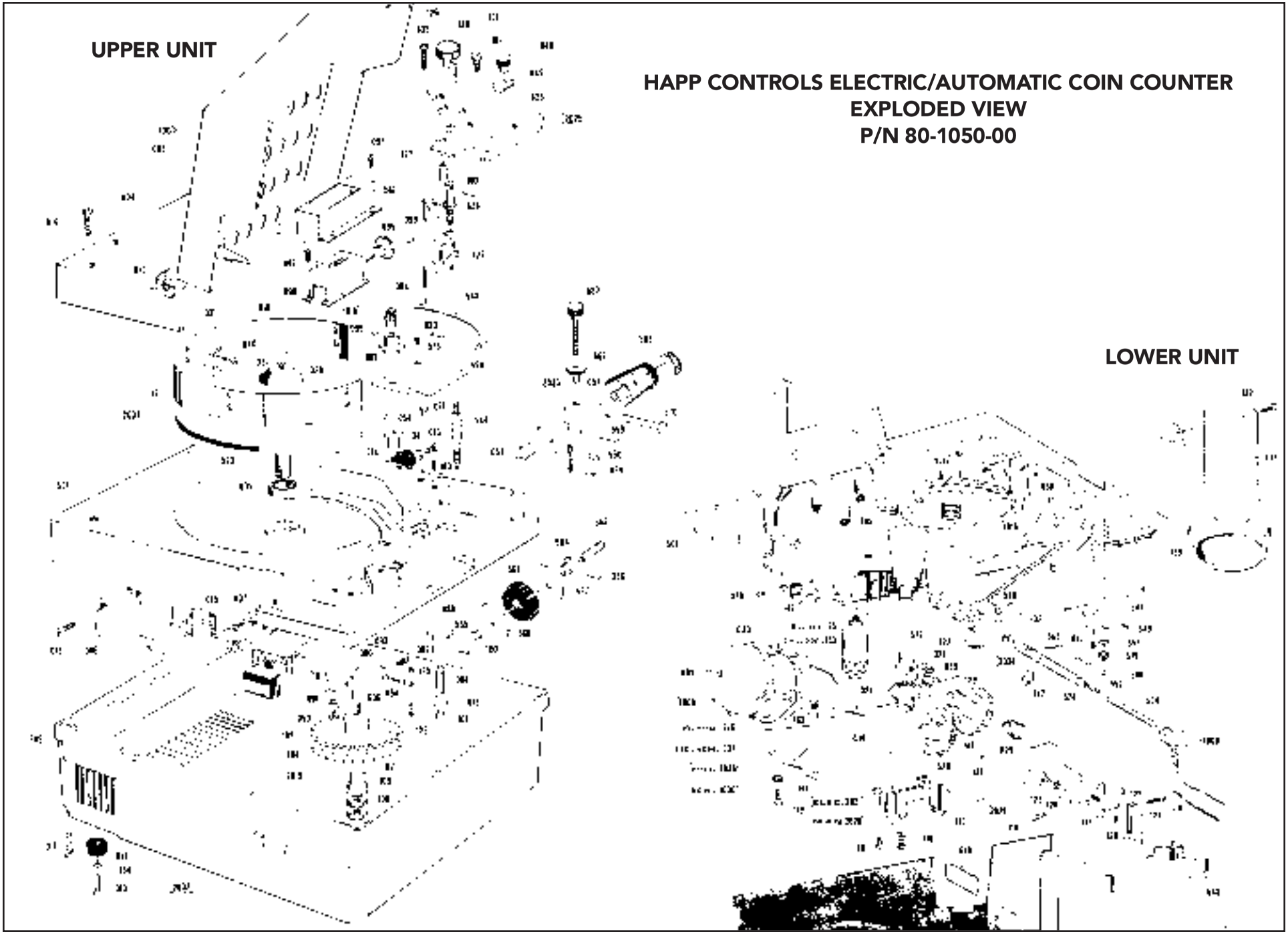

REPLACEMENT PARTS FOR HAPP CONTROLS COIN COUNTER

(SEE EXPLODED VIEW DIAGRAM FOR REFERENCE ON PAGE 207)

Ref. #	Part Number	Description	Price per ea.
-	80-1066-00	Blue Coin Tube $.05	7.10
-	80-1064-00	Gray Coin Tube $.01	7.25
-	80-1065-00	Green Coin Tube & $.10	7.10
-	80-1055-00	Orange Coin Tube $ .25	6.60
194	80-1209-00	Orange Coin Tube for Golden Dollar	6.75
004	80-1053-004	Cover	12.95
005	80-1101-00	Plate Tooth	10.05
006	80-1056-00	Handle	14.25
010	80-1069-010	Hinge	1.60
013	80-1059-013	Screw for Handle & Foot	.91
014	80-0057-014	Rubber Foot	1.90
021	80-1082-021	Pinion Gear	10.70
028	80-0046-028	Cone	2.85
029	80-1083-029	Rotation Bushing	4.50
031	80-1070-031	Bracket	2.15
033	80-1089-033	Roll pin	.71
039	80-1139-039	Shaft Pin	1.00
045	80-1056-045	Guide Bracket Slide Arm	6.60
046	80-1037-046	Knob	15.75
054	80-1063-054	Bushing	7.30
082	80-1089-082	Upper Star Wheel	7.75
084	80-1102-084	Gear for Star Wheel	10.95
088	80-1096-088	Star Wheel	8.30
090	80-0065-090	Lever	6.00
091	80-1098-091	Spacer Pivot for Lever	6.30
092	80-0065-092	Bushing	3.65
093	80-0065-093	Pin	3.65
094	80-0047-094	Spring	5.05
096	80-1058-096	Meter Old Style	113.40
113	80-1061-113	Count Stop Arm	14.25
116	80-0049-116	Adjustment Spring	5.20
117	80-1061-117	Spring for Count Stop A	2.85
120	80-0065-120	Nut	.84
123	80-0065-123	Screw	.84
126	80-1053-126	Housing	108.50
127	80-0059-127	Coin Guide	9.65
129	80-0048-129	Knob	10.95
132	80-1087-132	Screw	.91
137	80-1087-137	Coin Outlet w/ Ring	14.20
139	80-1087-139	Plastic Ring	13.35
147	80-0050-147	Plug Adapter	12.70
148	80-1039-00	Toggle Switch	21.95
149	80-1038-149	Power Cord	69.45
161	80-0052-161	Screw	1.60
175	80-1097-175	Condenser	49.70
176	80-1092-176	Motor	129.95
505	80-1100-505	Plate	7.15
509	80-1106-509	Plate	5.10
519	80-1085-519	Feed Shaft	10.70
520	80-1084-520	Reducer Gear	10.70
522	80-1080-522	Gear	11.60
532	80-1054-532	Drive Belt	10.65
541	80-0051-541	Mounting Plate	13.35
543	80-0052-543	Guide Arm	5.55
547	80-0053-547	Protective Cover for Gears	3.15
548	80-0053-548	Spring	4.90
550	80-1090-550	Plate	13.45
552	80-1137-00	Spring	3.65
555	80-1078-555	Nut	.89
563	80-1073-563	Shaft	14.25
564	80-1074-564	Bushing	12.80
565	80-1138-565	Pin	2.15
567	80-1075-567	Large Washer	7.15
568	80-1077-568	Rubber Wheel Washer	7.15
569	80-1076-569	Rubber Feed Wheel	4.85
572	80-1081-572	Bushing	5.40
575	80-0052-575	Spring	9.25
587	80-1056-587	Meter Cover	14.25
625	80-0054-625	Housing Cover	75.65
628	80-0055-628	Shaft	6.45
667	80-0056-667	Adjusting Lock Nut	5.85
682	80-1051-682	Adjusting Screw	10.05
1003	80-1069-00	Cover	93.05
1006	80-1099-1006	Crank Handle	10.65
1016	80-1095-1016	Shaft for Star Wheel	29.05
1017	80-1086-1017	Arm Entering for Star Wheel	25.55
1018	80-1057-1018	Meter	57.85
1028	80-1083-1028	Lever	138.10
1035	80-1071-00	Gear Box	94.75
2019	80-1086-2019	Gear	16.60
2025	80-1053-2025	Complete Adjustment Assy	118.45
2003	80-1053-2003	Cover With Hinge	23.40

HAPP CONTROLS LOCK DEPARTMENT

Happ Controls now has it's own lock assembly department. We offer fast turn around on 7-pin tumbler locks. Most custom lock orders can be shipped within 48 hours. Happ locks can be keyed to your existing 7-pin tumbler key, if we receive a sample key with your order. Our 7-pin tumbler locks offer high security at a reasonable price. For your added protection, any code issued by Happ Controls can be restricted in our computer system exclusively to your company.

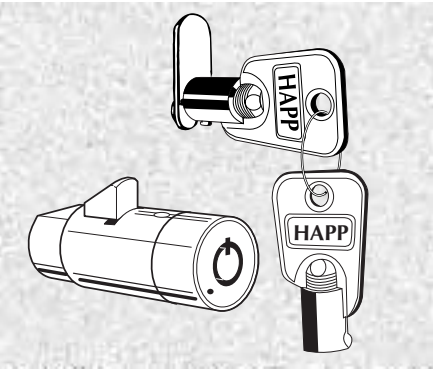

© HAPP CONTROLS

KLOPP COIN COUNTERS / WRAPPERS AND SORTERS

Since 1931, Klopp has been a U. S. manufacturer of high quality, economically priced coin handling equipment. Their superb reputation for accuracy, rugged dependability and almost no breakdowns has been justifiably earned through the test of time. Their products are made in the USA.of cast aluminum and hardened steel. This means long life and minimal service. Klopp products are covered by a one year factory warranty on both parts and labor.

Here's how Klopp Coin Counter / Wrappers and Sorters benefit you:

- Eliminate 70% of the time now being spent to count and wrap coins by hand or with a plastic slide.
- Cut labor costs of coin processing by providing fast and accurate counts the first time.
- Eliminate human error caused by interruptions since the Klopp does the counting, not the operator.
- Speed bank deposit preparation.

KLOPP MODEL ET ELECTRIC SORTER / COUNTER / WRAPPER / BAGGER

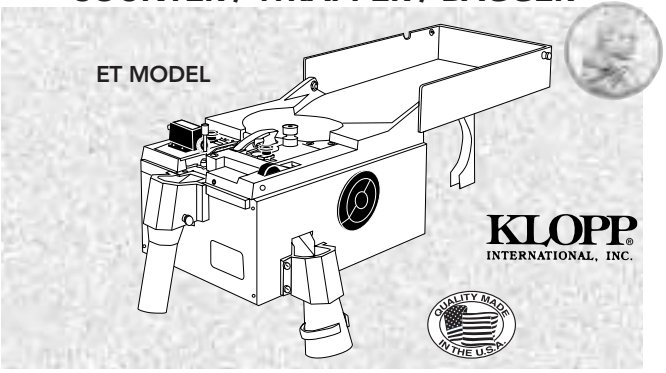

The "Everything Machine" sorts, counts, wraps or bags all coin or token denominations. Pour unsorted mixed coins into the large tray, set the controls and insert a bank wrapper in the wrapping tube. When you turn the unit on, it will count and wrap the coin with the largest diameter while at the same time sort away all other coins into a sort-bag at the side. The ET automatically stops when each wrapper is filled with the proper number of coins. When you finish wrapping the largest coin, pour the coins from the sort-bag back into the tray, set the controls for the largest diameter coin remaining in the mix and repeat the counting and wrapping process. In just a few minutes all denominations will have been sorted, counted and wrapped. The ET will also count and bag coins instead of wrapping them. Just replace the wrapping tube with an optional bag tube at the front. The resettable meter will tell you the number of coins that have been counted into the bag. The Model ET is preferred by those with a large volume of mixed coins. It includes 4 wrapping tubes and a side bag tube.

SPECIFICATIONS:

- Construction - cast aluminum and hardened steel
- Finish - polished aluminum and textured gray enamel
- Coin Stops - 20, 25, 40, 50 coins/tokens for wrapping, plus "C" for continuous flow into a bag
- Meter - five (5) digit resettable
- Wrapping Tubes - Color Coded; in U. S. $.25, $.10, $.05, $.01; in Canada $.25, $.10, $.05
- Processes 1,800 coins per minute and can fill a bank wrapper in 4 seconds. Coin tray holds approximately 6,000 coins.
- Dimensions - 10" W x 12" H x 17" D closed, (31" D open)
- Weight - 35 lbs., shipping weight 43 lbs.
- Motor - 1/15 hp, 115 volt, 60 cycle
- Denominations - Sorts, counts, wraps or bags all U. S. and Canadian coins and tokens of similar size. Also, non-U. S. coins and tokens up thru 32 mm in diameter and 2 mm in thickness on request.

Part Number		Price per ea.
80-0208-00	Model ET Electric Sorter/ Counter/Wrapper/Bagger	2,575.95
80-1171-00	Wrapping Tube for Golden Dollar	35.60
80-1113-00	Bag Tube and Ring Assembly	87.25

KLOPP COIN COUNTER / WRAPPER / BAGGER

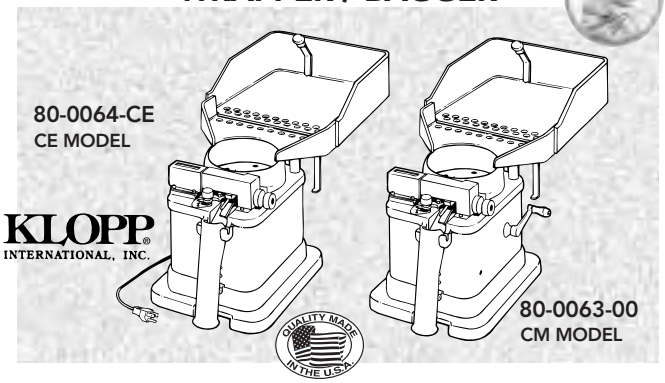

Counts, wraps or bags dollars, quarters, nickels, dimes, pennies and tokens one denomination at a time. Pour a large quantity of the same denomination of coins into the tray. Set the controls and insert a bank wrapper in the wrapping tube at the front of the unit. Turn the switch on or turn the crank handle and in four seconds the wrapper is filled with the proper number of coins and the unit automatically stops. Repeat this process until all coins are counted and wrapped. This unit will also count and bag coins instead of wrapping them. Just replace the wrapping tube with an optional bag tube at the front. The resettable meter will tell you the number of coins that have been counted into the bag.

SPECIFICATIONS:

- Construction - cast aluminum and hardened steel
- Finish - polished aluminum and textured gray enamel
- Coin Stops - 20, 25, 40, 50 coins/tokens for wrapping, plus "C" for continuous flow into a bag
- Meter - five (5) digit resettable
- Wrapping Tubes - Color Coded; in U. S. $.25, $.10, $.05, $.01; in Canada $.25, $.10, $.05
- Processes 1,800 coins per minute and can fill a bank wrapper in 4 seconds. Coin tray holds approximately 3,000 coins.
- Dimensions -
  Electric Model CE 10" W x 12" H x 15" D, (20" D open)
  Manual Model CM 10" W x 12" H x 10" D, (20" D open)
- Weight -
  Electric 22 lbs., shipping weight 27 lbs.
  Manual 14 lbs., shipping weight 19 lbs.
- Motor - Electric unit only 1/40 hp, 115 volt, 60 cycle
- Denominations - Counts, wraps or bags U. S. $1 $.25, $.10, $.05, $.01 plus .800, .882, .900, .984 tokens; In Canada, $.25, $.10, $.05, $.01. Also, U. S. and other coins and tokens up thru 26 mm in diameter and 2 mm in thickness on request.
- Electric Model Number - CE
- Manual Model Number - CM

Part Number		Price per ea.
80-0064-CE	Klopp Electric Coin Counter/Wrapper/Bagger	1,245.95
80-0063-00	Klopp Manual Coin Counter/Wrapper/Bagger	1,105.95
80-1202-100	Plastic Wrapping Tube for U.S. or Canadian $1.00	54.30
27-1319-00	Bagging Tube for Golden Dollar	63.35

KLOPP INTERNATIONAL, INC.

THE KLOPP KONVERTIBLE ELECTRIC AND MANUAL COIN COUNTER

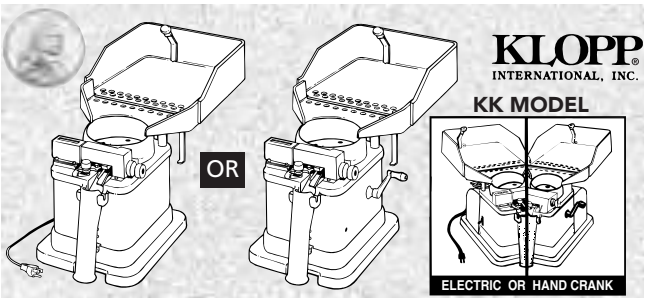

This portable coin counter wrapper-bagger can be operated electrically or manually. It's easy to convert to manual operation if electric power is not available - simply remove the hand crank from its storage location, insert it in the side of the counter housing and your ready to count. The hand crank is super easy to turn because Klopp's exclusive Pfraylea Bearing design eliminates all motor belt drag when operating manually. Klopp's positive lock-out system prevents electric coin counting operation while the hand crank is inserted into the counter. The Klopp Konvertible counts, wraps or bags $1.00, $.25, $.10, $.05, $.01 coins plus numerous tokens and non-U. S. coins, one denomination at a time. The Model KK does not sort mixed coins.

Part Number		Price per ea.
80-0309-00	The Klopp Konvertible Electric And Manual Coin Counter	1,383.40
80-1202-100	Wrapping Tube for U.S. or Canadian $1.00	54.30
27-1319-00	Wrapping Tube for Golden Dollar	63.35

SPECIFICATIONS:

- Construction - Cast aluminum and hardened steel
- Portable - Model KK has a large hinged coin tray that folds to protect the controls from dirt or damage when not in use.
- Denominations - Counts, wraps or bags U. S. or Canada Dollar, $.25, $.10, $.05, $.01 plus .800, .882, .900, .984 and 1" tokens. Models to count the 1-1/8" token or coin/token sizes up through 26mm in diameter and 2mm in thickness are optional on request. Klopp equipment does not reject slugs or differentiate between coins/tokens of the same diameter.
- Coin Stops - 20, 25, 40, 50 coins/tokens for wrapping, plus "C" for continuous flow into a bag
- Meter - five (5) digit resettable
- Wrapping Tubes - Color Coded; in U. S. $.25, $.10, $.05; in Canada $.25, $.10, $.05
- Processes - bags 1,800 coins per minute and can fill a bank wrapper in 4 seconds. Coin tray holds approximately 3,000 coins.
- Finish - Polished aluminum and textured gray enamel
- Dimensions - 10" W x 12" H x 15" D closed , (20" D open)
- Weight - 22 lbs., shipping weight 27 lbs.
- Motor - 1/40 hp, 115 volt, 60 cycle
- Factory Warranty - One year on parts and labor at factory

KLOPP MODEL SE ELECTRIC COIN SORTER

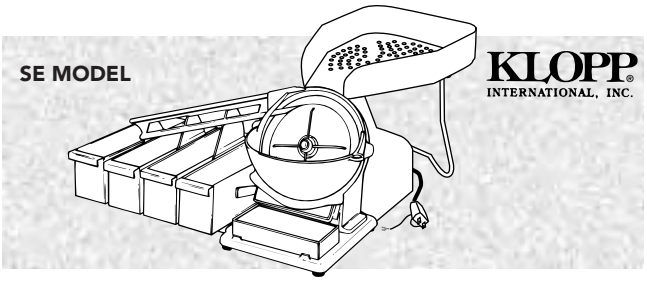

Sorts quarters, nickels, dimes and pennies, one denomination from the other (tokens optional). Pour a large quantity of mixed coins into the tray. Turn the unit on and feed mixed coins from the tray into the hopper. They will be rapidly separated into the individual removable coin boxes. Debris, mutilated and oversize coins remaining in the hopper can be easily flushed out by depressing the Clean-Out Arm. This unit does not count coins it simply sorts them.

SPECIFICATIONS:

- Construction - cast aluminum and hardened steel
- Finish - polished aluminum and textured gray enamel
- Processes 1,000 coins per minute
- Dimensions - 22" W x 14" H x 19" D
- Weight - 33 lbs., shipping weight 38 lbs.
- Denominations - Sorts U. S. or Canadian $.25, $.10, $.05, $.01. Dollar coin and other coins and tokens up through 26mm in diameter and 2mm in thickness on request.

Part Number		Price per ea.
80-0081-00	Klopp Model SE Electric Coin Sorter	1,403.50

KLOPP MODEL SM MANUAL COIN SORTER

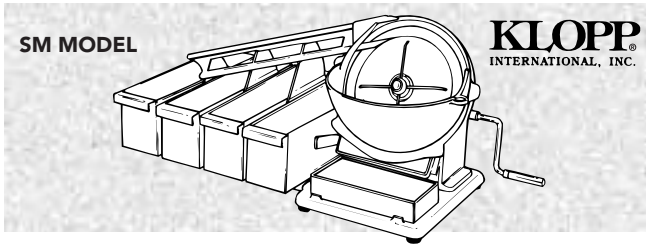

This unit has the same basic features as the Klopp Model SE Electric Sorter (Happ P/N. 80-0081-00) but it is operated with an easy-to-turn balanced crank. Since it is not equipped with a tray, mixed coins can be poured directly into the hopper. This manual coin sorter is ideal when a limited budget is a consideration. This unit does not count coins it simply sorts them

SPECIFICATIONS:

- Construction - cast aluminum and hardened steel
- Finish - polished aluminum and textured gray enamel
- Processes 1,000 coins per minute
- Dimensions - 22" W x 11" H x 10" D
- Weight - 19 lbs., shipping weight 22 lbs.
- Denominations - Sorts U. S. or Canadian $.25, $.10, $.05, $.01. Dollar coin and other coins and tokens up through 26mm in diameter and 2mm in thickness on request.

Part Number		Price per ea.
80-0202-00	Klopp Model SM Manual Coin Sorter	1,083.95

© HAPP CONTROLS

REPLACEMENT PARTS FOR KLOPP COIN COUNTERS

Part Number	Klopp Ref.	Description	Price per ea.
80-0226-00	1209014	Coin Guage Shaft	31.75
42-3169-00	2-010	Drive Star	20.45
80-0261-00	3-111120	Standard Frame, Manual	7.30
80-0255-00	3-1150	D-1150 Knife	21.75
80-0246-00	3-1210	Bracket Disc	41.85
80-0248-00	3-1349	Pinion Gear - Disc Shaft	19.10
80-0063-3-1360	3-1360	Rubber Inserts for Top of Count	1.55
80-0249-00	3-2110	Drive Wheel-Manual	46.80
80-0263-00	3-9010	Meter Only, as of 7/88	113.95
42-7205-00	3-9020	Knob for Coin Meter	6.30
80-0224-00	3-925110	Leg Shoulder Screw	7.65
80-0272-00	3-92550	Rubber Tip	6.15
27-1199-00	3-92590	Tray Locking Leg	17.95
80-0260-00	3-940	Bevel Gear-Drive Star Shaft	30.50
80-0256-00	4-390	Drive Belt - Motor	34.20
80-0240-00	482213	Motor, Long Shaft	310.00
80-0265-00	7-20	Trip Hinge	8.30
80-0227-00	76762	Drive Wheel, Manual	43.05
80-0249-00	76793	Drive Wheel, DE-211	46.80
80-0270-00	91-320	Bevel Gear Assembly	87.30
80-0252-00	93-50	Coin Gauge Assembly	246.50
80-0266-00	93-130	Disc Assembly-$/1"	246.50
80-0063-93-2210	93-2210	Lower Discharge Wheel	72.40
80-0254-00	93-40	Hopper/Horn & Shield Assembly	126.55
80-0268-00	93-420	Shield Assembly	31.65
80-1202-05	94-975	Nylon Wrapping Tube $.05	41.40

Part Number	Klopp Ref.	Description	Price per ea.
80-0250-00	3-22250	Shaft-Discharge Wheel	7.55
80-0243-00	3-320	Rubber Base Feet	4.45
80-0242-00	3-550	Pawl Spring	12.50
80-0247-00	3-560	Spring-Coin Guide Finger	8.55
42-3170-00	3-570	Coin Guide Finger	10.95
80-0257-00	3-620	Screw - Hopper Shoulder	6.85
80-0259-00	3-630	Plate - Hopper Shoulder Screw	8.85
80-0258-00	3-640	Spring - Hopper Shoulder Screw	4.40
42-7206-00	3-740	Tube Clip	9.60
42-0262-00	3-810	Crank Collar	13.10
80-0228-00	93-530	Worm Assembly	59.45
80-0063-93-580	93-580	Upper Discharge Wheel	24.60
80-0251-00	93-6170	Guide Rail Assembly	31.70
80-0063-93-830	93-830	Crank Assembly	53.85
93-900	93-900	Meter Assembly, pre 7/88	156.00
80-1202-984	93-9129	Metal Wrapping Tube, .984 Token	54.30
80-0267-00	94-2120	Small Gear Assembly	29.20
80-1202-100	94-970	Nylon Wrapping Tube, $1 US/Canadian	54.30
80-1202-01	94-971	Plastic Wrapping Tube $0.01Penny	42.25
80-1202-10	94-9710	Plastic Wrapping Tube $0.10 Dime	42.25
80-1202-1	94-97100	Nylon Wrapping Tube, 1" Token	54.30
80-1202-25	94-9725	$0.05 Nickel $0.25 Quarter	42.25
80-1202-1125	94-9718	Nylon Wrapping Tube, $2 Canadian	54.30
80-1202-05	94-975	Nylon Wrapping Tube,	42.25
80-1202-882	94-97882	Nylon Wrapping Tube .882 Token	54.30
80-1202-900	94-97900	Nylon Wrapping Tube .900 Token	54.30
80-0063-99-101	99-101	Crank Handle	41.60

CURRENCY BANDS

- Great for locations that count large amounts of dollars
- Pressure sensitive adhesive
- Minimum order 1,000
- 20,000 per case

Part Number		Per 1K	Case
27-1021-00	Currency Bands – $50 Imprint	4.60	4.05
27-1022-00	Currency Bands – $100 Imprint	4.60	4.05
27-1023-00	Currency Bands – $500 Imprint	4.40	3.85

COIN WRAPPERS

- Top quality weather proof paper
- Tubular wrapper open with ease
- For that extra touch, imprint your name on the wrappers. No question whose money it is.
- Minimum order one box of 1,000

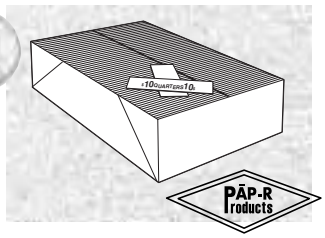

Part Number	Coin	Capacity	Case Qty	Per 1K	Case	L/5 Case
27-1155-00	1¢	$ .50	20k	4.05	3.95	—
27-1231-00	5¢	$1.00	30k	4.05	3.95	—
27-1046-00	5¢	$2.00	20k	4.05	3.95	—
27-1045-00	10¢	$5.00	20k	4.05	3.95	—
27-1230-00	25¢	$5.00	24k	4.05	3.95	—
27-1020-00	25¢	$10.00	16k	3.85	3.75	3.55
27-1019-XXXX	25¢	$10.00	16k	—	4.90	4.70
Imprinted						
27-1229-00	50¢	$10.00	12k	4.05	3.95	—
27-1351-00	$1.00	$25.00	20k	4.65	4.45	—

COIN STACKER TUBE

- Heavy duty, color-coded coin tubes counts and wraps coins in a hurry
- Hand held
- Simply add coins to fill line
- 5¢, 10¢ and 25¢ stackers sold separately

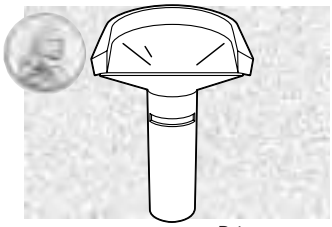

Part Number		Color	Price per ea.	L/10
27-1043-05	Coin Stacker Tube – 5¢	Blue	2.00	1.85
27-1043-10	Coin Stacker Tube – 10¢	Green	2.00	1.85
27-1043-25	Coin Stacker Tube – 25¢	Orange	2.00	1.85
27-1043-100	Coin Stacker Tube – $1.00	Gray	2.00	1.85

BRASS TOKENS

- Use tokens to free up cash
- Reduce theft
- Material: golden brass
- Available in four popular sizes
- Minimum order 100 pieces

Part Number	Size	Price per ea.	L/500	L/1,000
42-8011-00	.800 x .075	.20	.20	.19
42-0731-00	.882 x .070	.17	.17	.16
42-0700-00	.900 x .070	.17	.17	.16
42-0701-00	.984 x .060	.17	.17	.16
42-0701-01	1.00 x .060	.17	.17	.16

CASHSCAN MSB-30 BANK NOTE COUNTER

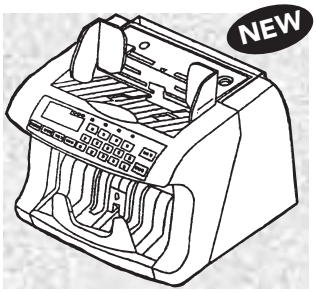

- Variable speed preset and variable batch dual display
- Super light weight
- Three counting speeds
- Built-in self-diagnosis
- Note thickness adjustment
- Auto Density adjustment
- Dual display
- Error display
- Selection of preset or variable counting
- Counting speed: 1,500/1,200/900 notes per minute
- Available with magnetic counterfeit detection
- Hopper capacity: 300 notes
- Stacker capacity: 200 notes
- Note size range: 500mm x 100mm to 100mm x 190mm
- Dimensions: 10.23" W x 9.25" H x 8.74" D
- Weight: 10.47 lbs.

Part Number		Price per ea.
80-1112-10	Cashscan MSB-30 w/o Counterfeit Detect.	795.00
80-1112-20	Cashscan MSB-30 w/ Counterfeit Detect	665.00

MAG II SCS 100 PORTABLE COIN SORTER

- Counts five U.S. coin denominations (.01, .05, .10, .25,$1)
- Needs no AC power, the display and keyboard are powered by six AA batteries
- Automatic power-off feature
- Up to 25 hours of continuous operation on one set of batteries
- Displays the total value and quantity of coins processed
- Also displays the individual value for each coin denomination processed, and the number of coins for each denomination processed
- Integrated coin drawers
- Manual coin feed handle easily folds for storage
- At under six pounds, the SCS 100 is extremely compact and fully portable
- Dimensions: 10" D x 9.5" W x 6.5" H
- Weight: 5.46 lbs

Part Number		Price per ea.
80-1126-100	Mag II SCS 100 Portable Coin Sorter	708.75

MAG II CURRENCY COUNTER

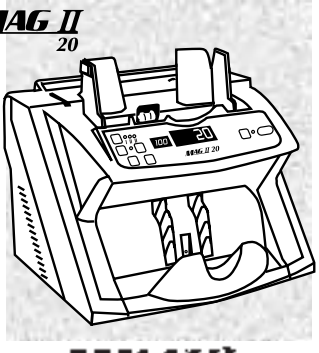

- Outstanding performance at an affordable price
- Compact, durable and easily portable
- Counts up to 1,200 notes per minute
- Variable batch counting
- Automatic start
- Hopper capacity 300 notes, stacker capacity 200 notes
- Dimensions 11"W x 9.45"D x 7.68"H
- Weight 12.4 lbs.

Part Number		Price per ea.
80-1207-00	Magner Currency Counter - Model 20	640.15

MAG II COIN SORTER

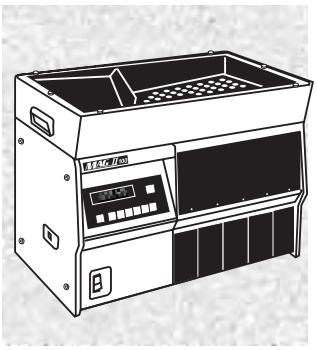

- Sorts, counts and accumulates 5 U.S. coins ($.01, $.05, $.10, $.25,and $1.00 SBA)
- Great for low to medium volume jobs
- Processing speed up to 600 coins per minute
- Large inspection tray and hopper capacity
- Large 6 digit LED display
- Automatic motor shut-off
- Counting method: optical sensors
- Sorting method: gravity rail
- Memory: Total value plus individual denomination totals for sub and grand totals
- Dimensions: 19.5"W x 11.25"D x 14.25"H
- Power: 120VAC 60Hz
- Net weight: 46 lbs.

Part Number	Description	Price per ea.
80-1126-00	MAG II Coin Sorter	2,137.85

Accessories	Description	Price per ea.
80-1136-00	Bagging Attachment	72.35
80-1134-00	Locking Security Stand	536.05
80-1135-00	Machine Stand	480.60
80-1132-00	Shelf	48.15
80-1133-00	Casters (set of 4)	24.10

COLLECTION REPORT BOOK

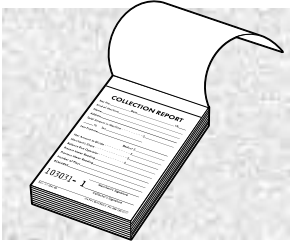

- Designed for all coin-operated machines
- 3-3/8" x 5"
- 3 sheets per set
- 50 sets per book
- Each set in numerical order
- 100 books per case

Part Number		Price per ea.	L/100
27-1041-00	Collection Report Book	1.90	1.80

COIN BAG ENVIRO SEALS

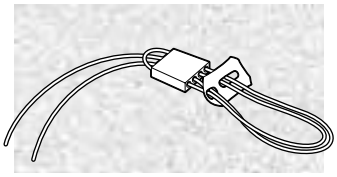

- Seals money bag to prevent tampering with your money
- Applied with any standard sealing tool
- Minimum order 50
- 250 per case
- Gray serrated cap secures the neck of the bag
- Environmentally safe – replaces lead seals

Part Number		Price per ea.
27-1057-00	Coin Bag Enviro Seals	.30

Visit Our Web Site:
happcontrols.com
for NEW Product Updates!!

BANK DEPOSIT BAGS

- Plastic bags primarily used for cash and checks
- Tamper evident adhesive closure
- Sequentially numbered with tear off receipt for easy tracking
- Two color imprint to record content information
- Strong 3 mil clear film
- Available in 2 sizes: 9" X 12" or 12" X 15.5"
- Packed 500 per case
- Sold by the case only

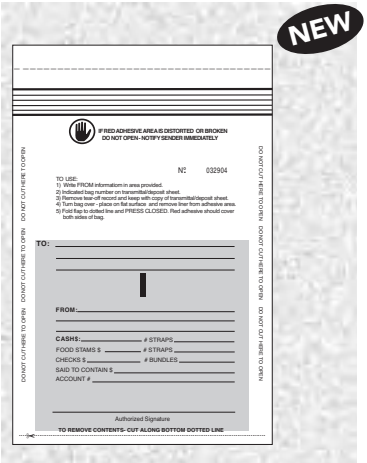

Part Number		Price per case
27-0074-00	9"x12" Bank Deposit Bag	112.20
27-0075-00	12"x15.5" Bank Deposit Bag	160.15

COIN HOPPER FILL BAGS

- Super tough plastic bag for loose coins
- Tamper evident adhesive closure
- Dual sequential numbering with tear off receipt for easy tracking
- Two color stock imprint to record content information
- Made with non-slip film to prevent slipping when stacked
- Available in 2 sizes: 9" X 14" or 8" X 17"
- Film: .005 clear linear material
- Packed 500 per case
- Sold by the case only

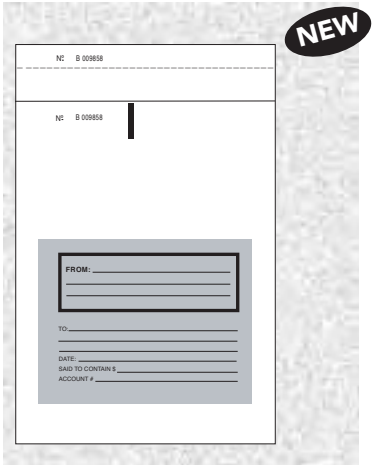

Part Number		Price per case
27-0076-00	9"x14" Hopper Fill Bag	107.05
27-0077-00	8"x17" Hopper Fill Bag	101.95

PLASTIC COIN DEPOSIT BAG

- Plastic bag for loose coin bank deposits
- Super tough 6.5 mils clear film
- Tamper evident adhesive closure
- Dual sequential numbering with barcode tear off receipt for easy tracking
- Two color stock imprint to record content information (a Federal Reserve requirement)
- Easy to use directions with illustrations
- Handy die-cut handle for easy transport
- Capacity: $1,000 in quarters, $1,000 in dimes, $200 in nickels, $50 in pennies, $2,000 in dollars or $1,000 in half dollars
- Made with non-slip film to prevent slipping when stacked
- Available in 2 sizes: 10" X 15" or 12" X 20"
- Sold by the case only, packed 100 per case
- Federal Reserve requirements vary by location; verify this bag meets requirements in your area

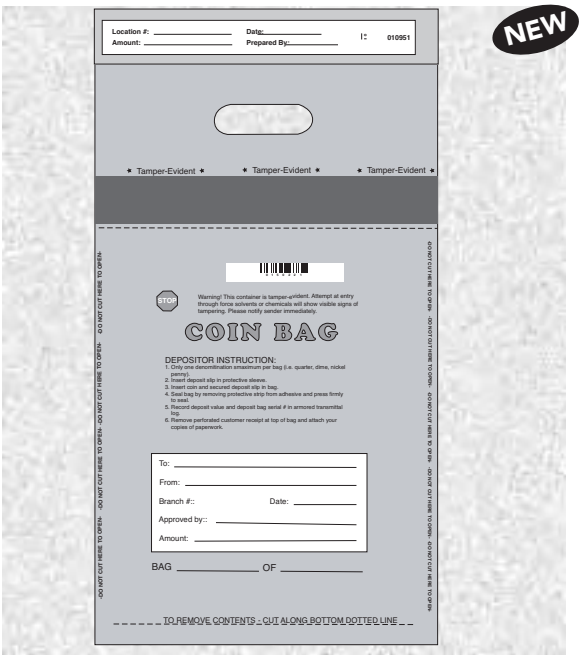

Part Number		Price per case
27-0113-00	10"x 15" Plastic Coin Deposit Bag	30.55
27-0112-00	12"x 20" Plastic Coin Deposit Bag	54.05

CURRENCY WALLETS

- Five pockets for different currency denominations
- 1" wide belt loops on back
- Heavy-duty 3/4" grommet for chain
- Oversize flap closes securely with hook and loop system
- Choose from two types of material

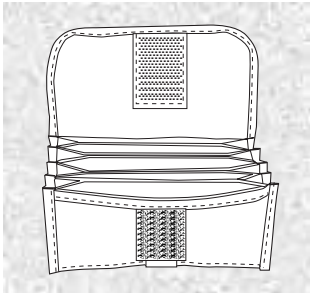

Part Number		Price per ea.
95-1148-00	Black Neoprene Coated Nylon	30.15
95-1149-00	Black Imperial Nylon	30.15

COLLECTION MONEY BAG

- Convenient 11"x 8" size
- 10 oz. Army Duck material double stitched
- Color: Red
- High quality brass zipper on long side of bag

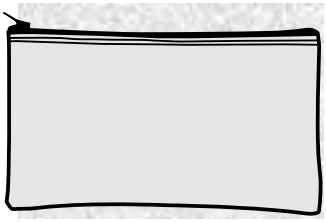

Part Number		Price per ea.	L/12
49-0648-00	Collection Money Bag	5.45	5.05

RECTANGULAR FANNY PACK

NEW

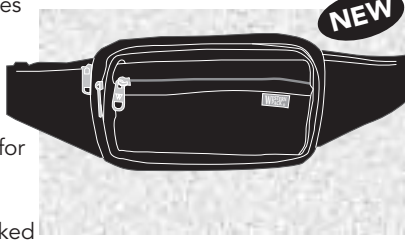

- Rectangular shape makes it great for currency
- Four large zippered pockets plus two small zippered side pockets
- Side pockets are great for coins
- Durable 900 denier polyester with PVC backed water resistant fabric
- Belt adjusts up to 55" waist
- Size: 9" x 5.25" x 1.25"
- 5-year manufacturer limited warranty
- Color: Black

Part Number		Price per ea.
95-2096-10	Rectangular Fanny Pack	20.35

NYLON POUCH WALLET

NEW

- Great for handling money or for service technicians
- Ideal for casino jackpot slips, money, rolls of coins, small tools, etc.
- Constructed of heavy-duty black imperial nylon
- Two extra large 4" belt loops on back for high security
- Five interior pockets for separation of items
- "Quick Close" with hook and loop system
- High security closure with full zipper
- Size: 8" wide x 4" high; depth 2.5" to 3.5"

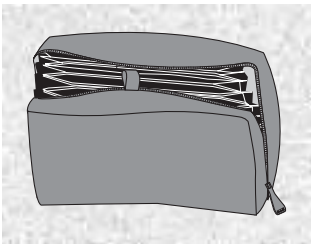

Part Number		Price per ea.
80-1186-00	Nylon Pouch Wallet	36.95

DO YOU WANT TO KNOW EACH TIME YOUR ORDER SHIPS OUT?

e-mail notification and order **tracking information** is now available from Happ Controls! Contact your sales representative or e-mail our customer service department at: **info@happcontrols.com** with your account information.

VALIDATOR LABEL SETS

- Bright yellow label with black printing
- Laminated for durability and longevity
- Arrows attract attention to where money is to be inserted into validator
- Interior labels used to identify bill denominations accepted
- For use on either Stackerless, Upstacker, or Downstacker applications as noted

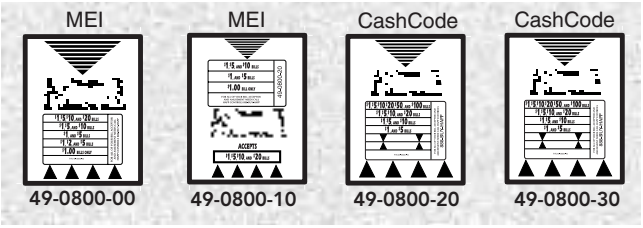

Part Number		Price per ea.	L/100
49-0800-00	Validator Label Set for MEI Series 2000 (Upstacker & Downstacker)	1.85	1.40
49-0800-10	Validator Label Set for MEI AL, GL and LE Series (Stackerless, Upstacker & Downstacker)	1.85	1.40
49-0800-20	Validator Label Set for CashCode Stackerless	1.85	1.40
49-0800-30	Validator Label Set for CashCode "UNV" Universal Stacker (Upstacker & Downstacker)	1.85	1.40

VALIDATOR LABEL SET

- Attaches to top of bill entry chute on validator – makes it easy to see
- Black print on bright yellow background
- Adhesive backed
- Size: 2.75" x .75"
- Complete set of all labels shown at right

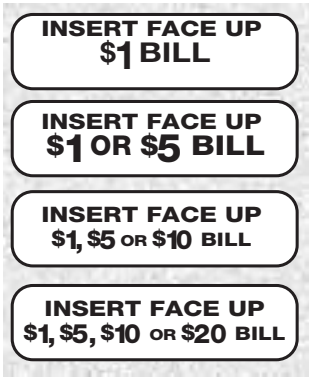

Part Number		Price per ea.	L/25
42-0548-00	Validator Label Set	2.50	2.15

COIN DOOR LABELS

- Complete set of all labels shown
- Adhesive backed
- Black print on gold metallic background
- Size: 1" x 3"

Part Number		Price per ea.	L/25
42-0305-00	Coin Door Label Sets	2.50	2.35

© HAPP CONTROLS

TICKET DISPENSER LABEL SET

- Great way to attract attention to ticket dispensing machines
- Simply peel off and stick on
- Black printing on bright yellow background
- Durable polystyrene material adhesive backed
- Size: 5.5" x 4"
- Complete set of 3 decals: "Tickets", "Tickets with Arrow", and "For Amusement Only"

Part Number		Price per ea.	L/25
42-1378-00	Ticket Dispenser Label Set	2.10	1.90

BILL VALIDATOR LABEL

- Accepts $1 and $5 Bills
- Use on Rainbow crane games and others
- White print on clear mylar label with adhesive backing
- Size: 3-1/4" x 4-1/4"

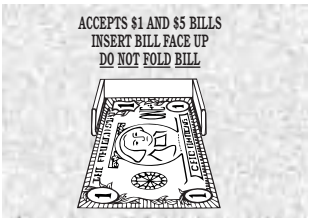

Part Number		Price per ea.
42-7191-00	Bill Validator Label	3.15

"AMUSEMENT ONLY" WARNING LABEL

- Black text on bright yellow
- Laminated coating for easy cleaning
- Size: 2" x 7-1/2"

Part Number		Price per ea.	L/100
49-0662-00	"Must be 18 Years Old" Label	.91	.79
49-0665-00	"Must be 21 Years Old" Label	.91	.79

"OUT OF ORDER" LABEL

- Black on orange
- Size: 1-1/2" x 2"
- Special adhesive for easy removal after service is completed

Part Number		Price per ea.	L/100
42-7017-00	"Out of Order" Label	.30	.25

"FOR SERVICE CALL" LABEL

- Your name and address in up to 4 lines of copy
- To order specify copy as you wish it to appear
- Pressure sensitive adhesive backing
- Color: black on silver
- Size: 2" x 3"
- Minimum order: 250

Part Number		Price per ea.	L/250
49-0643-XXX	"For Service Call" Personalized Labels	1.90	

"TOKEN ONLY" LABEL

- Pressure sensitive adhesive
- Black on bright red
- Size: 4" x 1-1/4"

Part Number		Price per ea.	L/100
42-7018-00	"Token Only" Label	.30	.25

"NO REFUND" LABEL

- Bright red on white background
- Size: 3" x 4-5/8"

Part Number		Price per ea.	L/50
49-0656-00	"No Refund" Label	.79	.66

"WARNING" LABEL

- Pressure sensitive label
- Color: Black on Silver
- Size: 2-1/2" x 4-3/4"

Part Number		Price per ea.	L/100
42-7016-00	"Warning" Label	.71	.66

CIGARETTE WARNING LABEL

- Warning label for new government smoking regulation
- Adhesive backed label
- Size: 2-1/2" x 4-1/2" laminated
- Color: Black text on yellow label

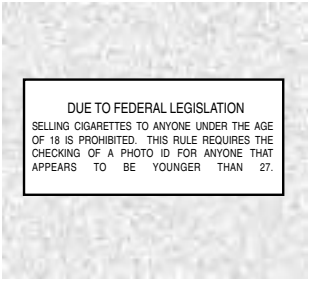

Part Number		Price per ea.	L/100
27-1110-00	Cigarette Warning Label	.91	.61

PRICE LABELS

- Black print on silver foil
- Size: 3" x 1-5/8"
- Pressure sensitive adhesive

Part Number		Price per ea.	L/100
49-0667-01	$2.75 Price Label	.45	.36
49-0667-02	$3.00 Price Label	.45	.36
49-0667-03	$3.25 Price Label	.45	.36
49-0667-04	$3.50 Price Label	.45	.36
49-0667-05	$3.75 Price Label	.45	.36
49-0667-06	$4.00 Price Label	.45	.36
49-0667-07	$4.25 Price Label	.45	.36
49-0667-08	$4.50 Price Label	.45	.36
49-0667-09	$4.75 Price Label	.45	.36
49-0667-10	$5.00 Price Label	.45	.36

PAY PER PLAY LABELS

- Ideal for video games, pool tables or any other coin-operated application
- Size: 1-1/8"H x 3-3/8"W
- Bright yellow label with black printing
- Full roll = 500 labels

Part Number		Price per ea.	L/100
95-0723-1T	1 Token 1 Play	.38	.30
95-0723-2T	2 Token 1 Play	.38	.30
95-0723-3T	3 Token 1 Play	.38	.30
95-0723-4T	4 Token 1 Play	.38	.30
95-0723-5T	5 Token 1 Play	.38	.30
95-0723-6T	6 Token 1 Play	.38	.30
95-0723-1Q	Quarters Only $.25 1 Play	.38	.30
95-0723-2Q	Quarters Only $.50 1 Play	.38	.30
95-0723-3Q	Quarters Only $.75 1 Play	.38	.30
95-0723-4Q	Quarters Only $1.00 1 Play	.38	.30
95-0723-5Q	Quarters Only $1.25 1 Play	.38	.30
95-0723-6Q	Quarters Only $1.50 1 Play	.38	.30

PRESSURE SENSITIVE PRICE LABELS

- 9 /16" x 7 /8", Black on White,
- 500 per roll, sold each
- Minimum order quantity- 10

Part Number		Price per ea.	L/10	L/50
27-1283-00	50 cents		.25	.20
27-1284-00	55 cents		.25	.20
27-1285-00	60 cents		.25	.20
27-1286-00	65 cents		.25	.20
27-1287-00	70 cents		.25	.20
27-1288-00	75 cents		.25	.20

PRESSURE SENSITIVE LABELS

- 1-3 /4" x 3-1 /2"
- Black on Silver
- Minimum order quantity- 10

Part Number		L/10	L/50
49-0645-00	50 cents	.61	.48
49-0646-00	55 cents	.61	.48
49-0647-00	60 cents	.61	.48
49-0653-00	65 cents	.61	.48

PRESSURE SENSITIVE PRICE LABELS

- 1" x 1-1 /2"
- Black on Silver
- Minimum order quantity- 10

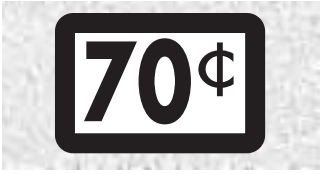

Part Number		L/10	L/50
27-1115-00	25 cents	.22	.20
27-1114-00	50 cents	.22	.20
27-1116-00	70 cents	.22	.20
27-1113-00	75 cents	.22	.20
27-1117-00	1 dollar	.22	.20
27-1183-00	$1.25	.22	.20
27-1185-00	$1.50	.22	.20

"PRICE INCLUDES" LABEL

- 1-1 /4" x 2"
- Red on White
- Minimum order quantity- 10

Part Number		L/10	L/50
49-0644-00	"Price Includes" Label	.38	.30

COIN REJECT BUTTON INSERT LABELS

- White characters on black background
- Made of Mylar
- 1.05" high x .73" wide x .01" thick
- Minimum order quantity- 10

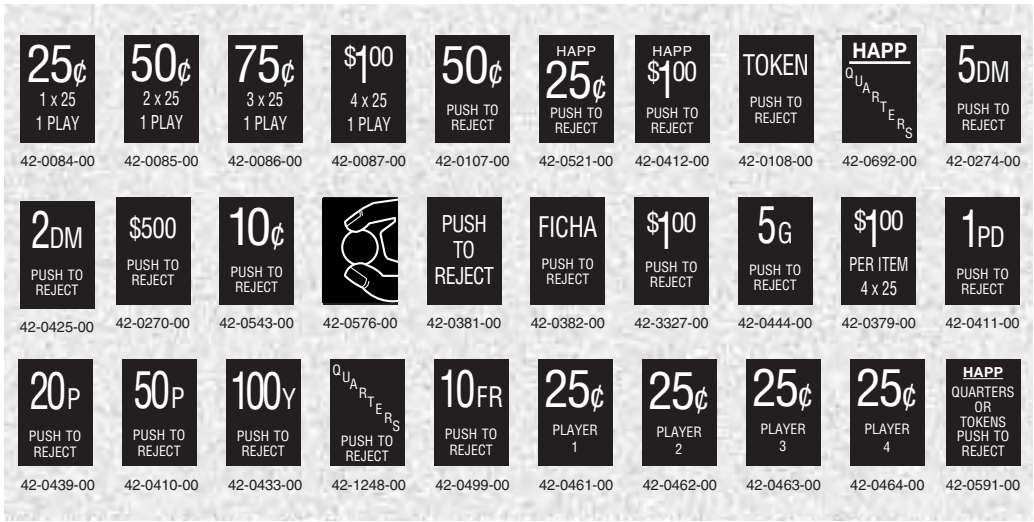

Price per ea.	L/10	L/100
See chart for Part Number		
Denomination Inserts	.71	.61

Minimum Order Quantity – 10

© HAPP CONTROLS

HAPP 7-DIGIT METER WITH BRACKET

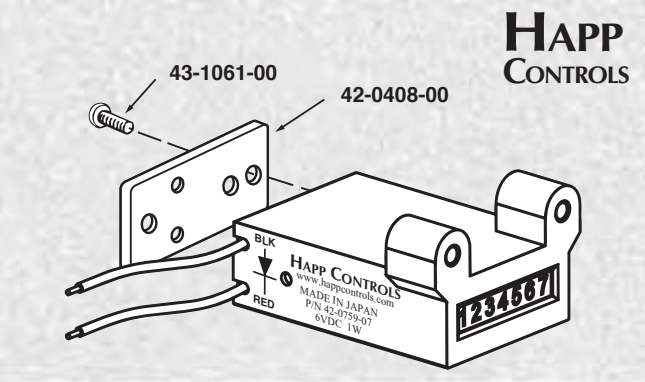

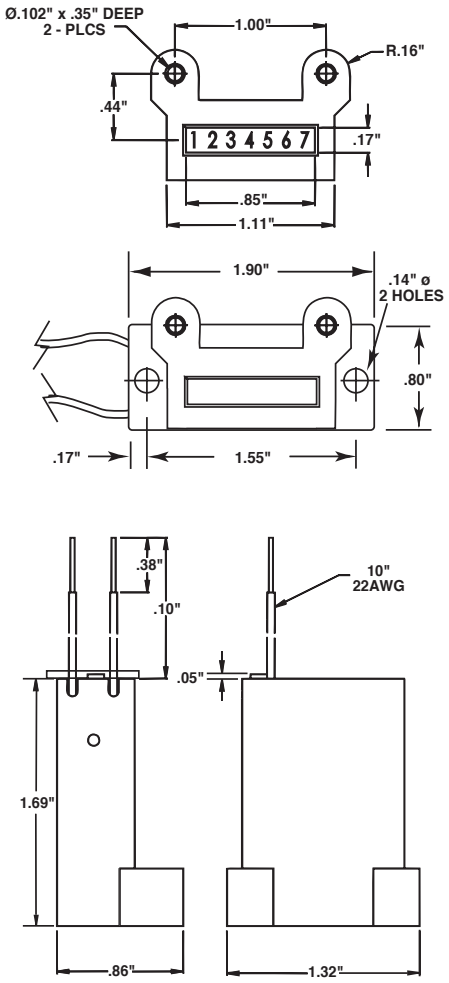

Part Number		Price per ea.	L/100
42-0759-07	6vdc 7-digit Meter w/Bracket	6.85	6.35
42-0754-07	12vdc 7-digit Meter w/Bracket	6.85	6.35
42-1179-07	24vdc 7-digit Meter w/Bracket	6.85	6.35
42-0408-00	Bracket for Happ Meter	.92	.82
43-1061-00	Screw M3 x 6	.15	.15

HAPP 7-DIGIT METER

- 7 digit non-resetable
- Low cost, small size
- Internal diode
- Flying leads
- Service life: 1,000,000 cycles
- Magnifying window
- Low power consumption: 1.3 watt
- High speed: 10 counts per second
- High quality – each meter tested at max speed for 5,000 counts before shipment
- Without mounting bracket

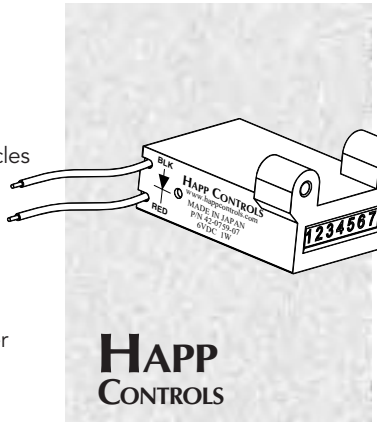

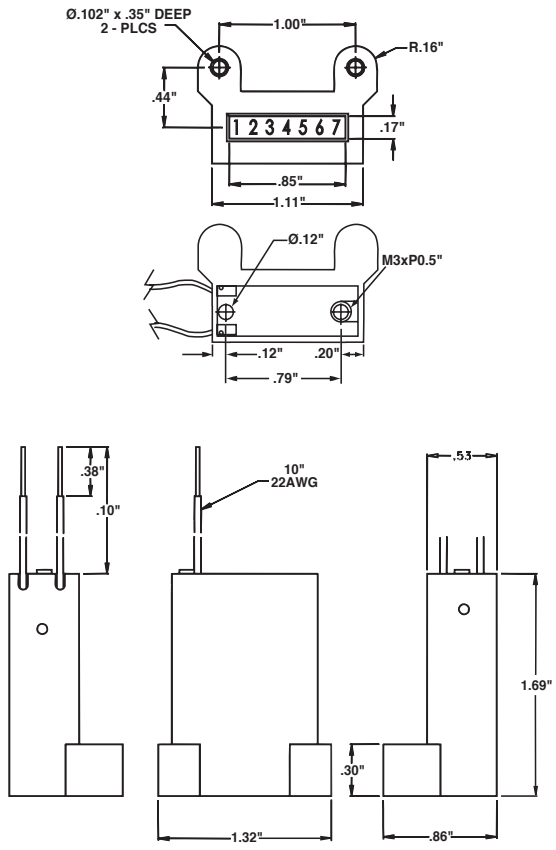

Part Number		Price per ea.	L/100
42-0756-07	6vdc 7-digit Meter (also rated 5vdc)	6.15	5.65
42-0750-07	12vdc 7-digit Meter	6.15	5.65
42-1178-07	24vdc 7-digit Meter	6.15	5.65

KESSLER ELLIS 6-DIGIT METER

- Electric, non-resettable counter
- 6 digit, counts to 999,999 then repeats
- 600 counts per minute
- With mounting bracket
- With or without diode
- 10" wire leads

6-DIGIT METER W/BRACKET DIMENSIONS

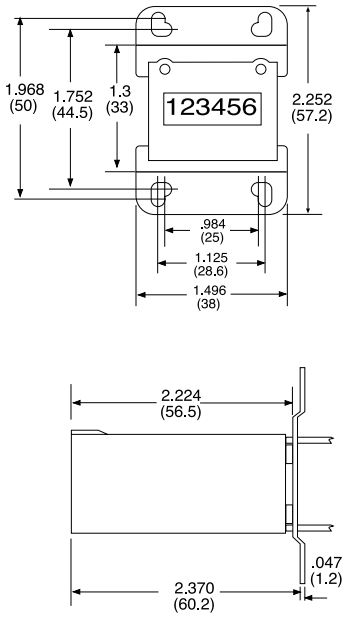

6-DIGIT METER WITHOUT BRACKET DIMENSIONS

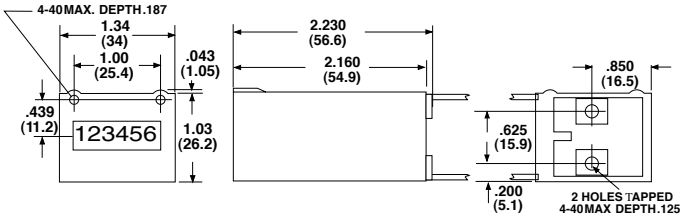

Part Number	Voltage	Bracket	Diode	Price per ea.	L/24
42-1168-00	4.5/6 DC	Yes	No	5.55	5.20
42-2093-00	4.5/6 DC	Yes	Yes	6.15	5.85
42-2093-01	4.5/6 DC	No	Yes	6.15	5.85
42-0614-00	12 DC	Yes	Yes	6.15	5.85
42-0092-00	12 DC	Yes	No	5.80	5.45
42-6914-00	12 DC	No	Yes	6.15	5.85
42-1317-00	24 DC	Yes	No	5.80	5.45
42-3140-00	24 AC	Yes	No	6.75	6.45
42-7032-00	24 DC	Yes	Yes	7.00	6.40
42-1396-00	48 AC	Yes	No	6.75	6.45
42-1167-00	120 AC	Yes	No	6.75	6.45
42-1169-00 (72" Leads)	120 AC	Yes	No	7.25	6.95

KESSLER ELLIS PC BOARD MOUNT 7-DIGIT METER

- Ideal for gaming applications
- 7-digit non-resettable counter
- High speed: 25 counts per second
- PC Board Mount
- Small size
- .022" Pins
- Available in various voltages

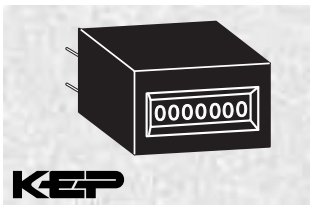

7-DIGIT METER DIMENSIONS

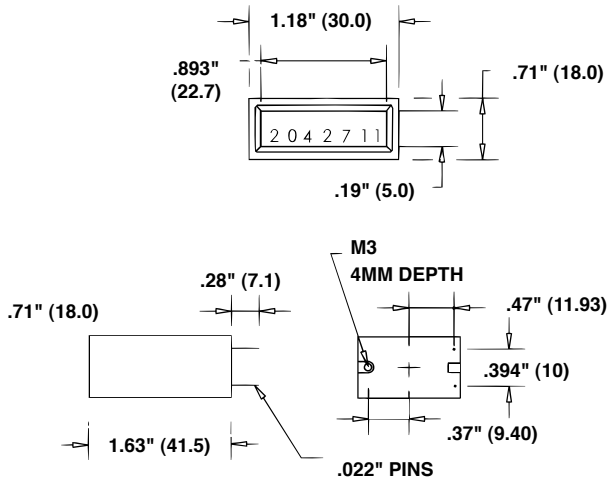

Part Number		Price per ea.	L/100
42-0754-5V	5vdc 7-Digit PC Board Mount Meter	9.65	8.95
42-0754-12V	12vdc 7-digit PC Board Mount Meter	9.65	8.95
42-0754-24V	24vdc 7-Digit PC Board Mount Meter	9.65	8.95

Visit Our Web Site:
happcontrols.com
for **NEW** Product Updates!!

EMIT 6-DIGIT METER

- 6 digit non-resettable
- Service life: 1,000,000 cycles
- High speed: 25 counts per second
- Without diode
- Flying leads

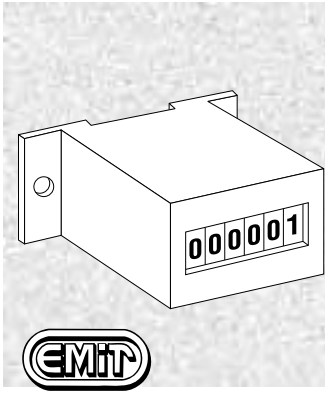

6-DIGIT METER DIMENSIONS

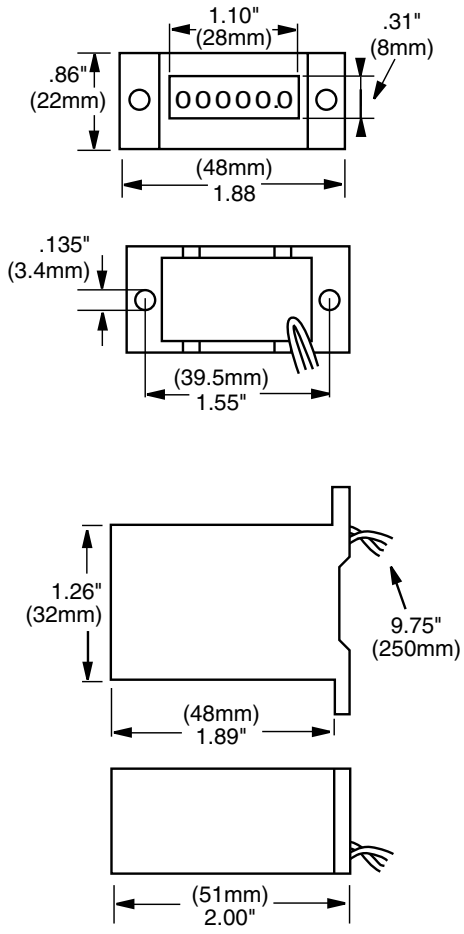

Part Number		Price per ea.	L/100
42-0562-00	6vdc 6-Digit Meter (also rated 5vdc)	7.00	6.45
42-0563-00	12vdc 6-Digit Meter	7.00	6.45

EMIT 5-DIGIT RESETTABLE METER

- 5 digit resettable
- Service life: 1,000,000 cycles
- High speed: 15 counts per second
- Flying leads
- Without diode
- Includes mounting bracket

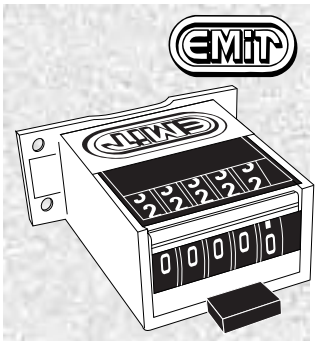

5-DIGIT METER DIMENSIONS

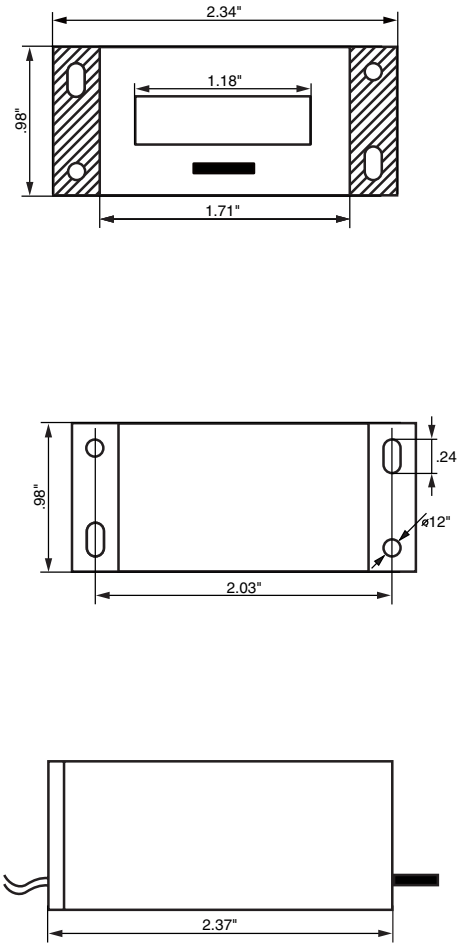

Part Number		Price per ea.	L/100
42-0761-00	6vdc 5-Digit Resettable Meter	15.75	14.55
42-0755-00	12vdc 5-Digit Resettable Meter	15.75	14.55

COIN SWITCHES

- Available with straight wire or custom bend to fit specific applications

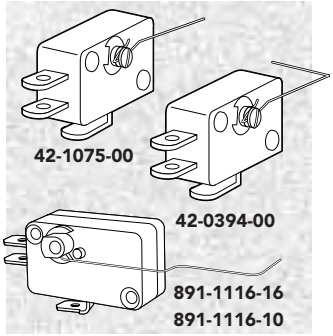

Part Number		Price per ea.	L/100
42-1075-00	Coin Switch Assembly w/straight wire	3.40	2.85
42-0394-00	Coin Switch Assembly w/bend for Happ Coin Doors	3.60	3.05
891-1116-10	Coin Controls Coin Switch with Formed Actuator, Red	4.45	3.95
891-1116-16	Coin Controls Coin Switch with Formed Actuator, Black	4.35	3.85
42-0200-00	Straight Wire Only, 3.25"	.23	-
42-7087-00	Coin Switch Assembly Crouzet .250 Terminal	4.30	3.75

REPLACEMENT PARTS FOR WELLS GARDNER/COIN CONTROLS

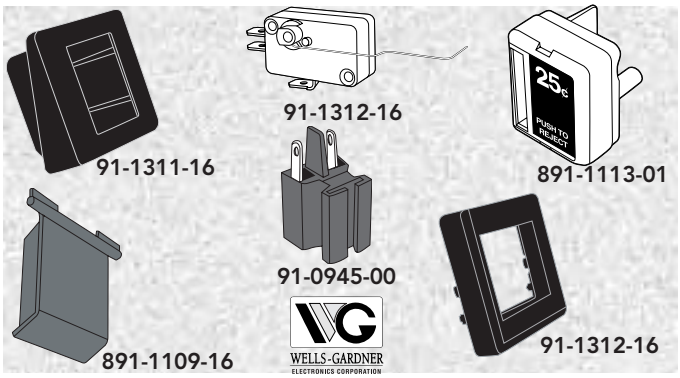

Part Number	Coin Controls Ref.		Price per ea.
42-3157-00	891-1107-00	Switch Bracket	3.55
891-1109-16	891-1109-16	Coin Return Flap, Black	2.30
891-1113-01	891-1113-01	Reject Button, Red $0.25 Insert	3.95
891-1116-10	891-1116-10	Coin Controls Coin Switch with Formed Actuator, Red	4.00
891-1116-16	91-1116-16	Coin Controls Coin Switch with Formed Actuator, Black	4.35
891-0945-00	891-1117-00	Lamp Socket	2.40
891-1121-001	891-1121-00	Spring for Return Bezel	1.30
891-1311-16	891-1311-16	Reject Bezel, Black Nylon	3.20
891-1312-16	891-1312-16	Return Bezel, Black Nylon	5.05
891-2216-03	891-2216-03	Coin Switch with Bracket for DBV Door	20.30
892-1002-04	892-1002-04	Hold Down Bracket for Validator Door	5.80
892-1002-10	892-1002-10	Mech Hold Down Bracket	5.80

REJECT BUTTON ASSEMBLY

- Available in red, blue, yellow, green and amber
- Fits all HAPP doors
- See page 216 for Reject Button Insert Labels

REJECT BUTTON ASSEMBLY

00 = Red w/.25¢ insert
02 = Blue w/.25¢ insert
03 = Green w/.25¢ insert
05 = Yellow w/.25¢ insert
07 = Amber w/.25¢ insert

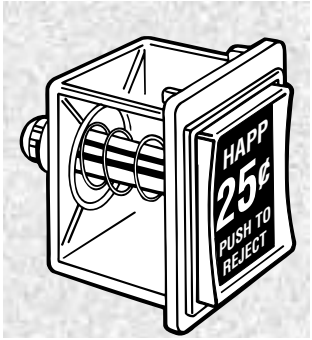

Part Number		Price per ea.	L/100
42-0517-XX	Reject Button Assembly	4.30	3.75

TOP COIN ENTRY

- Heavy-duty chrome-plated die cast construction
- Spring loaded reject button
- Plunger length: .50"

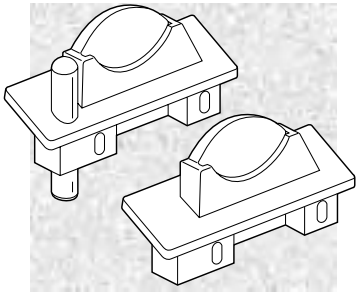

MOUNTING DIMENSIONS

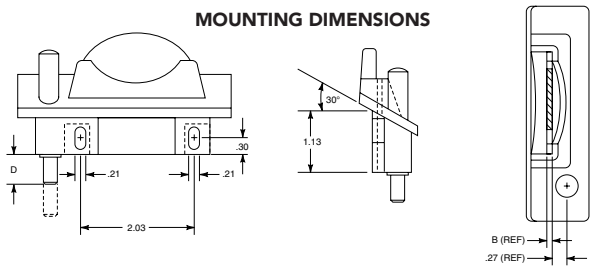

Part Number		Price per ea.	L/25
42-1350-00	With Plunger, D=0.54"	24.10	21.70
42-1351-00	With Plunger, D=1.95"	24.10	21.70
42-1370-00	Without Plunger	19.15	17.20

TOP COIN ENTRY SYSTEM

- Innovative design
- Allows flexibility of coin acceptance to be designed within the control panel of the video game for players' convenience
- $.25 US Mech. fitted as standard
- "Universal" mech. holder design. Will fit **all** known 3" x 5" mechanical and electronic acceptors on the market

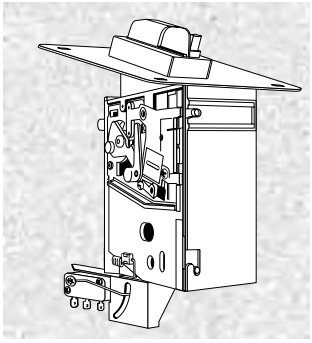

Part Number		Price per ea.	L/6
40-0350-90	Top Coin Entry System with 10° incline	29.00	27.75
40-0350-50	Top Coin Entry System with 0° incline	29.00	27.75

© HAPP CONTROLS

PLASTIC TOP COIN ENTRY

- Durable ABS plastic
- Available with long or short shaft
- Spring loaded reject button
- For use with back channel assembly

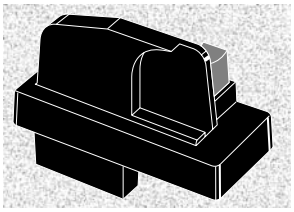

Part Number		Price per ea.	L/25
42-0177-00	Plastic Top Coin Entry, Short Shaft	9.70	9.15
42-0176-00	Plastic Top Coin Entry, Long Shaft	9.70	9.15

COIN RETURN CUP

- Heavy-duty chrome or gold plated die cast construction
- Thread size 6-32

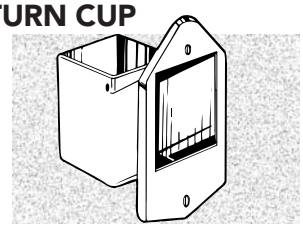

MOUNTING DIMENSIONS

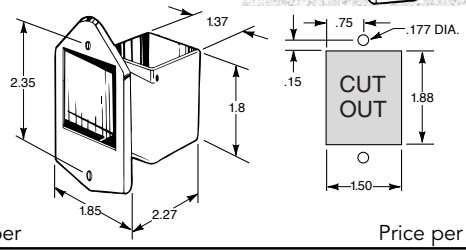

Part Number		Price per ea.	L/25
42-0259-00	Coin Return Cup w/o Door, Chrome	8.55	7.60
42-0259-18	Coin Return Cup w/o Door, Gold	9.15	8.20

BACK CHANNEL ASSEMBLY

- With coin switch
- With 25¢ coin mech
- Mech fitted with custom funnel

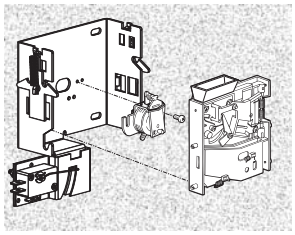

Part Number		Price per ea.	L/25
42-1116-00	Back Channel w/Mech & Lockout	40.15	37.15
42-1117-00	Back Channel w/Mech no Lockout	32.05	29.60
42-1118-00	Back Channel w/o Mech w/Lockout	21.25	19.35
WGD13-5000-10	Back Channel w/o Mech & Lockout	13.05	12.05

PLASTIC BACK CHANNEL ASSEMBLY

- "Universal" mech. holder design. Will fit **all** known 3" x 5" mechanical and electronic acceptors on the market
- Optional lockout coil available
- $.25 US Mech. fitted as standard

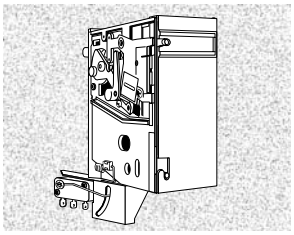

Part Number		Price per ea.	L/25
42-1398-00	Plastic Back Channel with Mech.	22.90	21.75

HAPP CONTROLS SELLS BRAND NAME QUALITY

BILL VALIDATOR SERVICE CENTER

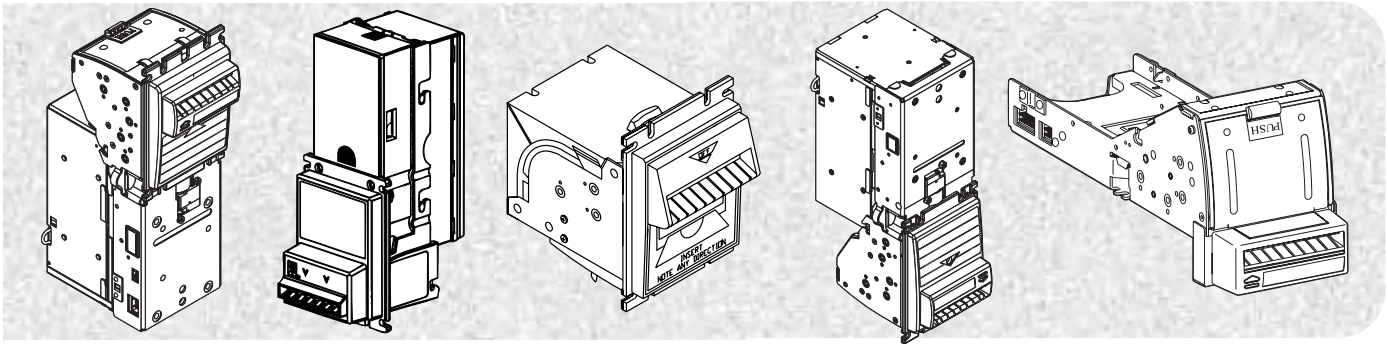

- **Factory authorized service for CashCode and MEI bill validators**
- **Quick turnaround time**
- **30 day warranty on all repairs**
- **Factory trained technicians**
- **Repair cost is $37.50 plus parts**
- **Repairs are done in our Elk Grove service center**

CashCode®

mei™

SEND UNITS TO BE REPAIRED TO:

Happ Controls Service Center
106 Garlisch Drive
Elk Grove, Il 60007

© HAPP CONTROLS

$$$ NexGen CURRENCY IS HERE $$$

The New Color of Money: Safer, Smarter, More Secure.

- U.S. Treasury and Federal Reserve Released the Redesigned $20 Notes on October 9, 2003

- In an effort to stay ahead of counterfeiting, the U.S. Department of the Treasury's Bureau of Engraving and Printing and the Federal Reserve System introduced the newly redesigned currency on October 9, 2003. The newly redesigned bills are safer, smarter and more secure and include enhanced security features and other new designs that help deter counterfeiting and protect your hard-earned money. For the first time in recent history, the newly redesigned currency includes a subtle introduction of color, which will make it more burdensome to counterfeit and make it easier to distinguish denominations.

- Circulation of the new series began on October 9, 2003 with the issuance of the redesigned $20 note. New designs for the $50 and $100 notes will follow in 2004 and 2005. The redesign of the $10 and $5 notes is still under consideration, but a redesign of the $2 and $1 notes is not planned.

- You can bank on Happ Controls to keep you up to date on all the latest currency changes. Happ Controls will be able to supply you with all the latest software and EPROM upgrades. Call your sales representative today.

NexGen $20 Note Started October 9, 2003

CASHCODE NEXGEN $20 UPGRADES

On October 9, 2003 the Bureau of Engraving and Printing introduced the new NexGen $20 bill. Keep your CashCode bill validators functioning properly and avoid any lost revenue by updating today!

- Three different EPROM updates available depending on your model:

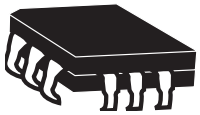

EPROM

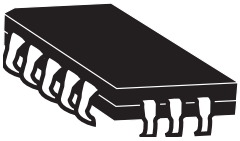

PLCC

DIP

Happ Controls NexGen $20 Update Part Number	Type	Model	CashCode Bill Validator Part Number	CashCode Update Part Number	Price per ea.
Stacker Models					
42-0918-00	EPROM	ST07, USA-1100	US6-DSR-ST07-Mxx (42-6972-00 & 42-6966-00)	US6R_S40	$14.00
42-0920-00	PLCC	ST07, USA-PLUS	US4-CSP-ST07-Mxx (42-6965-00 & 42-6970-00)	US4A_S40	$30.00
Stackerless Models					
42-0921-00	PLCC	BV05, USA-PLUS	US4-CS0-BV05 (42-6952-00)	US4XA_40	$30.00
Stacker 24Volt MDB Models					
42-0924-00	PLCC	ST03, USA-MDB	US5-MCP-ST03-Mxx	US5B_S44	$30.00
Older 12 Volt Stacker Models					
42-0928-00	EPROM	ST07, USA-1100 (Wire)	AMZ-USA-1100-UNV;SD(U) Older 42-6972-00	US60A_40	$15.00
42-0935-00	PLCC	ST07, USA-PLUS (Wire)	AMZ-USA-PLUS-UNV;SD(U) (Older 42-6970-00)	US40A_40	$35.00
42-0945-00	MC (DIP)	ST01, USA-PLUS (Wire)	ST-D/S-USA/AMZ/-2A	US41A_40	$45.00

DO YOU WANT TO KNOW EACH TIME YOUR ORDER SHIPS OUT?

e-mail notification and order **tracking information** is now available from Happ Controls! Contact your sales representative or e-mail our customer service department at: **info@happcontrols.com** with your account information.

© HAPP CONTROLS

MEI BILL PROGRAMMING MODULES (BPM)

ON OCTOBER 9, 2003, THE BUREAU OF ENGRAVING AND PRINTING INTRODUCED THE NEW NEXGEN $20 BILL

MEI MAKES REPROGRAMMING SIMPLE WITH THEIR NEW BPM'S

- You can quickly and easily update your Series 2600, 2800 and 3000 MEI Bill Validators
- The BPM's flash download new software directly into the bill validator via the included interconnect cable
- A refundable deposit of $149.00 for the BPM is required
- BPMs must be returned within 60 days for the credit of $149.00
- Once all the credits have been used, you can return your BPM for credit with a proper RMA
- **No refund issued for unused credits**
- Kit includes:
  Bill Programming Module with credits
  Interconnect cable
  "New Currency Ready" green or orange label

NEW CURRENCY READY *NEW CURRENCY READY V2*

Part Number		Price per ea.
BPM-AE2000-05	AE2600/2800 BPM w/5 Credits	75.00*
BPM-AE2000-10	AE2600/2800 BPM w/10 Credits	150.00*
BPM-AE2000-15	AE2600/2800 BPM w/15 Credits	225.00*
BPM-AE2000-20	AE2600/2800 BPM w/20 Credits	300.00*
BPM-AE2000-25	AE2600/2800 BPM w/25 Credits	375.00*
BPM-AE2000-50	AE2600/2800 BPM w/50 Credits	500.00*
BPM-AE2000-100	AE2600/2800 BPM w/100 Credits	1,000.00*
BPM-AE2000-150	AE2600/2800 BPM w/150 Credits	1,500.00*
BPM-AE2000-200	AE2600/2800 BPM w/200 Credits	2,000.00*
BPM-AE2000-250	AE2600/2800 BPM w/250 Credits	2,500.00*
BPM-LE3000-05	LE3800/3900 BPM w/5 Credits	75.00*
BPM-LE3000-10	LE3800/3900 BPM w/10 Credits	150.00*
BPM-LE3000-15	LE3800/3900 BPM w/15 Credits	225.00*
BPM-LE3000-20	LE3800/3900 BPM w/20 Credits	300.00*
BPM-LE3000-25	LE3800/3900 BPM w/25 Credits	375.00*
BPM-LE3000-50	LE3800/3900 BPM w/50 Credits	500.00*
BPM-LE3000-100	LE3800/3900 BPM w/100 Credits	1,000.00*
BPM-LE3000-150	LE3800/3900 BPM w/150 Credits	1,500.00*
BPM-LE3000-200	LE3800/3900 BPM w/200 Credits	2,000.00*
BPM-LE3000-250	LE3800/3900 BPM w/250 Credits	2,500.00*
BPM-Deposit	*Deposit for BPM (Credit to be applied if returned within 60 days)	149.00

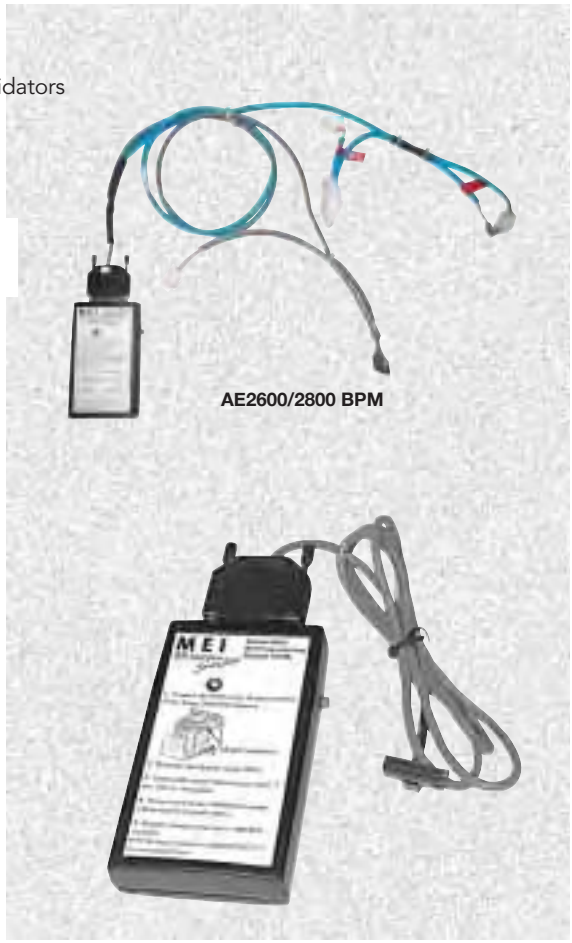

AE2600/2800 BPM

LE3800/3900 BPM

LET HAPP CONTROLS DO THE UPGRADE FOR YOU!
MEI-NEXGEN-PROG $25.00

SEE PAGE 222 FOR BILL VALIDATOR SERVICE CENTER INFO

CONTROL BOARD UPGRADE WITH EXPANDED CAPABILITIES FOR MEI AE2600 BILL VALIDATORS

This new control board upgrade adds new features to existing AE2600

- Software programmed to take NexGen $20
- Ability to accept MEI custom coupons used for refunds, promotions, etc.
- Additional memory to accept future upgrades,- $5 & $10 is under redesign evaluation (the memory on current AE2600 is near capacity)
- Hard reset capability
- Available for either 115v or 24v MEI AE2600 validators

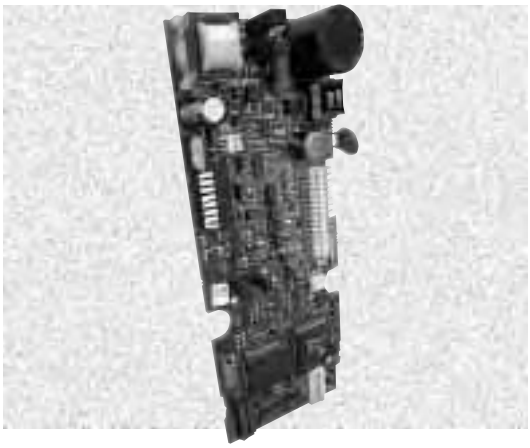

Part Number		Price per ea.
42-0740-00	Control Board Upgrade – 24v	75.00
42-0741-00	Control Board Upgrade – 115v	75.00

$$$ NexGen CURRENCY IS HERE $$$

The New Color of Money: Safer, Smarter, More Secure.

- U.S. Treasury and Federal Reserve Released the Redesigned $20 Note on October 9, 2003
- In an effort to stay ahead of counterfeiting, the U.S. Department of the Treasury's Bureau of Engraving and Printing and the Federal Reserve System introduced the newly redesigned currency in October 9, 2003. The newly redesigned bills are safer, smarter and more secure and include enhanced security features and other new designs that help deter counterfeiting and protect your hard-earned money. For the first time in recent history, the newly redesigned currency includes a subtle introduction of color, which will make it more burdensome to counterfeit and make it easier to distinguish denominations.
- Circulation of the new series began in October, 2003 with the issuance of the redesigned $20 note. New designs for the $50 and $100 notes will follow in 2004 and 2005. The redesign of the $10 and $5 notes are still under consideration, but a redesign of the $2 and $1 notes are not planned.
- You can bank on Happ Controls to keep you up to date on all the latest currency changes. Happ Controls will be able to supply you with all the latest software and EPROM upgrades.
  Call your sales representative today.

NexGen $20 Note Started October 9, 2003

© HAPP CONTROLS

ICT A6/V6 NEXGEN $20 UPGRADES
ICT FLASH PROGRAMMING MODULES (FPM)

- On October 9, 2003 the Bureau of Engraving and Printing introduced the new NexGen $20 Bill
- Re-programming your ICT A6 or V6 bill validators is easy with the ICT Flash Program Module
- Start upgrading your Bill Validators today
- You can quickly and easily update your A6 or V6 ICT Bill Validators
- The FPM's flash download new software directly into the Bill Validator via the included interconnect cable
- Kit Includes:
  Flash Programming Module with NexGen $20 software
  Interconnect cable
  ICT "New Currency Ready" label to place on validator after updated

Part Number		Price per ea.
FP001-A6	Flash Programming Module (FPM) A6	150.00
FP001-V6	Flash Programming Module (FPM) V6	150.00

ICT BL700 NEXGEN $20 EPROM UPGRADES

- Upgrade your BL700 Bill Validators with new NexGen $20 updated EPROMS
- Changing the EPROM is easy, simply open the access cover, lift out the old EPROM, re-insert the new EPROM, replace the access cover and you are ready to accept the new NexGen $20 bills
- Includes: ICT "New Currency Ready" Label to place on validator after updated

Part Number		Price per ea.	L/10
BL700-$20NEXGEN	ICT NexGen $20 EPROM update	15.00	12.00

ICT B70UF STACKERLESS BILL VALIDATOR

NEW

- Accepts US $1, $5, $10 & $20 bills
- Bills can be inserted 4-ways
- Accepts new currency
- Ultimate acceptance rates
- Software can be quickly updated through the built-in connector (Flash ROM)
- The new anti-stringing function has 99.99% success rate
- Superior security
- Fast, efficient bill handling
- Easy to remove/open/clean acceptor
- Auto self-adjusting sensor system
- Validation time of 4 seconds or less
- Maintenance is reduced through recessed optic sensors
- Optic sensors read both sides of the bill for added security
- Lighted bezel makes bill insertion easy
- Easily accessible dip switches
- Complete with mounting plate, hardware, decals, and power cord
- Warranty: 1 year parts and labor
- Model B70UF, +12vdc

Part Number	Model	To Accept	Price per ea.
42-0968-00	B70UF	$1,5,10,20,100 US	210.00

ICT 110VAC TO 12VDC CONVERSION HARNESS

NEW

- Now it's easy to use an ICT validator with an existing MEI harness
- Converts the MEI 110VAC harness to a 12VDC ICT application
- This is an easy plug and use system, no cutting or soldering required

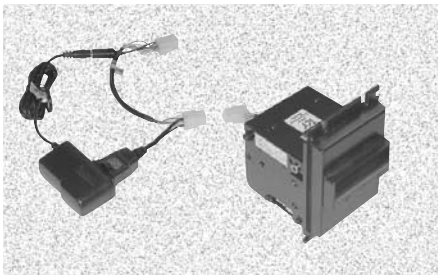

Part Number		Price per ea.
42-0988-00	ICT 110VAC to 12VDC Conversion Harness	Call for Pricing

ICT STACKERLESS BILL VALIDATOR

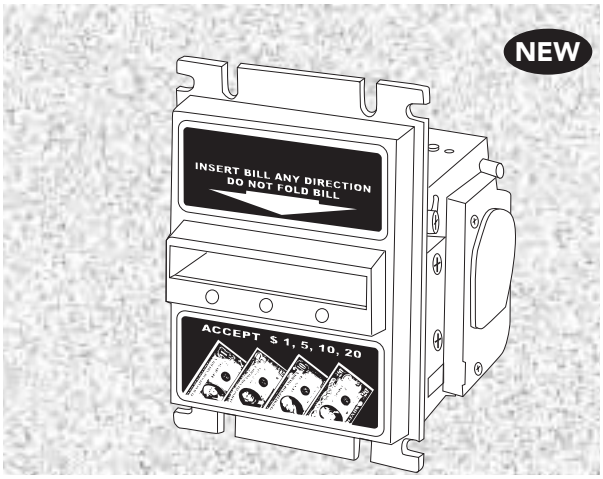

- Accepts US $1, $5, $10 & $20 bills
- Bills can be inserted 4-ways
- Accepts new currency
- High acceptance rate: 90% or better
- Validation time of 4 seconds or less
- Maintenance is reduced through recessed optic sensors
- Optic sensors read both sides of the bill for added security
- High quality at a great price
- Bill path is easily accessible from the top via hinged lid, no tools required
- Lighted bezel makes bill insertion easy
- Easily accessible dip switches
- Complete with mounting plate, hardware, decals, and power cord
- Warranty: 1 year parts and labor
- Model BL-700 +12vdc
- International models available on a special order basis

Part Number	Model	To Accept	Bill Capacity	Voltage	Price per ea.
42-3653-00	BL-700-USD4	$1, $5, $10, $20 US	Stackerless	110 VAC	195.00
42-0089-00	BL-700-BRA4	$1, $5, $10, $20, $100 Real	Stackerless	110 VAC	195.00
42-3708-00	BL-700-DOP3	$10, $20, $50 Peso	Stackerless	110 VAC	195.00
42-3723-00	BL-700-MXB3	$20, $50 Peso	Stackerless	110 VAC	195.00

ICT VALIDATORS-US4 SERIES WITH UPSTACKER

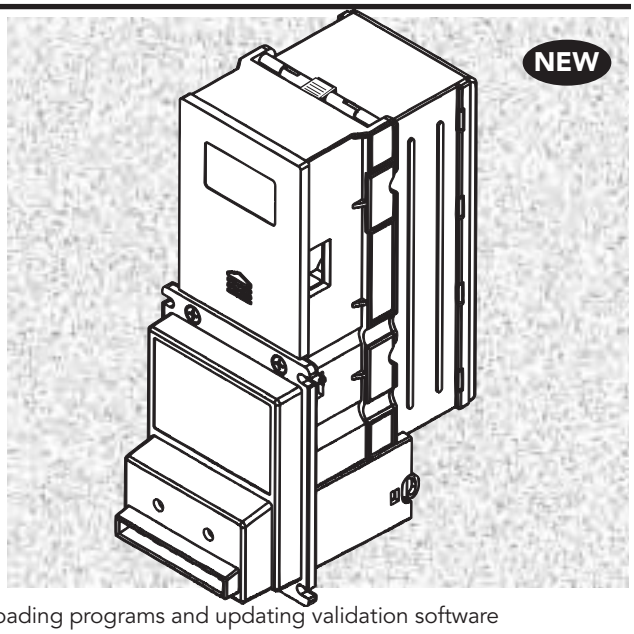

- Accepts US $1, $5, $10, & $20 bills
- Bills can be inserted 4-ways
- Accepts new currency
- High Acceptance rate: 96% or better
- Fast validation time of 3 seconds (including bill stacking)
- 300, 500 or 800 bill capacity upstacker models available
- Optic sensors read both sides of the bill for added security
- Auto self-adjusting sensor system
- Reprogrammable flash ROM
- Easily accessible dip switches
- Lighted bezel makes bill insertion easy
- Bill path is easily accessible by pressing two buttons
- Complete with mounting hardware, decals, and power cord
- All standard bezel validators come with mounting kit
- Easy installation and low maintenance
- Handy 8-pin RJ-45 connector on the side of the bill validator for downloading programs and updating validation software
- Comes standard as 110v, but can also be powered by 12vdc with optional cable (WEL-M007)
- Two year warranty

Part Number	Model	Bill Capacity	Voltage	Bezel	Accepts	Price per ea.
42-3701-00	A613-FOP-US4	300	110 VAC	Fitted	$1,5,10,20 US	280.00
42-0326-00	A613-SCP-USA	300	110 VAC	Standard	$1,5,10,20 US	280.00
42-0062-00	A613-FOP-BRA4	300	110 VAC	Fitted	$1,5,10,20,100 Real	280.00
42-0327-00	A615-FOP-US4	500	110 VAC	Fitted	$1,5,10,20 US	280.00
42-3703-00	A615-SOP-US4	500	110 VAC	Standard	$1,5,10,20 US	280.00
42-0332-00	A618-SCP-US4	800	110 VAC	Standard	$1,5,10,20 US	280.00
42-0053-00	A618-FOP-US4	800	110 VAC	Fitted	$1,5,10,20 US	280.00
42-0238-00	A713-A2P-CAD4	300	110 VAC	Fitted	$2,5,10,20 Canada	283.00
42-0289-00	A715-A2P-CAD4	500	110 VAC	Fitted	$2,5,10,20 Canada	288.70
42-3724-00	A723-SOM-EUR3	300	12 VDC	Fitted	$1,5,10,20 Euro	283.00

Optional Cassettes for Stackers

Part Number	Model	Bezel	Bill Capacity	Price per ea.
42-0299-00	S6-S3	Fitted Bezel Only	300	50.00
42-0318-00	S6-S5	Fitted Bezel Only	500	50.00
42-0058-00	S6-S8	Fitted Bezel Only	800	49.00
42-0317-00	S6-B5	Standard Bezel Only	300	50.00
42-3731-00	S6-B5	Standard Bezel Only	500	49.00
42-0090-00	S6-B8	Standard Bezel Only	800	49.00

For NexGen $20 update information see page 223

© HAPP CONTROLS

MEI BILL VALIDATORS-AE2400 SERIES

- Advanced sensing technology allows high acceptance rate by accepting torn, wrinkled, faded, damp, dirty, limp, folded or mutilated bills
- Non-contact optical sensors eliminate pinch rollers offering a smooth bill path that reduces jams
- Low Maintenance: Streamlined recognition system sensors are embedded under the smooth plastic bill path and the magnetic pinch roller has been eliminated dramatically reducing debris buildup and the need for cleaning
- Security: Fully-encased optical sensors check paper type and the printing on both sides of the bill, while optical cross channel sensors examine the bill path for foreign objects such as clear tape or strings. This bill validator rejects most of the known counterfeits accepted by ordinary bill acceptors - through the use of multiple wavelength optical sensing and sophisticated data processing
- Flash memory programmable; as more new US bill designs are released, the Validator can easily be updated in the field
- Fully accessible bill path
- Lighted bezel with easy-to-read diagnostic lamps
- Easy-to-use dip switch settings and coupon configuration
- Holds rejected bills
- Self-generated jam-clearing function
- Fully contained control box
- Expandable upstacker or downstacker magazine
- Lightweight unitized design for applications where cube space is a premium
- Locking hasp available
- Accepts bills in any direction
- 2 Year Warranty

For NexGen $20 update information see page 223

Happ Controls is an authorized MEI Service Center. (See page 222)

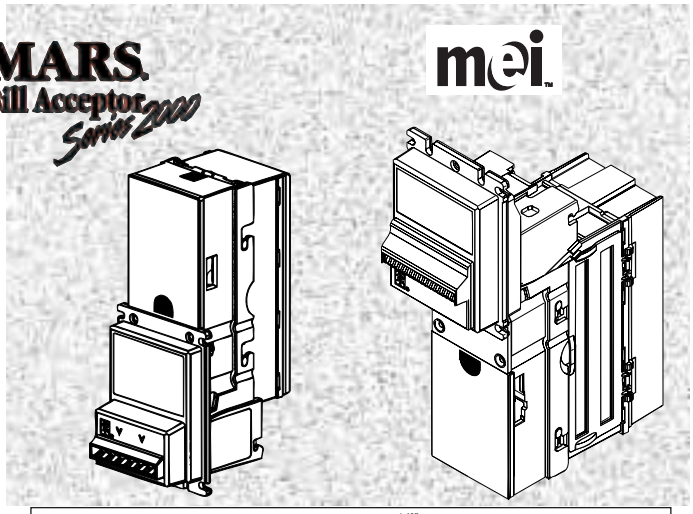

Validator Dimensions AE2400 Downstacker with VFM5S Bezel

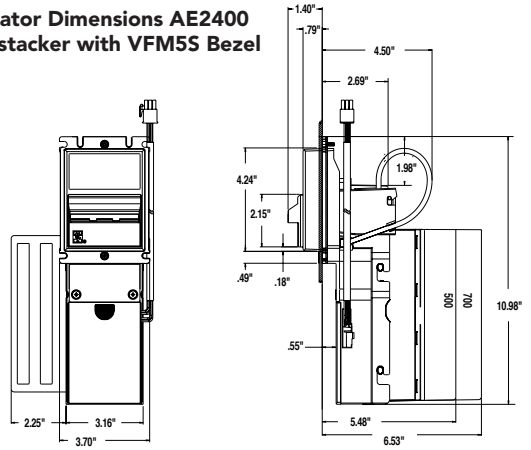

Validator Dimensions AE2400 Upstacker w/Compact Fitted Bezel

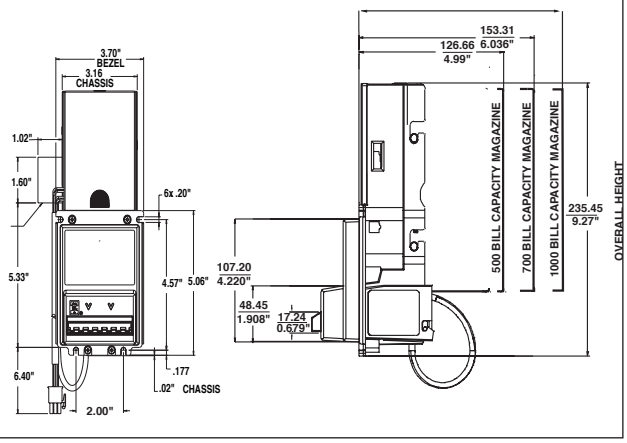

Configuration Key

Amusement and Entertainment Bezel:
1 = Compact
3 = VFM55 Downstacker
5 = Compact Fitted

Stacker:
U = Upstacker
D = Downstacker

Magazine Size:
2 = 200 bills
3 = 300 bills
5 = 500 bills
7 = 700 bills

AE 24 X X — X X X

Voltage:
1=110 VAC
2= 24 VAC/MDB

Custom Configuration:
E = Includes harness for Single Price Coin Mech, w/bill escrow
M = Includes MDB harness

Bezel Options:

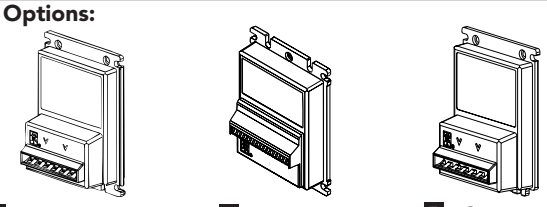

1 – Compact Bezel

3 – VFM5S Downstacker Bezel

5 – Compact Fitted Bezel

Part Number	Model	To Accept	Bill Capacity	Voltage	Price per ea.
42-7434-00	AE-2411-U5E	$1, $2 & $5	500 Bills	110VAC	439.90
42-2055-00	AE-2412-U3E	$1, $2 & $5	300 Bills	24VAC	416.75
42-6936-00	AE-2412-U5E	$1, $2 & $5	500 Bills	24VAC	439.90
42-2056-00	AE-2412-U7E	$1, $2 & $5	700 Bills	24VAC	463.05
42-8102-00	AE-2431-D5E	$1, $2 & $5	500 Bills	110VAC	463.05
42-8103-00	AE-2431-D7E	$1, $2 & $5	700 Bills	110VAC	490.90
42-8100-00	AE-2432-D5E	$1, $2 & $5	500 Bills	24VAC	453.85
42-8101-00	AE-2432-D7E	$1, $2 & $5	700 Bills	24VAC	481.60
42-1155-00	AE-2451-U3E	$1, $2 & $5	300 Bills	110VAC	416.75
42-6935-00	AE-2451-U5E	$1, $2 & $5	500 Bills	110VAC	439.90
42-2054-00	AE-2451-U7E	$1, $2 & $5	700 Bills	110VAC	463.05
42-7348-00	AE-2411-U5EBL	$1 & $5-REALS (BRAZIL)	500 Bills	110VAC	578.85

MEI BILL VALIDATORS-AE2600 SERIES

- High, secure 4-way acceptance of $1, $2, $5, $10, $20 bills
- Advanced sensing technology allows high acceptance rate by accepting torn, wrinkled, faded, damp, dirty, limp, folded or mutilated bills
- Non-contact optical sensors eliminate pinch rollers offering a smooth bill path that reduces jams
- Low Maintenance: Streamlined recognition system sensors are embedded under the smooth plastic bill path and the magnetic pinch roller has been eliminated dramatically reducing debris buildup and the need for cleaning
- Security: Fully-encased optical sensors check paper type and the printing on both sides of the bill, while optical cross channel sensors examine the bill path for foreign objects such as clear tape or strings. This bill validator rejects most of the known counterfeits accepted by ordinary bill acceptors - through the use of multiple wavelength optical sensing and sophisticated data processing
- Bezel option "0" allows for drop-in replacement for the VFM4 Upstacker Validator contains both gaming (MEI gaming) and vending (MDB) interfaces
- Flash memory programmable. As more new U.S. bill designs are released, the validator can easily be updated in the field
- Fully accessible bill path
- Lighted bezel with easy-to-read diagnostic lamps
- Easy-to-use dip switch settings and coupon configuration
- Holds rejected bills
- Self-generated jam-clearing function
- Fully contained control box
- Expandable upstacker or downstacker magazine
- Flexible interfacing available to accommodate various vending interfaces and communicate with a coin changer
- Locking hasp available
- Accepts bills in any direction
- 1 Year Warranty

Happ Controls is an authorized MEI Service Center. (See page 222)

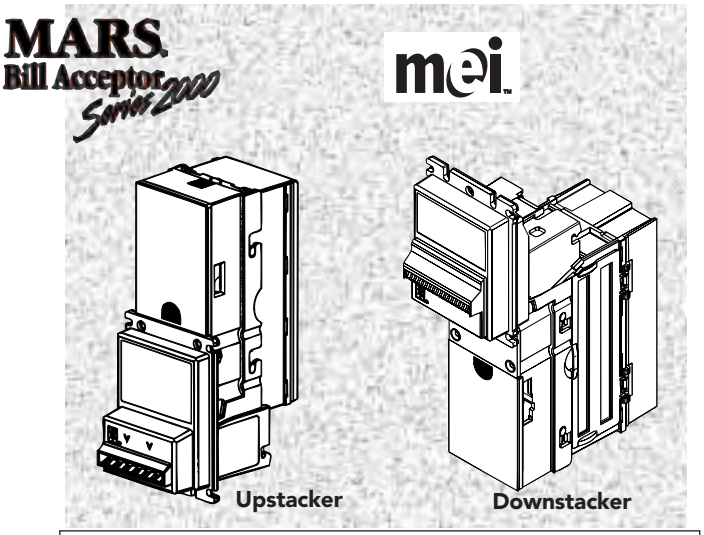

Validator Dimensions AE2600
Downstacker w/VFM5S Bezel

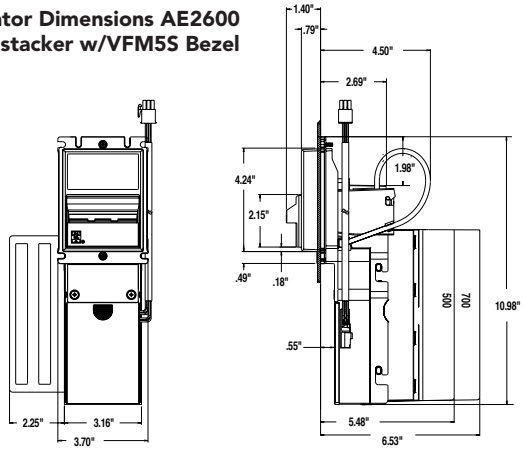

Validator Dimensions AE2600
Upstacker w/Compact Fitted Bezel

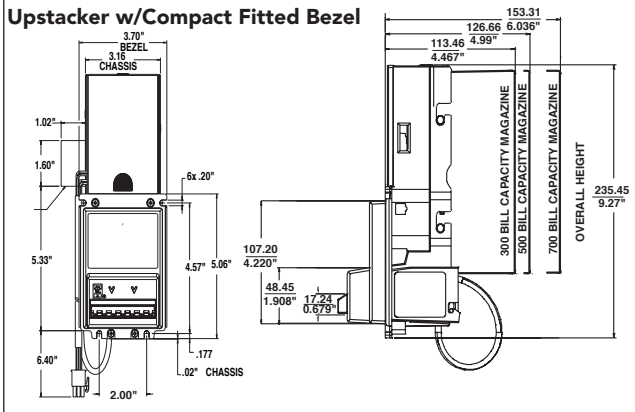

Configuration Key

Amusement and Entertainment

Bezel:
0 = VFM
1 = Compact
3 = VFM5S Downstacker
5 = Compact Fitted

AE 26 X X

Voltage:
1=110 VAC
2= 24 VAC/MBD

Stacker:
U = Upstacker
D = Downstacker

Magazine Size:
2 = 200 bills
3 = 300 bills
5 = 500 bills
7 = 700 bills
10 = 1,000 bills

X X

Custom Configuration:
E= Single Price Harness
M= Includes MDB harness

Bezel Options:

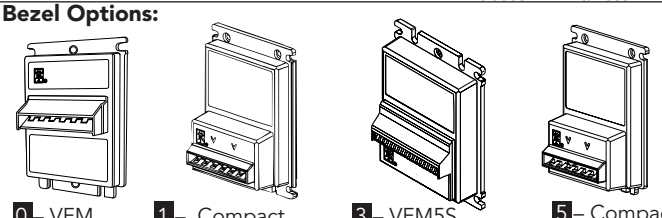

Part Number	Model	To Accept	Bill Capacity	Voltage	Price per ea.
42-7376-00	AE-2601-U3E	$1, $2, $5, $10 & $20	300 Bills	110VAC	496.00
42-7377-00	AE-2601-U5E	$1, $2, $5, $10 & $20	500 Bills	110VAC	510.00
42-7378-00	AE-2601-U7E	$1, $2, $5, $10 & $20	700 Bills	110VAC	524.00
42-7379-00	AE-2602-U5E	$1, $2, $5, $10 & $20	500 Bills	24V	510.00
42-7380-00	AE-2602-U7E	$1, $2, $5, $10 & $20	700 Bills	24V	524.00
42-8160-00	AE-2611-U3E	$1, $2, $5, $10 & $20	300 Bills	110VAC	496.00
42-7310-00	AE-2611-U7E	$1, $2, $5, $10 & $20	700 Bills	110VAC	524.00
42-7312-00	AE-2651-U3E	$1, $2, $5, $10 & $20	300 Bills	110VAC	496.00
42-7311-00	AE-2651-U5E	$1, $2, $5, $10 & $20	500 Bills	110VAC	510.00
42-7382-00	AE-2631-D5E	$1, $2, $5, $10 & $20	500 Bills	110VAC	510.00
42-7383-00	AE-2631-D7E	$1, $2, $5, $10 & $20	700 Bills	110VAC	524.00
42-3427-00	AE-2632-D7E	$1, $2, $5, $10 & $20	700 Bills	110VAC	573.05
42-3663-00	AE-2631-D10E	$1, $2, $5, $10 & $20	1000 Bills	110VAC	583.05

© HAPP CONTROLS

MEI BILL VALIDATORS-AE2800 SERIES

- FEWER HASSLES, MORE TRANSACTIONS Ultra low jam rates and easy acceptance make MEI's AE2800 a user friendly product – one your customers can count on. The unit handles $1, $2, $5, $10, $20, $50 and $100 bills for more transactions, improved customer satisfaction, and higher profits.
- HIGH-END SECURITY & VALUE Multi-wavelength optics and sophisticated data processing combine for exceptional security and value. Fully-encased, optical sensors ensure consistent, high-quality recognition – long a MEI hallmark.
- Due to easy four-way acceptance, customers do not need to flip or turn bulls prior to inserting them. The 2800 series takes torn, wrinkled, faded, and even dirty bills.
- Designed for low maintenance, the 2800's smooth, streamlined bill path has no magnetic pinch rollers to cause debris build-up. Service call for bill jams and vandalism are rare, and the validator signals users that it is operating correctly.
- Convenient access to switches and easy-to-read labels.
- Re-programmable flash memory enables quick, easy updates for software files such as new currency designs or value coupons.
- Acceptance rate: 95% or greater
- Lighted bezel
- Expandable upstacker or downstacker magazine
- 2 year warranty

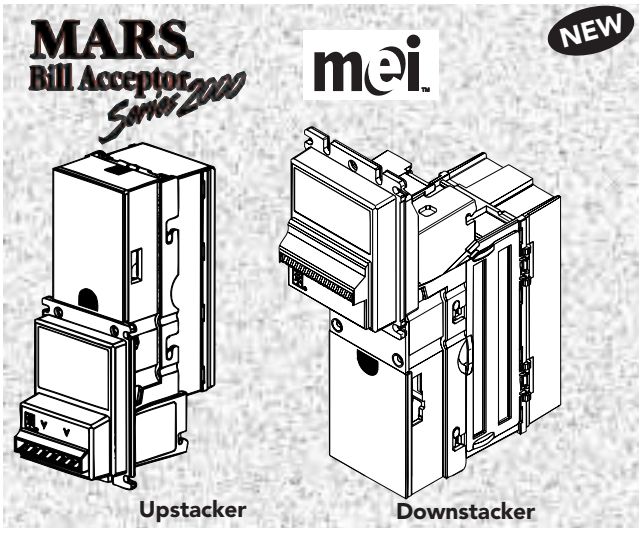

Happ Controls is an authorized MEI Service Center. (See page 222)

Configuration Key

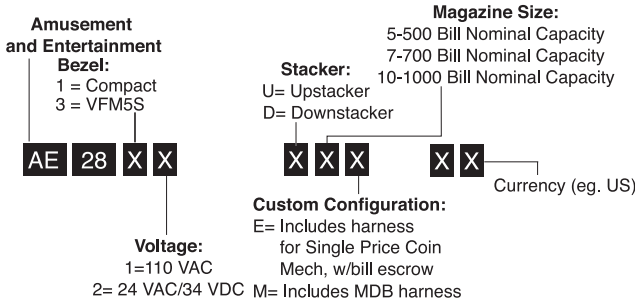

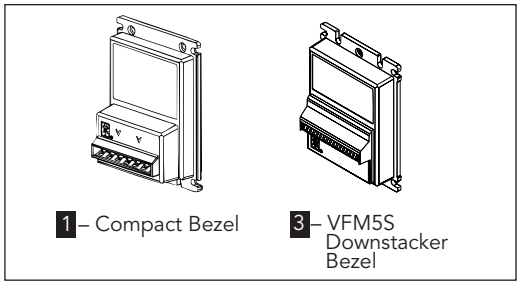

Validator Dimensions AE2800 Downstacker with VFM5S Bezel

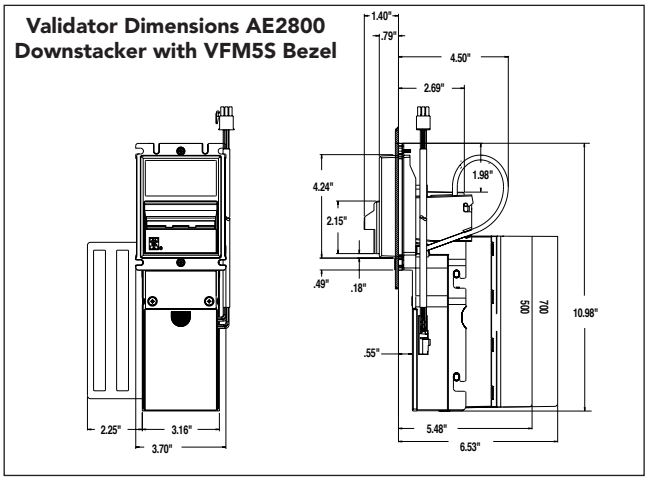

Validator Dimensions AE2800 Upstacker w/Compact Fitted Bezel

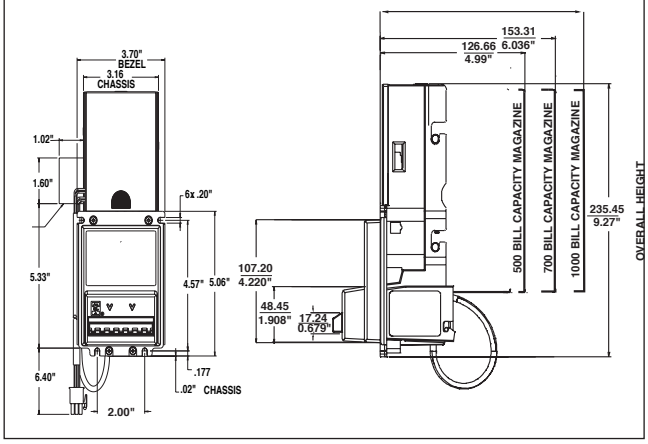

Part Number	Model	To Accept	Bill Capacity	Stacker	Voltage	Price per ea.
42-0261-00	AE2811U5E	$1, $2, $5, $10, $50, $10	500	Up	110V	478.40
42-0260-00	AE2811U10E	$1, $2, $5, $10, $50, $100	1000	Up	110V	494.70
42-0256-00	AE2812U5E	$1, $2, $5, $10, $50, $100	500	Up	24V, MDB	478.40
42-0253-00	AE2812U10	$1, $2, $5, $10, $50, $10	1000	Up	24V, MDB	494.70
42-0248-00	AE2831D5E	$1, $2, $5, $10, $50, $100	500	Down	110V	485.55
42-0667-00	AE2831D7E	$1, $2, $5, $10, $50, $100	700	Down	110V	491.65
42-0246-00	AE2831D10E	$1, $2, $5, $10, $50, $100	1000	Down	110V	501.85
42-0242-00	AE2832D5E	$1, $2, $5, $10, $50, $100	500	Down	24V, MDB	485.55
42-0240-00	AE2832D10E	$1, $2, $5, $10, $50, $100	1000	Down	24V, MDB	501.85
42-3524-00	AE2831D5EBL	$1, $5, $10, $50, $100 Real	500	Down	110V	426.60
42-3523-00	AE2831D7EBL	$1, $5, $10, $50, $100 Real	700	Down	110V	523.95

MEI BILL VALIDATORS-LE SERIES

- Exceptional security, virtually rejects all known counterfeits accepted by most other bill validators- through the use of multiple wavelength optical sensing and sophisticated data processing. Optical cross-channel sensors examine the bill path for foreign objects such as clear tape or strings
- Time saving setup due to convenient access to all labeled switches. A simple-to-use configuration coupon allows you to easily set security and bill acceptance options
- High, four-way acceptance, bills can be fed in any direction face up or down
- Custom LED sensors and an automatic self calibration system provide long maintenance free life of exceptional performance for years to come
- Future flexibility in a flash, all models accept $1, $2, $5, $10, $20, $50, and $100 bills can be easily updated electronically to handle future new currency designs from the U.S. Bureau of Engraving and Printing
- Streamlined recognition system, sensors are embedded under the smooth plastic bill path and the magnetic head and pinch roller have been eliminated to dramatically reduce jams, debris buildup and the need for cleaning
- High acceptance rate, 95% or greater for U.S $1 thru $100 bills
- Fast bill transport speed, approximately 3 seconds (from bill insertion to completed bill-stacking)
- Illuminated bill path and lighted arrows option attracts attention and facilitates ease of use
- Bill Magazines sold separately
- RS232 Module available 42-7347-00
- 1 Year Warranty

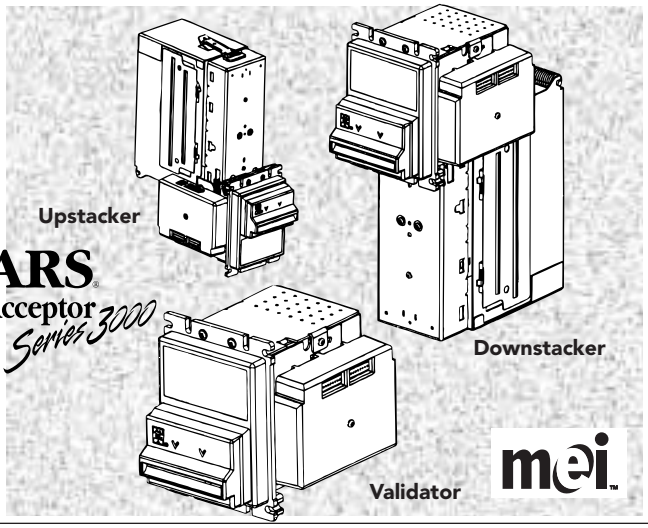

Happ Controls is an authorized MEI Service Center. (See page 222)

Configuration Key

8 = Premium Model with standard magazine capability
9 = Premium Model with LRC capability

Lottery & Entertainment		1 =110 VAC 2 = 24 VAC		L = Left Mount Control Board R = Right Mount Control Board		
LE	3	X	X X	X	X	XX
	Series 3000			U=Upstacker D=Downstacker		Currency Code (e.g. US)

0= Coin Resistant Bezel with Lighted Arrows
1= Coin Resistant Lighted Bezel with Lighted Arrows and Bill Path
2= Straight Feed (GL5 compatible)

Validator Dimensions

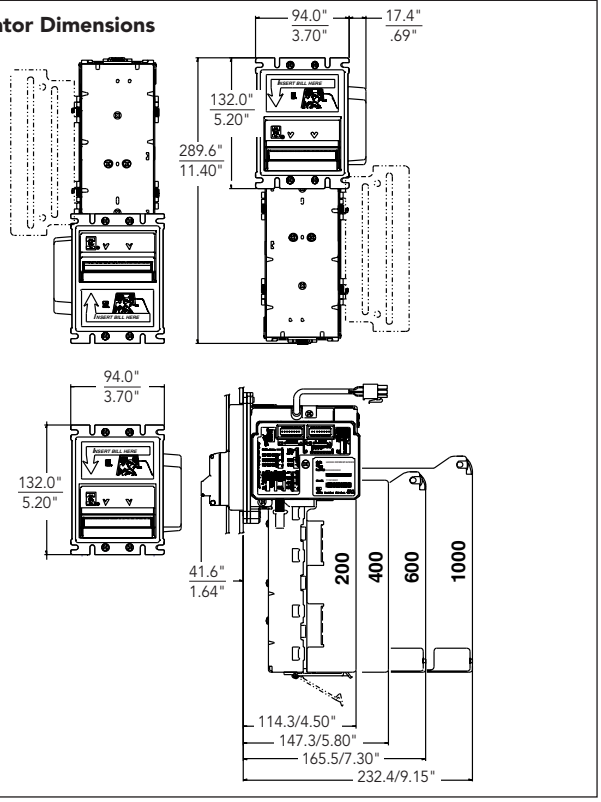

Part Number	Model	To Accept		Bill Capacity	Price per ea.
42-7286-00	LE3811-SR US	$1,$5,$10,$20,$50,$100	110 VAC	Stackerless	486.20
42-7287-00	LE3811-SL US	$1,$5,$10,$20,$50,$100	110 VAC	Stackerless	486.20
42-3291-00	LE3821-SR US	$1,$5,$10,$20,$50,$100	110 VAC	Stackerless	486.20
42-3293-00	LE3821-SL US	$1,$5,$10,$20,$50,$100	110 VAC	Stackerless	486.20
42-7288-00	LE3811-DL US	$1,$5,$10,$20,$50,$100	110 VAC	Sold Sep.	607.80
42-7289-00	LE3811-UL US	$1,$5,$10,$20,$50,$100	110 VAC	Sold Sep.	607.80
42-3295-00	LE3821-DL US	$1,$5,$10,$20,$50,$100	110 VAC	Sold Sep.	607.80
42-3527-00	LE3902-DL-US	$1,$5,$10,$20,$50,$100	24 VAC	Sold Sep.	654.10
42-8135-00	LE3821-UL US	$1,$5,$10,$20,$50,$100	110 VAC	Sold Sep.	578.85
42-7301-00	LE3901-DL US	$1,$5,$10,$20,$50,$100	110 VAC	Sold Sep.	654.10
42-7375-00	LE3901-UL US	$1,$5,$10,$20,$50,$100	110 VAC	Sold Sep.	654.10
208268005	208268005	Bill Magazine for LE3800	-	200 Bills	45.15
208260004	208260004	Bill Magazine for LE3800	-	400 Bills	40.00
208262003	208262003	Bill Magazine for LE3800	-	600 Bills	40.55
208264002	208264002	Bill Magazine for LE3800	-	1000 Bills	52.15
208262008	208262008	Lockable Removable Cassette for LE 3900 Single Lock	-	600 Bills	254.70
111508251	111508251	Lockable Removable Cassette for LE 3900 Single Lock	-	1200 Bills	391.30
208266006	208266006	Lockable Removable Cassette for LE 3900 w/Handle & Locking Hasp	-	600 Bills	335.75

© HAPP CONTROLS

MEI BILL VALIDATORS-VN SERIES

- Advanced sensing technology allows high acceptance rate by accepting torn, wrinkled, faded, damp, dirty, limp, folded or mutilated bills
- Non-contact optical sensors eliminate pinch rollers offering a smooth bill path that reduces jams
- Low Maintenance: Streamlined recognition system sensors are embedded under the smooth plastic bill path and the magnetic pinch roller has been eliminated dramatically reducing debris buildup and the need for cleaning
- Security: Fully-encased optical sensors check paper type and the printing on both sides of the bill, while optical cross channel sensors examine the bill path for foreign objects such as clear tape or strings. This bill validator rejects most of the known counterfeits accepted by ordinary bill acceptors - through the use of multiple wavelength optical sensing and sophisticated data processing
- Fully accessible bill path
- Lighted bezel with easy-to-read diagnostic lamps
- Easy-to-use dip switch settings and coupon configuration
- Holds rejected bills
- Self-generated jam-clearing function
- Flexible interfacing available to accommodate various vending interfaces and communicate with a coin changer
- Fully contained control box
- Expandable upstacker magazine
- Locking hasp available
- Accepts bills in any direction
- 2 Year Warranty

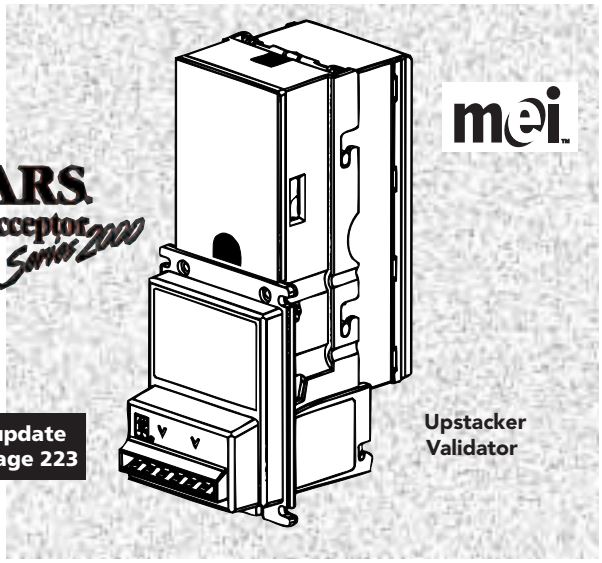

Upstacker Validator

For NexGen $20 update information see page 223

Validator Dimensions
VN2500 Upstacker w/Compact Bezel

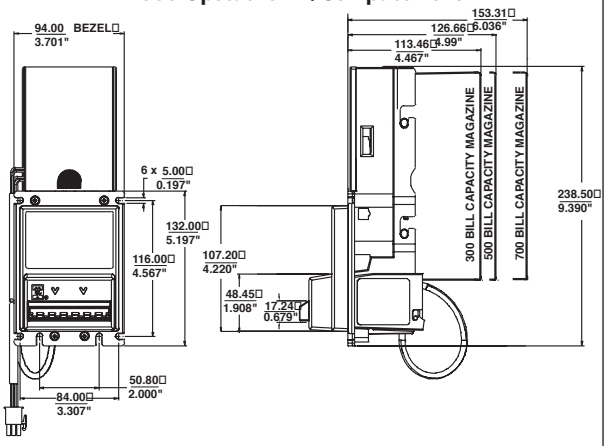

Bezel Options:

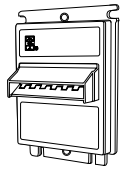

0 – VFM Bezel

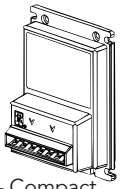

1 – Compact Bezel

Configuration Key

Vending: VN 23 or 25

Bezel:
0 = VFM
1 = Compact
2 = Flush-Mount

Voltage:
1=110 VAC
2= 24 VAC/MDB

Magazine Size:
2 = 200 bills
3 = 300 bills
5 = 500 bills
7 = 700 bills

U X X

Custom Configuration:
E= Includes harness for Single Price Coin Mech, w/bill escrow
M= Includes MDB harness

Part Number	Model	To Accept	Bill Capacity	Voltage	Price per ea.
42-3255-00	VN-2312-U3M	$1, $2	300 Bills	24VAC	404.00
42-1342-00	VN-2501-U2E	$1, $2 & $5	200 Bills	110VAC	429.00
42-1343-00	VN-2501-U3E	$1, $2 & $5	300 Bills	110VAC	429.00
42-1344-00	VN-2501-U5E	$1, $2 & $5	500 Bills	110VAC	439.00
42-3127-00	VN-2501-U7E	$1, $2 & $5	700 Bills	110VAC	445.00
42-3254-00	VN-2502-U2E	$1, $2 & $5	200 Bills	24VAC	424.00
42-3253-00	VN-2502-U2M	$1, $2 & $5	200 Bills	24VAC	424.00
42-3252-00	VN-2502-U3E	$1, $2 & $5	300 Bills	24VAC	424.00
42-3251-00	VN-2502-U3M	$1, $2 & $5	300 Bills	24VAC	434.00
42-3250-00	VN-2502-U5E	$1, $2 & $5	500 Bills	24VAC	449.00
42-3249-00	VN-2502-U7E	$1, $2 & $5	700 Bills	24VAC	424.00
42-2007-00	VN-2511-U2E	$1, $2 & $5	200 Bills	110VAC	424.00
42-2036-00	VN-2511-U3E	$1, $2 & $5	300 Bills	110VAC	434.00
42-3248-00	VN-2511-U5E	$1, $2 & $5	500 Bills	110VAC	419.00
42-7230-00	VN-2511-U7E	$1, $2 & $5	700 Bills	110VAC	714.95
42-3247-00	VN-2512-U2M	$1, $2 & $5	200 Bills	24VAC	429.00
42-3246-00	VN-2512-U3M	$1, $2 & $5	300 Bills	24VAC	429.00
42-3245-00	VN-2512-U5E	$1, $2 & $5	500 Bills	24VAC	429.00
42-3244-00	VN-2512-U5M	$1, $2 & $5	500 Bills	24VAC	429.00
42-3698-00	VN-2512-U7E	$1, $2 & $5	700 Bills	24VAC	438.00
42-3243-00	VN-2521-U2E	$1, $2 & $5	200 Bills	110VAC	419.00
42-3242-00	VN-2521-U3E	$1, $2 & $5	300 Bills	110VAC	429.00
42-3241-00	VN-2521-U5E	$1, $2 & $5	500 Bills	110VAC	439.00
42-3240-00	VN-2522-U3E	$1, $2 & $5	300 Bills	24VAC	434.00
42-3239-00	VN-2522-U3M	$1, $2 & $5	500 Bills	24VAC	434.00

MEI BILL VALIDATORS-ACCESSORIES

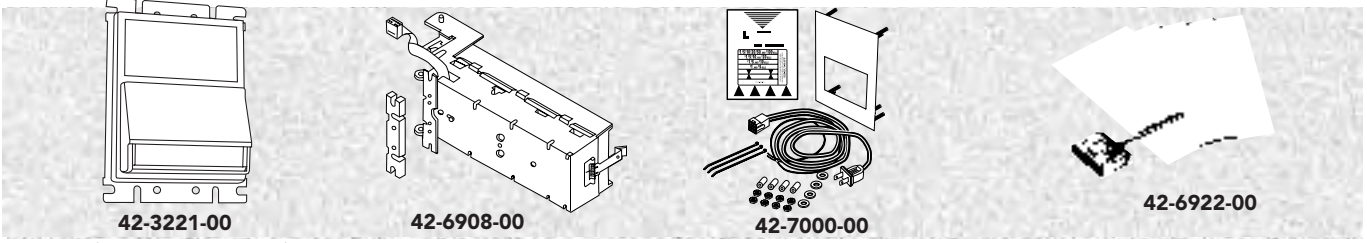

Part Number	MEI Part Number	Description	Price per ea.
AL, GL & VFM Series Accessories			
42-8063-00	-	Magnetic Head for AL, GL & VFM	61.90
42-1093-00	-	VFM Conversion Kit - Moves black control box from either left or right side of validator to top of validator	9.70
42-7000-00	-	Happ Mounting Kit for MEI AL, GL, LE (Stackerless, Upstacker & Downstacker) and Series 2000 Downstacker with VFM5S Downstacker Bezel (Bezel Option #3)	20.85
01-12-192	01-12-192	MEI AC cable assembly 110v for AL, GL, LE & VFM Validators	23.15
42-7064-00	04-04-080	Worm gear for VFM	2.25
42-7304-00	09-02-018	Drive Shaft Assembly for VFM	9.30
42-7096-00	110848001	Metal bezel bracket for GL5	4.20
42-6909-00	111501062	MEI Downstacker Kit for VFM3S & VFM5S	81.10
111504052	111504052	Stacker motor for VFM4	49.55
111510329	111510329	MEI drive tire assembly wheel and tire for VFM, AL & GL	3.35
111599031P	111599031P	VFM5S Dowmstacker Bezel, Set of two	14.65
42-3221-00	111512328	MEI Coin Resistant Bezel for AL & GL Validators	13.95
42-1368-00	111519198	Drive Pulley Assembly (2 Required per validator) and Magazine size of choice	3.20
42-6902-00	111583002	MEI Gold Validator Label for AL4 & GL5 Validators	2.40
42-6903-00	111583023	MEI Yellow Validator Label for AL4 Validators	2.10
111583024	111583024	Yellow Label Set for GL5 Includes 4 Labels	1.65
111589043	111589043	MEI Yellow Label for AL4 Plus	1.45
42-7098-00	111594008	Bezel spacer, black plastic for GL5	2.15
111607168	111607168	1,000 Bill Capacity Magazine for AL & GL Up or Downstacker Validators	46.35
42-0981-00	111631010	Locking Clamp for AL & GL 1000 Bill Magazine	40.55
42-6978-00	111631054	Preamp credit pcb for GL5	208.40
42-6908-00	111632109	MEI Downstacker Kit for GL5 Validators (Requires 42-1368-00 drive pulley assembly (2 required per validator) and magazine size of choice	104.25
42-7049-00	111633053	Preamp Optics for GL5	121.60
111635030	111635030	200 Bill Capacity Magazine for AL & GL Downstacker Validators	38.85
42-7084-00	111635138	Anti-Cheat Clip Tooth Bracket	58.75
42-6922-00	111636021	Calibration Kit for AL4, GL5 & LE Validators	16.25
42-7097-00	111636107	Cross Channel Sensor board for GL5	208.40
42-7083-00	111636124	Preamp optic board for GL5	110.00
42-7095-00	111637034	Power Supply Board for GL5	185.25
42-7099-00	111638081	Standard PCB for GL5	156.30
42-7065-00	111639033	Control board for GL5	364.70
42-7082-00	111639077	Upstacker LED credit board for GL5	98.40
42-3102-00	112511003	Ribbon Cable - 10 Circuit	8.80
42-7106-00	112512011	Cable Assembly for GL5	13.95
42-3101-00	112513002	Ribbon Cable - 12 Circuit	9.55
42-0717-00	112793001	MEI Mounting Kit VFM2/4, AL4 & GL5	25.55
112866001	112866001	MEI power transformer for GL5	40.50
42-7079-00	11634125	Optic PCB for GL5 & AL4 (Replaces 11637056)	50.95
208262003	208262003	600 Bill Capacity Magazine for AL & GL Up or Downstacker Validators	40.55
250020100	250020100	MEI Adapter, VFM Bezel	4.60
250038030	25038030	Mounting Plate	2.05
LE Series Accessories			
42-7518-00	-	Lighted Bezel for LE Series	11.55
42-7000-00	-	Happ Mounting Kit for MEI AL, GL, LE (Stackerless, Upstacker & Downstacker) and Series 2000 Downstacker with VFM5S Downstacker Bezel (Bezel Option #3).	20.85
01-12-192	01-12-192	MEI AC cable assembly 110v for AL, GL, LE & VFM Validators	23.15
42-7347-00	111633139	RS232 Module Kit for LE Series	17.40
42-7330-01	111635150	Cable Only for LE Series Level Converter	81.10
42-6922-00	111636021	Calibration Kit for AL4, GL5 & LE Validators	16.25

© HAPP CONTROLS

MEI BILL VALIDATORS-ACCESSORIES (CONT.)

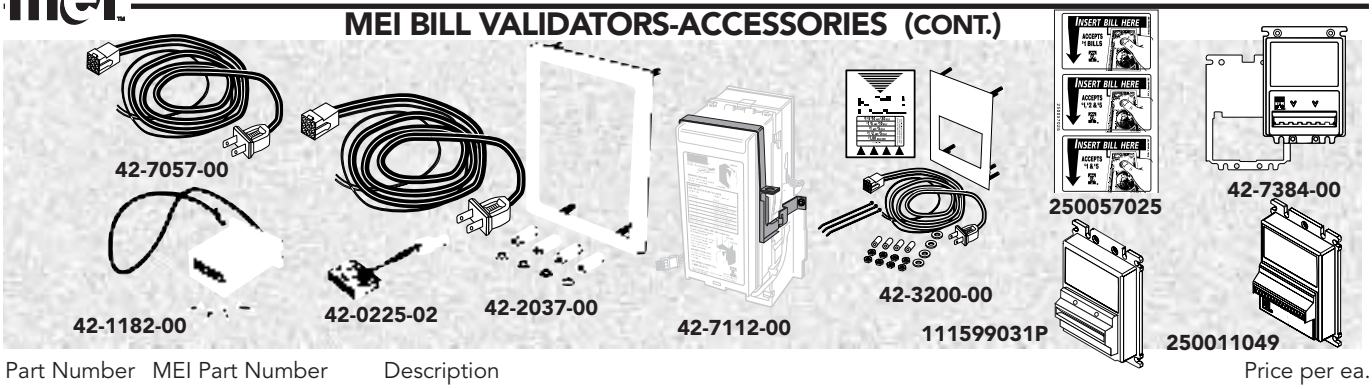

Part Number	MEI Part Number	Description	Price per ea.
LE Series Accessories Cont.			
208260004	208260004	400 Bill Capacity Magazine for LE3800 Validators	40.00
208262003	208262003	600 Bill Capacity Magazine for LE3800 Validators	40.55
208264002	208264002	1,000 Bill Capacity Magazine for LE3800 Validators	52.15
208266006	208266006	600 Bill Capacity LRC Magazine for LE3900 Validators (Locks Sold Sep.)	335.75
208268005	208268005	200 Bill Capacity Magazine for LE3800 Validators	45.15
AE & VN Series Accessories			
42-7384-00	-	Bezel Modification Kit for Series 2000 Validator to allow Validator to fit intoHapp Controls Validator Door	17.40
42-7112-00	-	Happ metal locking hasp for MEI AE & VN Series 2000 with Compact Bezel (Bezel option Number 1) or Fitted Bezel (Bezel option 5)	29.15
42-3200-00	-	Mounting Kit for MEI Series 2000 Upstacker with either Compact Bezel (Bezel Option #1) or Compact Fitted Bezel (Bezel opton #5)	20.85
250011049	250011049	Bezel Assy For Down Stacker	8.40
250021015	250021015	Timing Belt, Large for MEI Series 2000	5.55
250023014	250023014	Timing Belt, Small for MEI Series 2000	2.25
250025018	250025018	Blue Magazine Clip for MEI Series 2000 Magazines	.82
250044003	250044003	Spring for Blue Magazine Clip for MEI Series 2000 Magazine	.20
250055026	250055026	Label Set for VN Series Validators	.98
250057025	250057025	MEI Yellow Label Set $1, $2, $5 for VN2000 Series	.59
250059046P	250059046P	Label Set for AE 2600 Validators	.98
250060042	250060042	500 Bill Magazine for AE Downstacker Validators	47.25
250-061-016	250061016	300 Bill Capacity Magazine for AE & VN Upstacker Validators	25.55
250-063-015	250063015	200 Bill Capacity Magazine for AE & VN Upstacker Validators	25.55
250064028	250064028	Stacker Motor For 2000 Series	17.80
250064084	250064084	500 Bill Magazine Downstacker Enhanced Version	40.55
250066083	250066083	500 Bill Magazine Upstacker Enhanced Version	40.55
42-3297-00	250066027	MEI Blue Plastic Locking Hasp Kit for Series 2000 VN & AE Magazine (2 Per Box)	49.00
250-068-021	250068021	700 Bill Capacity Magazine for AE & VN Upstacker Validators	49.99
250068043	250068043	700 Bill Magazine for AE Downstacker Validators	49.99
250062068	250062068	700 Bill Magazine For AE Enhanced Version with Hook Plate	49.99
250-069-017	250069017	500 Bill Capacity Magazine for AE & VN Upstacker Validators	40.55
42-3141-00	250070006	MEI Power Harness for Series 2000 Validators	17.40
42-7224-00	250071009	MDB Harness, 24v for VN23 & VN 25 Validators	23.10
42-3391-00	250079049	RS232 Interface Cable for AE 2600 Series	52.45
250067013	250067013	MEI Bezel Kit For Series 2000	20.95
250068009	280068009	Happ pulse meter kit for MEI Series 2000 (Models with 110v Only)	24.15
Other Miscellaneous Accessories			
42-7057-00	01-12-139	MEI Harness, 2 Wire Line Cord & Credits with Plug	9.70
42-0225-02	01-12-148	MEI Harness, 2 Wire Line Card with Plug + Inhibit Plug	18.15
42-7303-00	04-02-020	Gear Helical for stacker motor for LO Series	1.80
42-3134-00	112511042	MEI Harnesses, 110 v	46.35
42-2037-00	91-16-159-4	MEI Mounting Plate Kit for Metal Door	23.15
42-3433-00	04-04-056	MEI Pressure Plate	4.60
42-3434-00	111596144P	Bottum Tab For Metal Magazines	28.35
42-1182-00	91-16-279-4	Pulse Meter Kit for MEI VFM, AL, GL and LE Validators	47.00
42-8064-00	111595072	LED Housing	8.10
42-8065-00	111599139	Optic Housing	8.10
111630127	111630127	Motor Gearbox Assy.	30.15
111633215P	111633215P	Hook PLate Kit for Series 3000 LE, GL, AL	27.30
111599031P	111599031P	Bezel for VFM5S	14.65

MEI 1000 BILL CAPACITY MAGAZINE

- Holds 1,000 bills
- Fits Series 2000 Validators
- Bill access doors on both sides of magazine
- Made of durable high impact plastic
- New anti-stringing cutter installed
- Depth: 6-11/16"

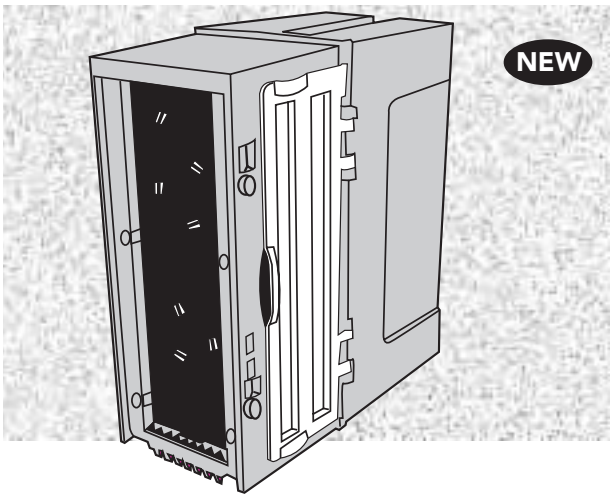

Part Number		Price per ea.
250060086	MEI 1,000 Bill Capacity Magazine	59.99

ROWE CHANGER COIN ENTRY BLOCK OUT PLATE

- Easy & clean way to eliminate coin acceptance within Rowe BC20, BC25 and BC35 changers
- Installs using existing hardware within changer
- Clear zinc finish provides nice finished look
- Made in USA

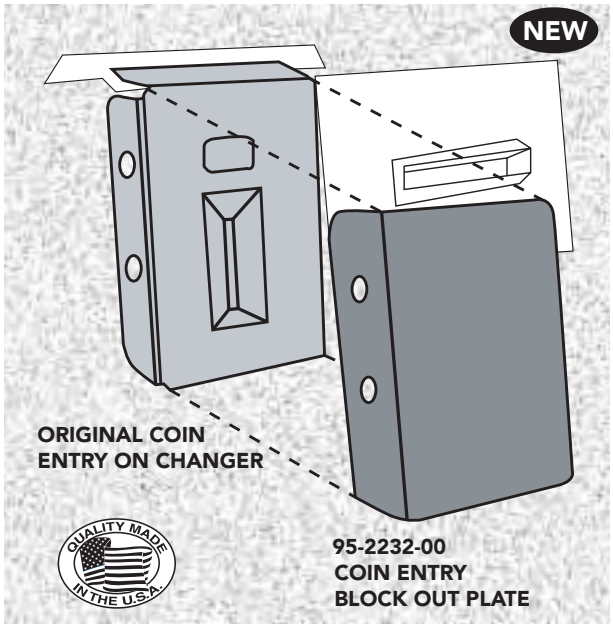

Part Number		Price per ea.
95-2232-00	Rowe Changer Coin Entry Block Out Plate	9.20

DO YOU WANT TO KNOW EACH TIME YOUR ORDER SHIPS OUT?

e-mail notification and order **tracking information** is now available from Happ Controls! Contact your sales representative or e-mail our customer service department at: **info@happcontrols.com** with your account information.

MEI BILL VALIDATOR UPGRADE KITS FOR ROWE® JUKEBOXES

- Upgrade your Rowe jukebox to accept a reliable MEI Series 2000 Bill Validator
- Reduce service calls and save time and money
- MEI validator will easily update to the new $5 bill via EPROM change
- "Clean and Easy" installation without any "Splicing" of wires
- No reprogramming of jukebox required
- Installation time approximately 30 minutes
- Accepts $1, $2, & $5 bills
- Kits come complete with the following items:
  - MEI AE-2411-U7E validator (700 bill capacity upstacker)
  - Custom Wire Harness
  - Mounting Hardware
  - Instructions

Note: Wall Mount jukeboxes require Wall Mount Power Adapter Harness (42-7460-10) Sold Separately

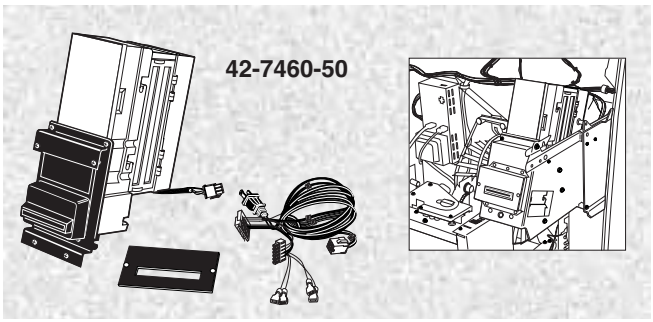

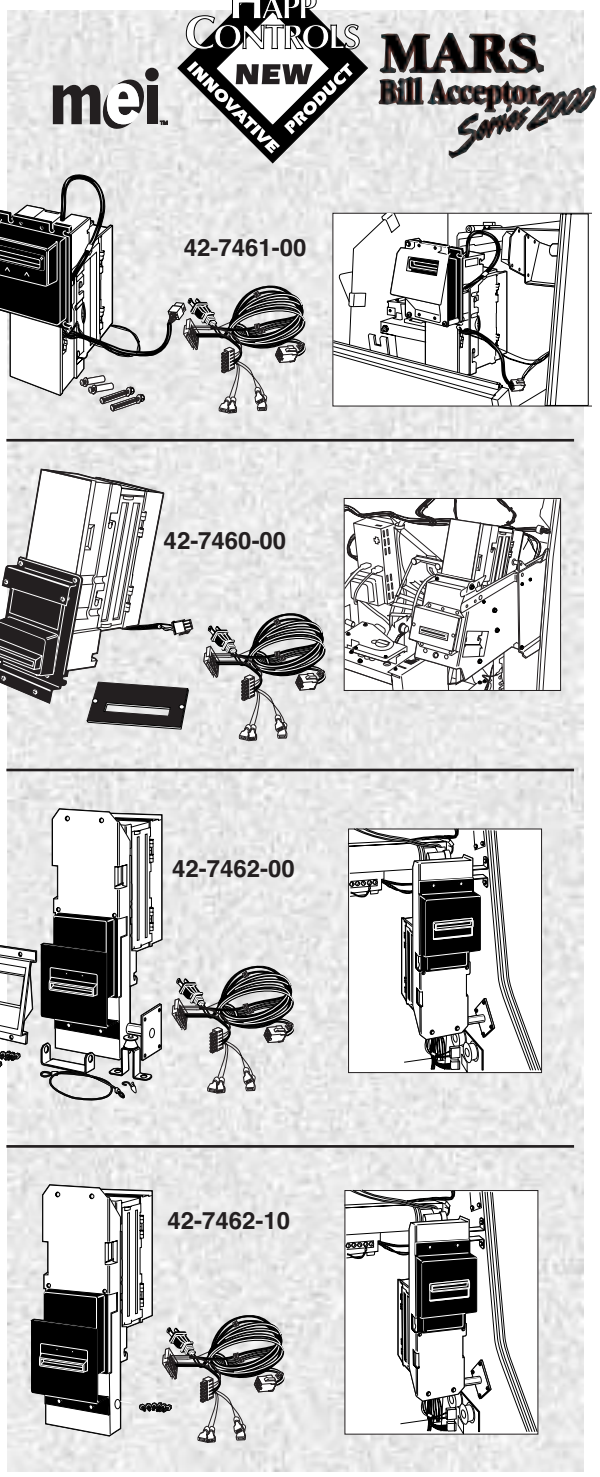

Part Number		Price per ea.
42-7461-00	For OBA Validators, Jukebox Rowe® 100, 100A and 100B	438.75
42-7460-00	For CBA2 Validators, Rowe® Jukebox 100C, D, E, F, MM3*, Encore*, Storm*, Berkley*, Sunset*	461.90
42-7460-50	For CBA2 Validators, Rowe Wallbox Models WP100, Berkeley, Sunrise, & Storm	395.00
42-7462-00	For RBA7 Validators, Rowe® Jukebox 100G and 100H- equipped without a Bill Validator	519.80
42-7462-10	For Rowe Jukebox 100G & 100H to replace existing RBA 7 Validator	439.90
42-7460-10	Wall Mount Power Adapter Harness	17.35

*Wall Mount jukeboxes require Wall Mount Power Adapter Harness (42-7460-10) Sold Separately

BILL CHANGER UPGRADE KITS

- Upgrade your old bill changers to accept either $1 - $5, or $1 - $20 bills
- The validator mounts directly to the original track where the transport has been replaced, not to the door that swings out. Therefore, clearance is no problem with the validator
- Complete kit comes with a MEI Series 2000 validator with 700 bill upstacker
- MEI validators have been updated to accept the new $5, $10 and $20 bills
- MEI validators allow a high acceptance of all bills
- Can be directly replaced with any MEI VN-2501, AE-2411 of AE-2600 validator
- Changer is still able to accept coins
- Takes about 30 minutes to install

Part Number	Bill Changer	Will Accept	Description	Price per ea.
42-3464-00	Ardac 5000	$1 - $5	Kit w/o Validator	226.85
42-3324-00	National Changertron 2/4 and Hamilton	$1 - $20	Kit w/o Validator	219.40
42-7465-00	Rowe BC1	$1 - $20	Kit w/o Validator	226.85
42-7464-00	Rowe BC9	$1 - $20	Kit w/o Validator	476.95
42-7350-00	Rowe BC11	$1 - $5	Kit w/o Validator	204.80
42-8195-00	Rowe BC11	$1 - $20	Kit w/o Validator	268.45
42-7351-00	Rowe BC12	$1 - $5	Kit w/o Validator	204.80
42-8196-00	Rowe BC12	$1 - $20	Kit w/o Validator	268.45
42-7352-00	Rowe BC20/25/25MC	$1 - $5	Kit w/o Validator	204.80
42-8192-00	Rowe BC20/25/25MC	$1 - $20	Kit w/o Validator	257.95
42-8090-00	Rowe BC35	$1 - $5	Kit w/o Validator	204.80
42-8197-00	Rowe BC35	$1 - $20	Kit w/o Validator	257.95
42-8188-00	Rowe BC3500	$1 - $20	Kit w/o Validator	531.15
42-3346-00	Rowe BC100	$1 - $20	Kit w/o Validator	339.55
42-3355-00	Rowe BC1200	$1 - $5	Kit w/o Validator	228.30
42-3503-00	Rowe BC1200	$1 - $20	Kit w/o Validator	268.45
42-3347-00	Rowe SBC2/4	$1 - $20	Kit w/o Validator	326.30
42-7465-700	Rowe BC1	$1 - $20	Kit w/ Validator	671.40
42-7464-700	Rowe BC9	$1 - $20	Kit w/ Validator	926.05
42-7350-700	Rowe BC11	$1 - $5	Kit w/ Validator	561.45
42-8195-700	Rowe BC11	$1 - $20	Kit w/ Validator	716.60
42-7351-700	Rowe BC12	$1 - $5	Kit w/ Validator	561.45
42-8196-700	Rowe BC12	$1 - $20	Kit w/ Validator	716.60
42-7352-700	Rowe BC20/25/25MC	$1 - $5	Kit w/ Validator	561.45
42-8192-700	Rowe BC20/25/25MC	$1 - $20	Kit w/ Validator	716.60
42-8090-700	Rowe BC35	$1 - $5	Kit w/ Validator	561.45
42-8197-700	Rowe BC35	$1 - $20	Kit w/ Validator	716.60

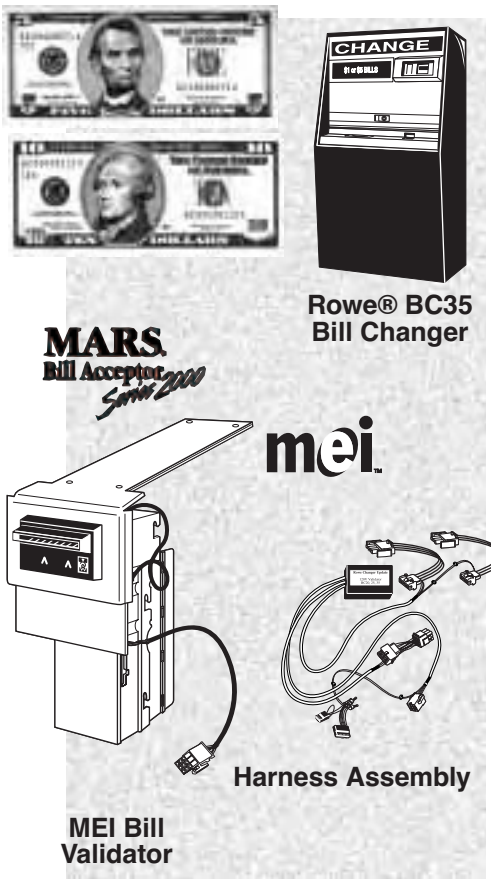

ROWE® BILL CHANGER OVERLAYS

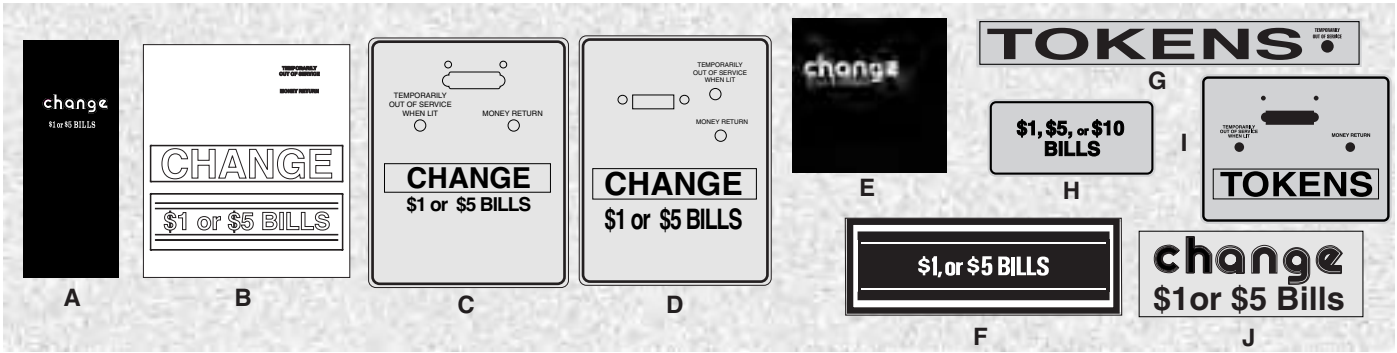

Ref.	Part Number		Price per ea.
A	H1715R	BC11/12 $1 & $5 Overlay - Black	18.15
B	H170R	BC11 $1 & $5 White on Clear	12.05
C	H166R	BC12 $1 & $5 Instruction Decal	19.30
D	H167R	BC12 $1 & $5 Instruction Decal	19.30
E	H1693R	BC8/9/20 $1 & $5 Overlay	21.70
F	H35074331R	BC35 Change Decal	10.90
G	27-1324-00	BC1200 "Tokens" Decal	32.75
H	27-1325-00	BC1200 $1, $5 or $10 Bill Overlay	15.30
I	27-1326-00	BC1200 "Tokens" Overlay	15.30
J	H35074329R	$1 & $5 Change Decal	14.50
-	49-0474-00	Black Pica Vinyl, 40" wide (Matches A & E Overlays)	5.00 ft. 4.20 ft. L/150

NOTE: If you are looking for a blockout plate for currency see page 236

 © HAPP CONTROLS

RS232 BILL VALIDATOR SOLUTIONS

RS232 BILL VALIDATOR INTEGRATION DEVELOPERS KIT

- A complete hardware and software system to connect a MEI Serial Compatible (NISR) bill validator to a PC serial port
- Software DLL for Windows 9x/NT4.0 makes interfacing to a bill validator quick and easy. NISR DLL handles all low-level communications with the bill validator, removing the programmer from the intricate details of the communication protocol. This allows the programmer to focus on application development rather than communications, speeding time to market. Utilizes the industry standard MEI Serial (NISR) communication protocol.
- Allows all bill validator functions to be accessed by your application, including bill validator enable/disable, bill accept/reject, and denomination enable/disable. NISR DLL also supports all bill validator fault codes and is compatible with both C and Visual Basic programming languages.
- The hardware interface board is small, quick to install, and requires no tools. Simply plug the board into the bill validator, connect the cable to the interface board and PC and installation is complete. The interface is powered directly by the bill validator, so no external power supply is needed
- NISR DLL supports MEI AE2600, LE3000, and GL Series bill validators with the MEI Serial protocol. Support for MEI VN2500, LE3000, GL, and CashCode 1100 and HRT models coming soon
- Hardware supports MEI AE2600 and CashCode 1100 UNV and HRT model bill validators, with MEI LE3000/GL styles coming soon
- Kit includes:
  - 3-1/2" Floppy disk containing application and source code
  - Bill Validator hardware interface board
  - Serial cable
  - Manual

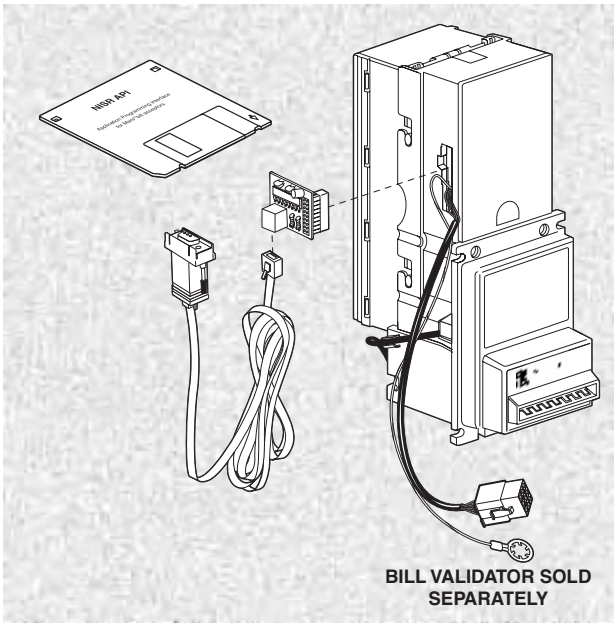

Part Number		Price per ea.
42-7502-00	RS232 Bill Validator Integration Developers Kit	656.25

RS232 BILL VALIDATOR HARDWARE INTERFACE BOARD

- For use once RS232 bill validator developers kit (42-7502-00) is implemented into application software on computer
- The hardware interface board is small, quick to install, and requires no tools. Simply plug the board into the bill acceptor, connect the cable to the interface board and PC and installation is complete. The interface is powered directly by the bill acceptor, so no external power supply is needed
- Contains both bill validator hardware interface board and serial cable

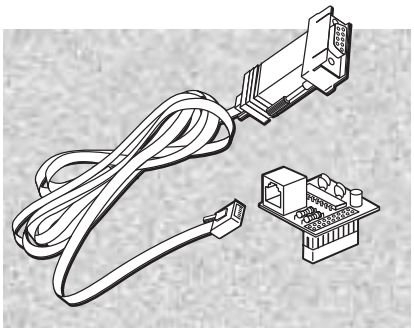

Part Number		For Use With	Price per ea.
42-7502-10	Bill Validator Hardware Interface Board	MEI AE2600 Series and CashCode 1100 UNV and HRT Series	40.55

CASHCODE BACKLOAD SM BILL VALIDATOR

CashCode Company, Inc. manufactures the most reliable, durable, secure and technologically advanced bill validators for the Amusement industry. Designed for both domestic and international currency validation, CashCode has a bill Validator that is just right for your application. Buy a CashCode today and feel confident that your money is safe and sound.

- Fixed-width bill validation (67mm or 71mm wide)
- Installation in an up or down stacking configuration
- Advanced optical, inductive and dielectric sensors for optimal validation rates, and maximum counterfeit detection
- Auto-tuning and auto-calibrating sensors which require no calibration papers
- Secure lockable-removable cassettes available in 400, 600, 1000 and 1500 bill capacities
- Anti-stringing design with cross-channel sensors to prevent bill pull-back
- Dual entry sensors and patented non-contact sensors with no-pinch rollers, reduce the likelihood of jamming
- Tool-free, one-step, easy service access with CashCode's patented "clamshell" design
- Beltless transport system with patented roller-based design, for improved performance and lower maintenance costs
- Switch selectable denomination and interface (pulse, serial or bi-directional interfaces available with TTL or RS232)
- Flash memory with Smart Stick for quick and easy currency updates
- Optional metal bezel is coin, vandal and moisture resistant. Available is upstacker or downstacker configuration
- MTBF 750,000 cycles
- 36" harness with flying leads included
- Decal included
- Locks available, sold separately (30-2223-HXX)
- One year warranty
- Built-in 12-point self-diagnostic with front LED to quickly pinpoint errors, and eliminate any guesswork
- Four-way bill validation for ease of customer bill insertion
- 96% or greater bill validation of street grade bills on first insertion: 99% on second attempt
- Modular design, for quick and easy interchangeability of parts
- Stacker and cassette fit together to form one modular unit
- International models available (please inquire for available countries)
- Stackers sold separately

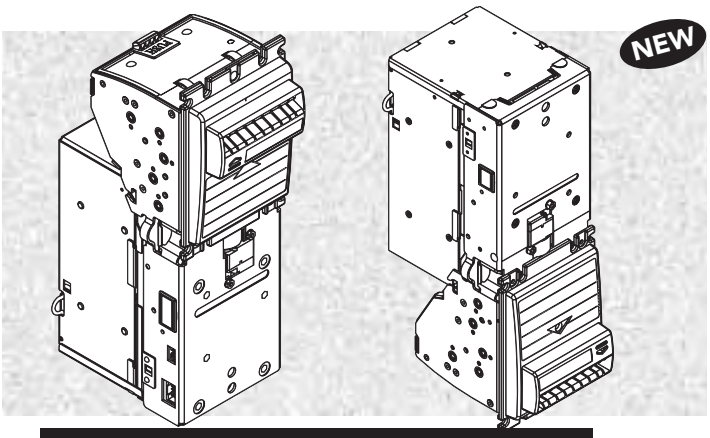

HAPP CONTROLS
IS NOW AN AUTHORIZED
CashCode® **SERVICE CENTER**
See page 222 for details

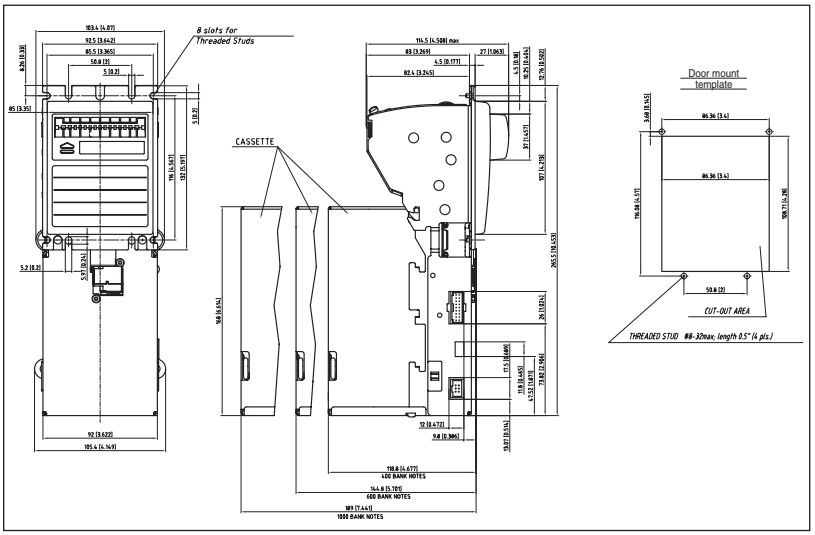

Part Number	CashCode Number	To Accept	Price per ea.
42-0302-00	SM2005US1718	$1,$5,$10,$20,$50,$100	540.60

Part Number	Description	Width	Capacity	CashCode #	Price per ea.
42-0301-00	Lockable Removable Cassette (LRC)	67mm	1500	CST-1K567-POL-S	185.65

Part Number	Description	Price per ea.
42-0742-00	Chrome Metal "Coin-Proof" Motorized Bezel	96.90

LOCKABLE REMOVABLE CASSETTES (LRC)

LRC pictured with locks (Locks sold separately)

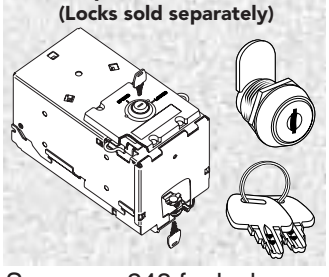

See page 243 for locks

Part Number		Width	Capacity	Cash Code #	Price per ea.
42-6958-00	Lockable Removable Cassette (LRC)	67mm	400 Bills	CST400-67	91.50
42-6959-00	Lockable Removable Cassette (LRC)	67mm	600 Bills	CST600-67	103.10
42-6960-00	Lockable Removable Cassette (LRC)	67mm	1,000 Bills	CST1K067-COL	115.80
42-0301-00	Lockable Removable Cassette (LRC)	67 mm	1,500 Bills	CST1K567-POC-S	185.65
42-8094-00	Gaming LRC	67mm	600 Bills	CST-600-67-GOL	172.55
42-6998-00	Lockable Removable Cassette (LRC)	71mm	400 Bills	AMZCST400-71	86.85
42-3289-00	Lockable Removable Cassette (LRC)	71mm	600 Bills	AMZCST600-71	108.85
42-3231-00	Lockable Removable Cassette (LRC)(CAN)	71mm	1,000 Bills	AMZ-CND-VAULT-1000	127.40
42-2046-00	Lock Mounting Kit to prevent removal of stacker from acceptor			AMZUSA-CC001	24.35

Note: 67mm Width bills for USA Currency, 71mm Width bills for Canada Currency

© HAPP CONTROLS

BILL VALIDATORS

CashCode manufactures the most reliable, accurate and serviceable bill validators in today's global market. Designed for domestic and international currency validation. CashCode's Amazing Series Bill Validators feature the latest advances in bill validation technology.

Standard Features:

- 12-Point Self Diagnostic front color LED - Takes the guess work out of why a validator is not functioning - checks for user failure or mechanical failure
- Patented Non-Contact magnetic sensing - No pinch rollers - Reduces the likelihood of jamming
- Patented design incorporates multiple optical and magnetic sensors. Scans both sides of the bill simultaneously, maximizing detection of counterfeit bills
- Maintains magnetic sensor recognition system in non-magnetic currency validators for maximum security
- Patented Clam Shell design allows easy access to bill path, one push and it's open, no tools required
- Auto tuning and calibration on every bill insertion
- Stacker and cassette designed into one LRC (Lockable, Removable Cassette)
- Anti stringing protection
- Four way bill acceptance (all models) maximum acceptance rate of street grade bills: 96% on first insertion and 99% on second attempt
- Serial, Pulse and RS232 interfaces available
- Interfaces and denominations switch selectable
- Software socketed EPROM
- Maximum time between servicing, validator mean time between failures 1.2 million cycles and LRC mean time between failures 2 million cycles
- 36 harness with flying leads included
- Decal included
- Locks available
- One year warranty
- International models available: Brazil, Canada, Colombia Chile, Mexico, Venezuela
  Please inquire for additional countries

CashCode® UNV BACKLOAD BILL VALIDATORS

- Standard features list above plus:
- **New Universal (UNV)** Streamline design can be used in either upstacker or downstacker configurations.

HAPP CONTROLS IS NOW AN AUTHORIZED CashCode® SERVICE CENTER
See page 222 for details

EPROM UPDATE FOR NEW $5 AND $10

See page 135

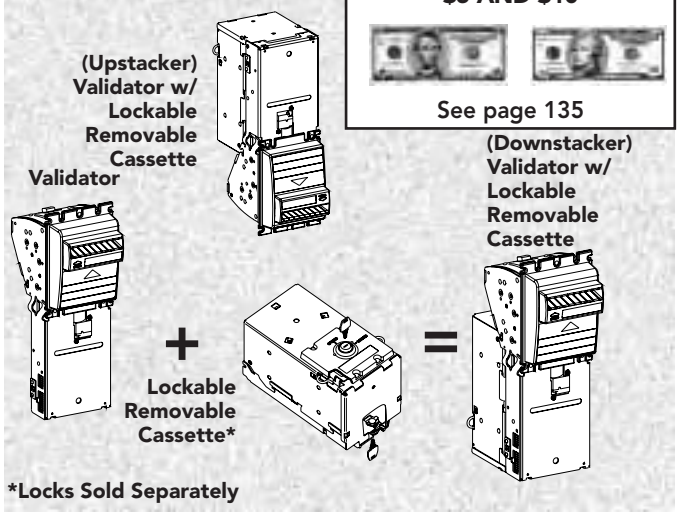

*Locks Sold Separately

STACKER VERSION DIMENSIONS

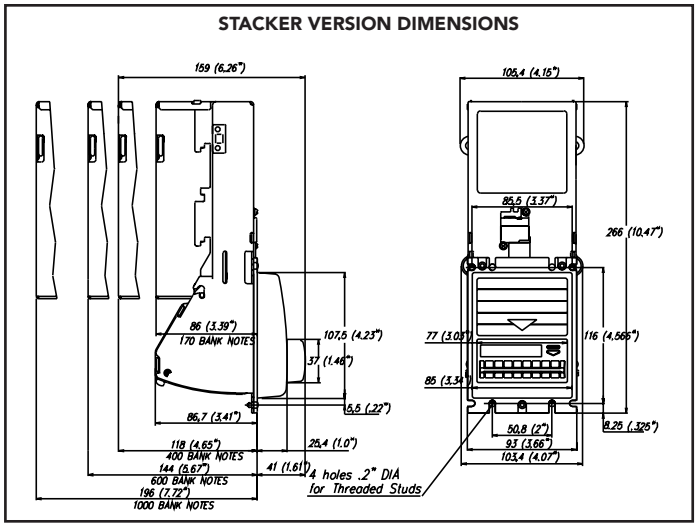

Part Number	Model	Old CashCode Number	New CashCode Number	To Accept	Price per ea.
42-6971-00	Amazing 154 UNV w/o LRC*	AMZUSA-154-UNV	US2-CSB-ST07-ML	$1, $5/four-ways	330.00
42-6970-00	Amazing Plus UNV w/o LRC*	AMZUSA-PLUS-UNV	US4-CSB-ST07-ML	$1, $5, $10, $20/four-ways	467.75
42-6972-00	Amazing Plus 1100 UNV w/o LRC*[1]	AMZUSA-PLUS-1100-UNV	US6-DSR-ST07-ML	$1, $5, $10, $20, $50, $100/four-ways	515.45
42-7318-00	Gaming Validator UNV w/o LRC*	–	USC-DSR-ST07-MLG	$1, $5, $10, $20, $50, $100/four-ways	515.45
42-3288-00	Canadian Amazing Plus 2100 UNV w/o LRC*	AMZCDN-2100-UNV	CA6-CSR-ST11-ML	CDN $2, $5, $10, $20, $50, $100	731.65

*Lockable Removable Cassette (LRC) sold separately

[1] Only model with RS232 Capabilities

LOCKABLE REMOVABLE CASSETTES (LRC)

LRC pictured with locks (Locks sold separately)

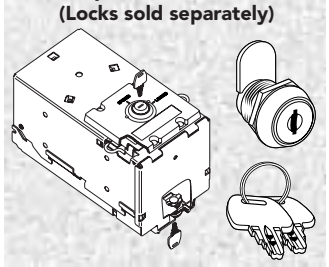

See page 243 for locks

Part Number	Description	Width	Capacity	Cash Code #	Price per ea.
42-6958-00	Lockable Removable Cassette (LRC)	67mm	400 Bills	CST400-67	91.50
42-6959-00	Lockable Removable Cassette (LRC)	67mm	600 Bills	CST600-67	103.10
42-6960-00	Lockable Removable Cassette (LRC)	67mm	1,000 Bills	CST1K067-COL	115.80
42-7314-00	Lockable Removable Cassette (LRC)	67mm	600 Bills	CST-600-67-GOL	140.10
42-8094-00	Gaming LRC	67mm	600 Bills	CST-600-67-GOL	140.10
42-6998-00	Lockable Removable Cassette (LRC)	71mm	400 Bills	AMZCST400-71	86.85
42-3289-00	Lockable Removable Cassette (LRC)	71mm	600 Bills	AMZCST600-71	108.85
42-3231-00	Lockable Removable Cassette (LRC)(CAN)	71mm	1,000 Bills	AMZ-CND-VAULT-1000	127.40
42-2046-00	Lock Mounting Kit to prevent removal of stacker from acceptor			AMZUSA-CC001	24.35

Note: 67mm Width bills for USA Currency, 71mm Width bills for Canada Currency

CASHCODE STACKERLESS BILL VALIDATOR

- Fixed-width bill validation (67mm or 71mm wide)
- Tool-free, one-step, easy service access with CashCode's patented "clamshell" design
- Built-in 12-point self-diagnostic with front LED to quickly pinpoint errors, and eliminate any guesswork
- Patented non-contact sensors with no-pinch rollers reduce the likelihood of jams
- Patented design incorporates multiple optical and magnetic sensors, maximizing counterfeit detection, and optimizing validation rates
- Auto-tuning and auto-calibrating sensors which require no calibration papers
- Beltless transport system with patented roller-based design, lowers maintenance costs and improves performance by eliminating troublesome and costly belts
- Anti-stringing protection
- Four-way bill validation for ease of customer bill insertion
- Pulse and serial interfaces
- Interface and denomination switch selectable
- Software socketed EPROM
- MTBF 750,000 cycles
- 36" harness with flying leads included
- Decal included
- One year warranty
- 96% or greater bill validation of street grade bills on first insertion: 99% on second attempt
- Low cost of ownership

HAPP CONTROLS
IS NOW AN AUTHORIZED
CashCode® SERVICE CENTER
See page 222 for details

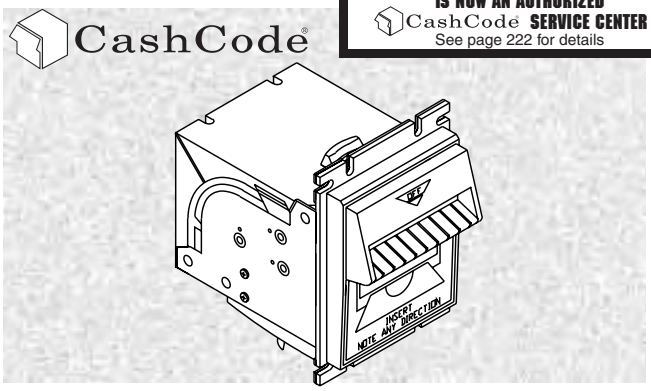

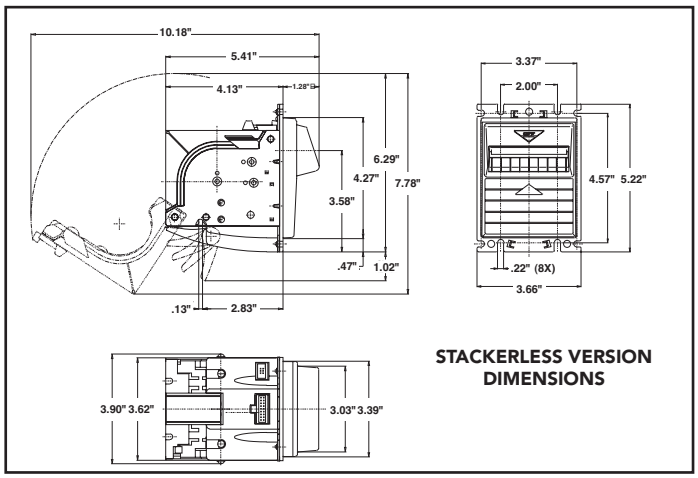

Part Number	Model	Old CashCode Number	New CashCode Number	To Accept	Price per ea.
42-6951-00	Amazing 154 Stackerless	AMZUSA-154	US2-PLS-BV05	$1, $5/four-ways	257.05
42-6952-00	Amazing Plus Stackerless	AMZUSA-PLUS	US4-CSO-BV05	$1, $5, $10, $20/four-ways	331.15
42-3234-00	Amazing Plus (Canadian)	AMZCDN-PLUS	CA4-CSO-BV5	CDN $2, $5, $10, $20	487.40

HRT SERIES

- **New** Horizontal, Retractable, Telescopic (HRT) validator is designed for compact spaces requiring horizontal configurations
- See Strackerless Bill Validators For Features

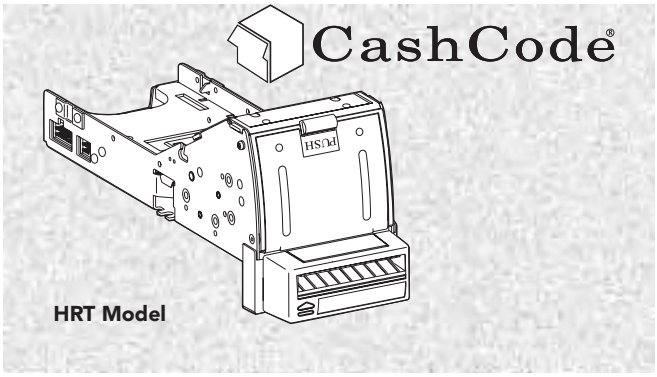

HRT Model

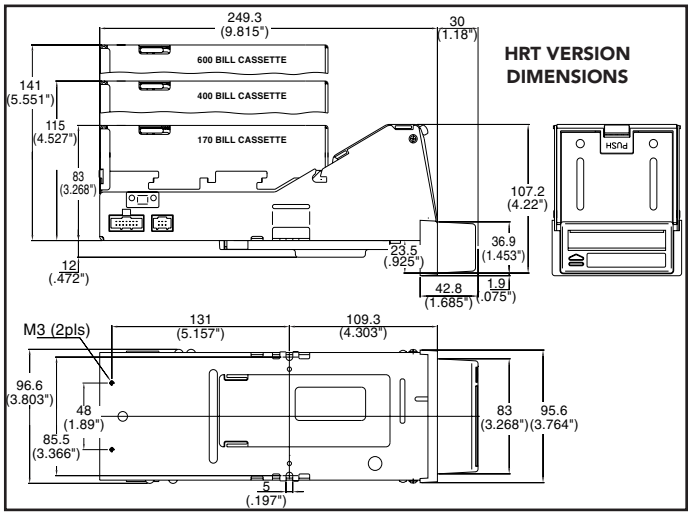

Part Number	Model	Old CashCode Number	New CashCode Number	To Accept	Price per ea.
42-6964-00	Amazing 154 HRT w/o LRC* & HRT Unv. Telescopic Bracket	AMZUSA-154-HRT	US2-CSB-ST07-MS	$1, $5/four-ways	330.00
42-6965-00	Amazing Plus HRT w/o LRC* & HRT Unv. Telescopic Bracket	AMZUSA-PLUS-HRT	US4-CSB-ST07-MS	$1, $5, $10, $20/ four-ways	467.75
42-6966-00	Amazing Plus 1100 HRT w/o LRC* & HRT Unv. Telescopic Bracket	AMZUSA-PLUS-1100-HRT	US6-DSR-ST07-MS	$1, $5, $10, $20, $50, $100/four ways	613.60
42-6984-00	Universal Telescopic Bracket for HRT Stacker Series Validators	AMZUSA-HRT-UBR001	–	–	148.50

*Lockable Removable Cassette (LRC) sold separately. See page 241

POWER SUPPLY ADAPTER

- Allows CashCode validators to be used in pre wired 110vac MEI applications to run 12vdc CashCode validator
- Simply plug the MEI connector end of the power supply into the Amp 9-Pin White connector and plug the other end directly into the CashCode validator (6-Pin Black Molex Connector)
- Ref AMZPS-AMP-265/12

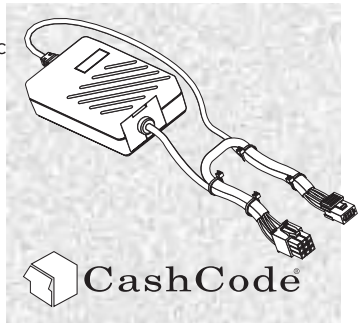

Part Number		Price per ea.
42-6934-00	CashCode power supply adapter MEI 9-pin (110vac) to CashCode 6-pin (12vdc)	69.50

PLUG IN CASHCODE TRANSFORMER

- Allows an easy source for +12vdc required for CashCode Validators
- Simply plug into any 110vac wall outlet and then plug other end into CashCode bill validator

CashCode®

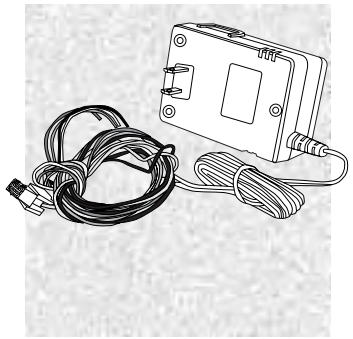

Part Number		Price per ea.
80-0075-00	Plug-In CashCode Transformer	24.15

CASHCODE ACCESSORIES

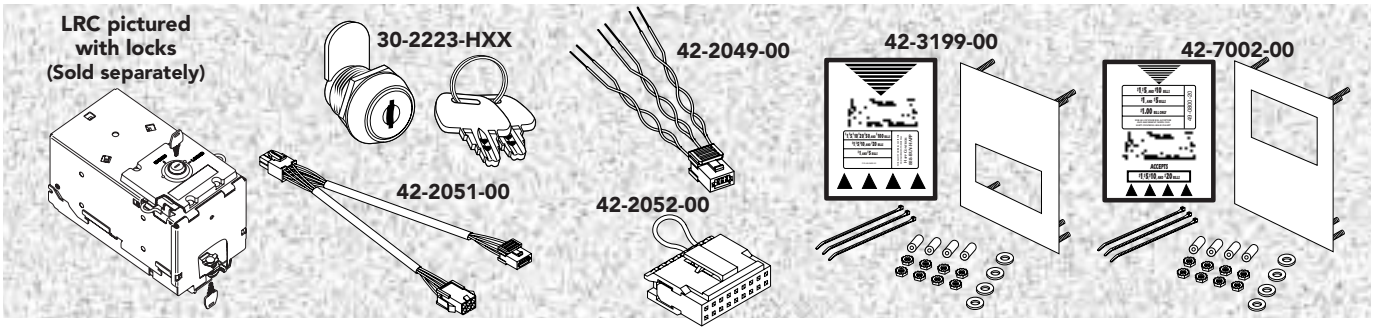

Part Number	CashCode Part Number		Price per ea.
42-6934-00	AMZPS-AMP-265/12	CashCode Power Supply Adapter MEI 9-pin (110vac) to CashCode 6-pin (12vdc)	69.50
42-0142-00	-	FL Bezel with Running Lights (No LCD DIsplay)	153.00
80-0075-00	-	Plug-in Wall Transformer to CashCode Validator (120vac to 12vdc)	24.15
42-2049-00	AMZXXX-12-06	Harness DC Power 6 Pin	7.00
42-2051-00	AMZXXX-MDB	Harness MDB	14.65
42-2052-00	AMZXXX-PUL-18	Connector Pulse 18 Pin	4.95
42-2050-00	AMZXXX-PC-18	Connector Serial 18 Pin, Harness	17.10
42-2053-00	AMZXXX-M-J-14-18	Serial Harness Adapter, JCM 14 Pin to CashCode 18 Pin	14.65
42-3199-00	-	Happ Mounting Kit for ALL CashCode UNV Series Upstacker & Downstacker	14.55
42-3530-10	-	Mounting Kit for Cash Code Black Plastic Rivet For Lock	2.05
42-7002-00	-	Happ Mounting Kit for CashCode ALL Stackerless Series	14.25
42-6962-00	AMZUSA-MK-PLUS-SD	Mounting kit for Downstacker Plus Series Validators	19.50
42-6982-00	AMZUSA-MK-1100-SU	Mounting kit for Upstacker Plus-1100 Series Validators	19.50
42-6983-00	AMZUSA-MK-1100-SD	Mounting kit for Downstacker Plus-1100 Series Validators	19.50
42-3230-00	AMZ-CDN-MK-UNV	Mounting Kit for Canadian Amazing Plus UNV Validator	13.95
42-3235-00	AMZ-CDN-MK-PLUS	Mounting Kit for Canadian Amazing PLUS Stackerless Validator	13.95
42-6984-00	AMZUSA-HRT-UBR001	Universal Telescopic Bracket for HRT Stacker Series Validators	148.50
42-6958-00	AMZCST400-67	LRC for Amazing Series Bill Validator 400 bill capacity, 67mm width	91.50
42-6959-00	AMZCST600-67	LRC for Amazing Series Bill Validator 600 bill capacity, 67mm width	103.10
42-7314-00	AMZCST-GOL	LRC for Amazing Series Bill Validator 600 bill capacity (for Pot-O-Gold Video Game)	140.10
42-6960-00	AMZCST1000-67	LRC for Amazing Series Bill Validator 1,000 bill capacity, 67mm width	115.80
42-2046-00	AMZUSA-CC001	Lock Mounting Kit to prevent removal of stacker from validator	24.35
30-2223-H01	-	Lock for CashCode LRC, House Key H01	7.00
30-2223-H02	-	Lock for CashCode LRC, House Key H02	7.00
30-2223-H03	-	Lock for CashCode LRC, House Key H03	7.00
30-2223-H04	-	Lock for CashCode LRC, House Key H04	7.00
30-2223-H05	-	Lock for CashCode LRC, House Key H05	7.00
30-2223-H06	-	Lock for CashCode LRC, House Key H06	7.00
30-2223-H08	-	Lock for CashCode LRC, House Key H08	7.00
30-2223-H10	-	Lock for CashCode LRC, House Key H10	7.00

BILL VALIDATOR TESTER

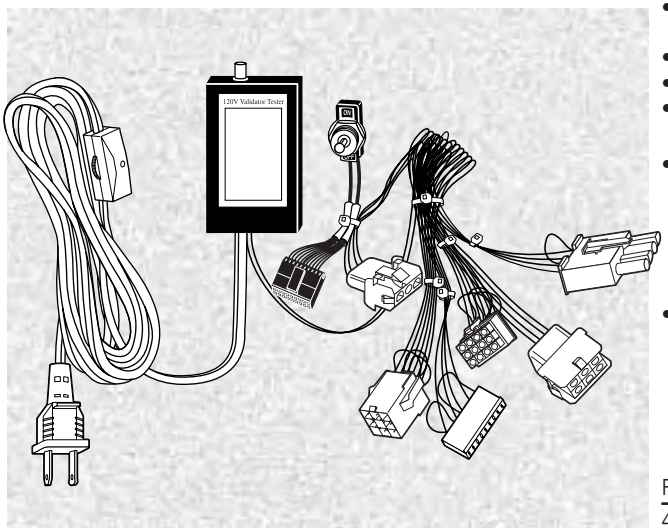

- Save money by testing the validator before sending them into repair centers
- Verify the operation of your validator while on location
- Use to bench test validators in your shop
- Upon acceptance of a good bill, the tester lamp will blink once for each pulse received
- 120V Used on: Ardac - USA
  Coinco – BA30B
  Conlux/Maka – NB, NB2, NBE, MKA, NBU
  MEI – VFM Series, VN2000, AE2000, AE2600,GL5, AL4, LE
  Rowe – CBA 2 soda version, CBA2, UBA2
- 24 V Used on: Ardac – USA, DBA Series, Tray Acceptors
  Coinco – BA32SA
  Conlux/Maka – NB14B, NB1LB, NB2-14B, NB2- 14C, NB2-16A, NBE21, NBE21B, NB-2JA, NB-2BA
  MEI – VFM Series, L405

Part Number		Price per ea.
42-8042-00	120V Bill Validator Tester	103.80
42-8043-00	24V Bill Validator Tester	132.55

HAPP CONTROLS SELLS BRAND NAME QUALITY

VALIDATOR MOUNTING KITS-MEI

- Kit includes the necessary items required to mount bill validator to either wood or steel
- Kit includes: Bright yellow decal with black printing, Mounting Plate with Pem Studs, Power Cable with Plug, 3 Tie Wraps, Spacers, Washers, and Nuts with Keps
- For use on either Stackerless, Upstacker, or Downstacker applications as noted

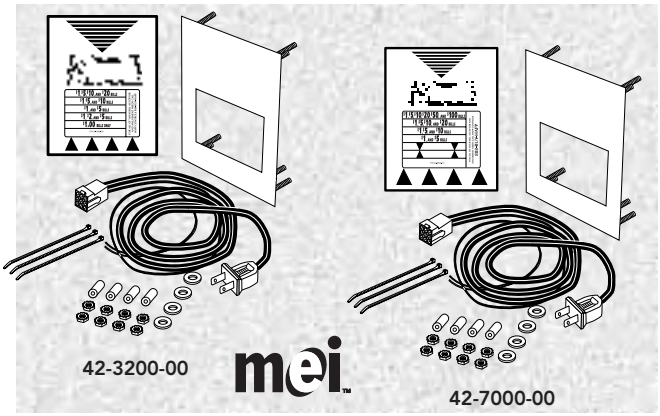

Part Number		Price per ea.
42-3200-00	Happ Mounting Kit for MEI Series 2000 Upstacker with either Contact Bezel (Bezel option #1) or Compact Fitted Bezel (Bezel option #5)	20.85
42-7000-00	Happ Mounting Kit for MEI AL, GL, LE (Stackless,Upstacker & Downstacker) and Series 2000 Downstacker with VFM5S Downstacking Bezel (Bezel Option #3)	20.85

VALIDATOR MOUNTING KITS-CASHCODE

- Kit includes the necessary items required to mount bill validator to either wood or steel
- Kit includes: Bright yellow decal with black printing, Mounting Plate with Pem Studs, 3 Tie Wraps, Spacers, Washers, and Nuts with Keps
- For use on either Stackerless, Upstacker, or Downstacker applications as noted

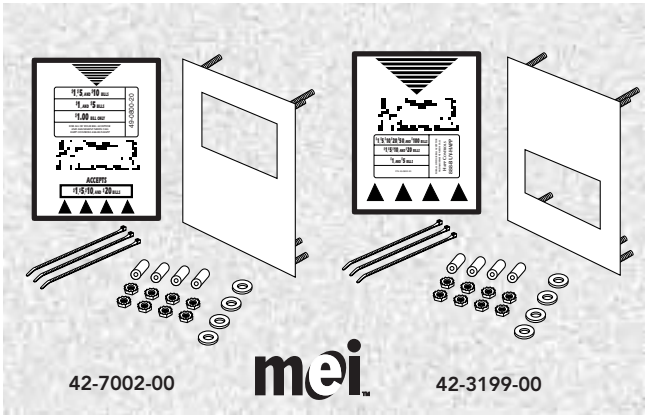

Part Number		Price per ea.
42-7002-00	Mounting Kit for CashCode Stackerless (Upstacker & Downstacker)	14.25
42-3199-00	Mounting Kit for CashCode UNV Universal Stacker (Upstacker & Downstacker)	14.55

VALIDATOR LABEL SETS

- Bright yellow label with black printing
- Laminated for durability and longevity
- Arrows attract attention to where money is to be inserted into validator
- Interior labels used to identify bill denominations accepted
- For use on either Stackerless, Upstacker, or Downstacker applications as noted

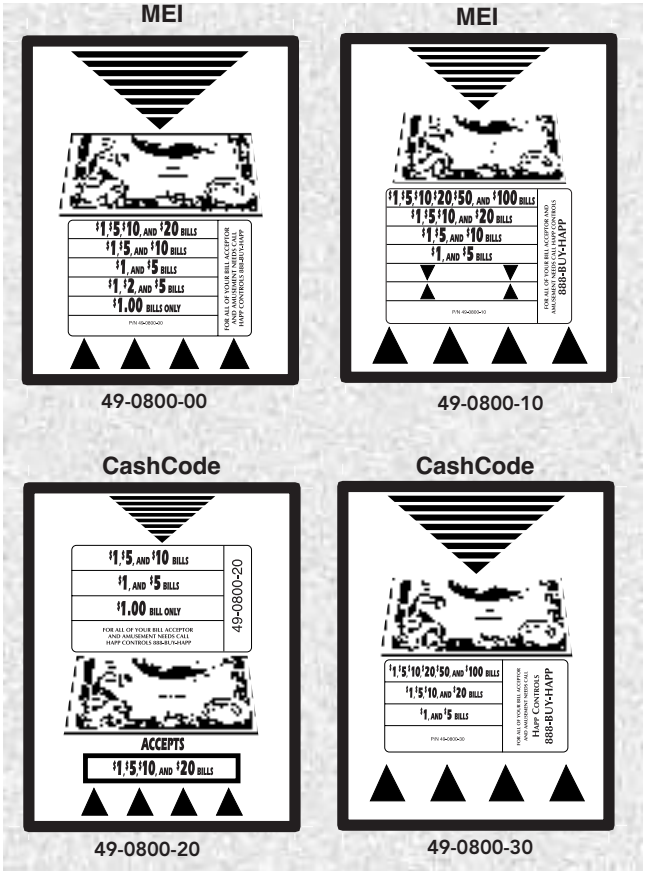

Part Number		Price per ea.	L/100
49-0800-00	Validator Label Set for MEI Series 2000 (Upstacker & Downstacker)	1.85	1.40
49-0800-10	Validator Label Set for MEI AL & GL Series (Stackerless, Upstacker & Downstacker)	1.85	1.40
49-0800-20	Validator Label Set for CashCode Stackerless	1.85	1.40
49-0800-30	Validator Label Set for CashCode UNV Universal Stacker (Upstacker & Downstacker)	1.85	1.40

Visit Our Web Site:
happcontrols.com
for NEW Product Updates!!

ROWE BILL CHANGERS

MODEL BA-35 REBUILDING KIT

Part Number		Price per ea.
27-1050-00	Model BA-35 Rebuilding Kit For BC-12, BC-35 Machines	60.30

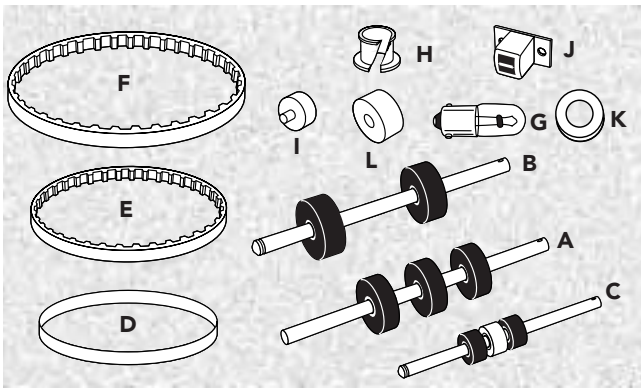

Rebuilding Kit Includes: (All parts are also sold separately)

Item Key	Number	Description	Qty. Incl.	Price per ea.
A	H25076601R	Roller & Shaft Assy. – Drive	1	8.75
B	H25076607R	Roller & Shaft Assy. – Drive	1	7.20
C	H25076202R	Double Roller & Shaft Assy.	1	9.40
D	H25186401R	Drive Belt – Semi Stretch	1	6.10
E	H25073801R	Timing Belt	1	2.85
F	H35082002R	Timing Belt – Motor Drive	1	3.50
G	91-0755-00	755 Miniature Lamp by G.E.	2	.80
H	H70146010R	Bearing – Nyliner	8	.47
I	H21312501R	Idler Roller – Drive	6	.96
J	H25076002R	Magnetic Head Assy.	1	23.60
K	H25078601R	Grommet	2	.96
L	H25194701R	Idler Roller	1	2.50

MODEL OBA4 REBUILDING KIT

Part Number		Price per ea.
27-1053-00	Model OBA Rebuilding Kit For 4900, BC-1, Some Phonographs	39.80

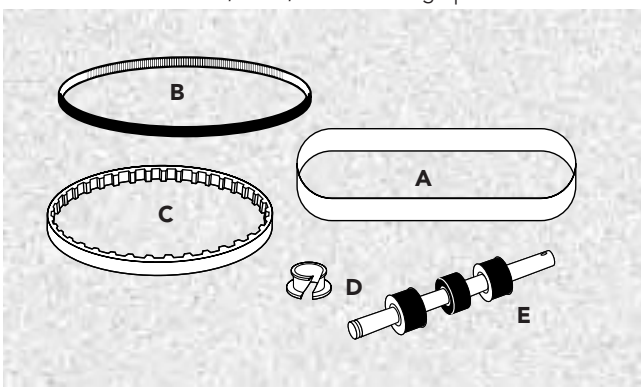

Rebuilding Kit Includes: (All parts are also sold separately)

Item Key	Number	Description	Qty. Incl.	Price per ea.
A	H35118601R	Drive Belt Clear	2	4.25
B	H45077201R	Timing Belt – High Friction	2	6.15
C	H35082001R	Timing Belt	1	4.65
D	H70146004R	Bearing – Nyliner	4	.71
E	H35080501R	Roller Assy.	1	22.35

MODEL BA-20 & BA-3 REBUILDING KIT

Part Number		Price per ea.
27-1207-00	Model BA-20 & BA-3 Rebuilding Kit For BC-10, BC-11, BC-20,BC-25, BC-25MC Machines	49.10

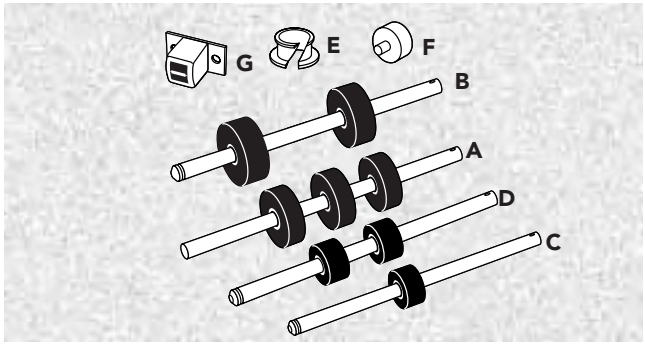

Rebuilding Kit Includes: (All parts are also sold separately)

Item Key	Number	Description	Qty. Incl.	Price per ea.
A	H25076601R	Roller & Shaft Assembly, Drive	1	8.75
B	H25076607R	Roller & Shaft Assembly, Drive	1	7.20
C	H25076801R	Roller & Shaft Assembly, Drive	1	5.80
D	H25076201R	Roller & Shaft Assembly	1	8.75
E	H70146010R	Bearing - Nyliner	8	.47
F	H21312501R	Idler Roller, Drive	6	.96
G	H25076002R	Magnetic Head Assembly	1	23.60

Visit Our Web Site:
happcontrols.com
for NEW
Product Updates!!
HAPP
VISIT OUR WEBSITE

© HAPP CONTROLS

ROWE BILL CHANGERS

MODEL CBA-I REBUILDING KIT

Part Number		Price per ea.
27-1052-00	Model CBA-I Rebuilding Kit For Early 448, 448E	39.80

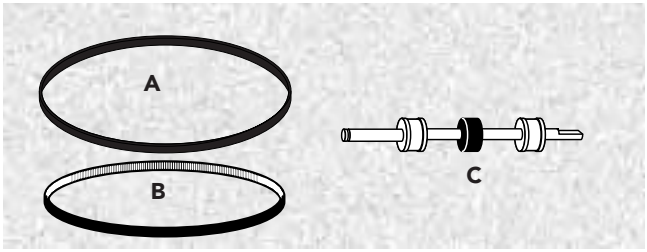

Rebuilding Kit Includes: (All parts are also sold separately)

Item Key	Number	Description	Qty. Incl.	Price per ea.
A	H35080903R	Drive Belt Clear	2	6.15
B	H35082004R	Timing Belt	2	7.95
C	H25223702R	Shaft & Pulley Assy. – Final	1	16.75

MODEL BA-50 DELUXE REBUILDING KIT

Part Number		Price per ea.
27-1204-00	Model BA-50 Deluxe Rebuilding Kit	79.55

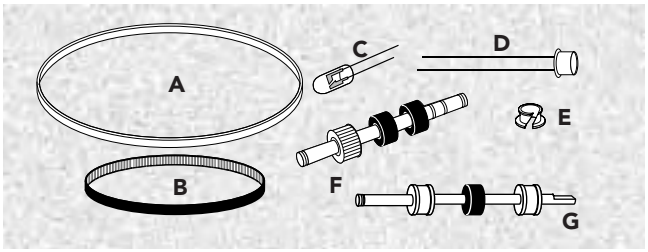

Rebuilding Kit Includes: (All parts are also sold separately)

Item Key	Number	Description	Qty. Incl.	Price per ea.
A	H35114901R	Upper Belt, Drive	2	6.75
B	H35082005R	Timing Belt	2	5.85
C	H70035314R	LED Lamp	1	2.50
D	H25236302R	Photoconductive Cell	2	9.60
E	H70146004R	Bearing Nyliner	4	.71
F	H35114501R	Shaft & Pulley, (Front Roller)	1	19.70
G	H35113601R	Drive Shaft Assembly, (Lower Roller)	1	23.75

MODEL CBA-II REBUILDING KIT

Part Number		Price per ea.
27-1206-00	Model CBA-II Rebuilding Kit For 448E/548/648/4900/5900	36.75

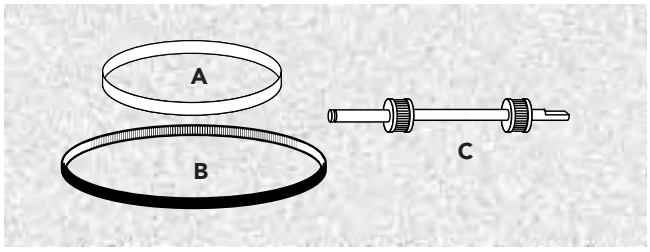

Rebuilding Kit Includes: (All parts are also sold separately)

Item Key	Number	Description	Qty. Incl.	Price per ea.
A	H0031956R	Timing Belt	2	6.75
B	H0031946R	Timing Belt	2	6.85
C	H25244101R	Upper Shaft & Pulley	1	5.20

MODEL BA-50 STANDARD REBUILDING KIT

Part Number		Price per ea.
27-1205-00	Model BA-50 Standard Rebuilding Kit	31.35

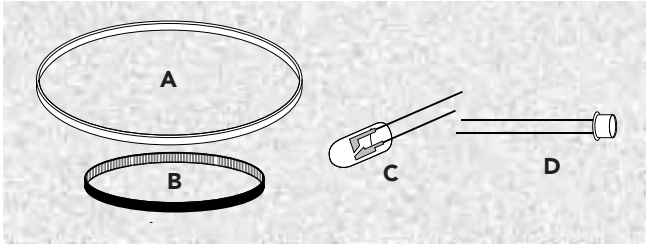

Rebuilding Kit Includes: (All parts are also sold separately)

Item Key	Number	Description	Qty. Incl.	Price per ea.
A	H35114901R	Upper Belt, Drive	2	6.75
B	H35082005R	Timing Belt	2	5.85
C	H70035314R	LED Lamp, Green	1	2.50
D	H25236302R	Photoconductive Cell	2	9.60

ARDAC REBUILDING KIT

Part Number	Description	Price per ea.
27-1210-00	Ardac Bill Changer Rebuilding Kit for USA 3, USA 15, 24V DBA, MDB	72.15

Rebuilding Kit Includes: (All parts are also sold separately)

Item Key	Number	Description	Qty. Incl.	Price per ea.
A	29X121	Idler Belt	2	1.65
B	29X174	Drive Belt	2	3.85
C	2X5007-USA	USA Transport Motor	1	63.40

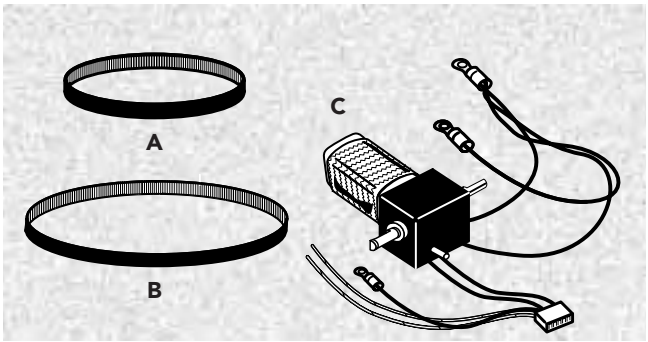

PARTS FOR ROWE BILL CHANGERS

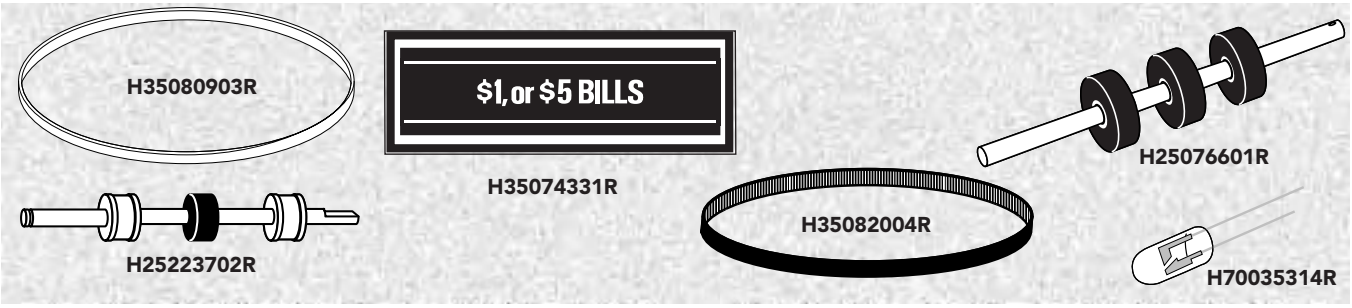

Part Number	Rowe Number	Description	Price per ea.
H166R	166	BC 12 $1 & $5 Instruction Decal	19.30
H167R	167	BC 12 $1 & $5 Instruction Decal	19.30
H170R	170	BC 11/12 $1 & $5 White on Clear Overlay	12.05
H1693R	1693	BC 8/9/20/25 $1 & $5 Overlay	21.70
H1715R	1715	BC 11/12 $1 & $5 Overlay	18.15
21073201	21073201	Switch for BC1200	6.35
H21312501R	21312501	Idler Roller, Drive	.96
H21312801R	21312801	Timing Belt	4.30
H25073801R	25073801	Timing Belt	2.85
H25076002R	25076002	Magnetic Head Assy.	23.60
H25076601R	25076601	Roller & Shaft Assy., Drive	8.75
H25076801R	25076801	Roller & Shaft Assy., Drive	5.80
H25078601R	25078601	Grommet	.96
H25186401R	25186401	Drive Belt, Semi-Stretch	6.10
H25194701R	25194701	Idler Roller	2.50
H25223702R	25223702	Shaft & Pulley Assy., Final	16.75
H25236302R	25236302	Photoconductive Cell	9.60
H25244101R	25244101	Upper Shaft & Pulley	5.20
H35074331R	35074331	BC 35 Change Decal	10.90
H35080501R	35080501	Roller Assy.	22.35
H35080903R	35080903	Drive Belt,Clear	6.15
H35082001R	35082001	Timing Belt	4.65
H35082002R	35082002	Timing Belt, Motor Drive	3.50
H35082004R	35082004	Timing Belt	7.95
H35082005R	35082005	Timing Belt	5.85
H35113601R	35113601	Drive Shaft Assy., Lower Roller	23.75
H35114501R	35114501	Shaft & Pulley, Front Roller	19.70
H35114901R	35114901	Upper Belt, Drive	6.75
H35118601R	35118601	Drive Belt, Clear	4.25
H45077201R	45077201	Timing Belt, High Friction	6.15
80-1125-00	65069201	PC Board for BC3500 power supply	279.00
H70035314R	70035314	LED Lamp, Green	2.50
H70146004R	70146004	Bearing, Nyliner	.71
H70146010R	70146010	Bearing, Nyliner	.47
H0031946R	0031946	Timing Belt	6.85
H0031956R	0031956	Timing Belt	6.75

© HAPP CONTROLS

BELTS FOR BILL VALIDATORS

- Top quality replacement bill validator belts
- Easy to use reference guide helps you figure out which belt you have, without knowing the manufacturer's part number
- A complete selection of the most popular replacement belts for all the major manufacturers
- Made in the USA

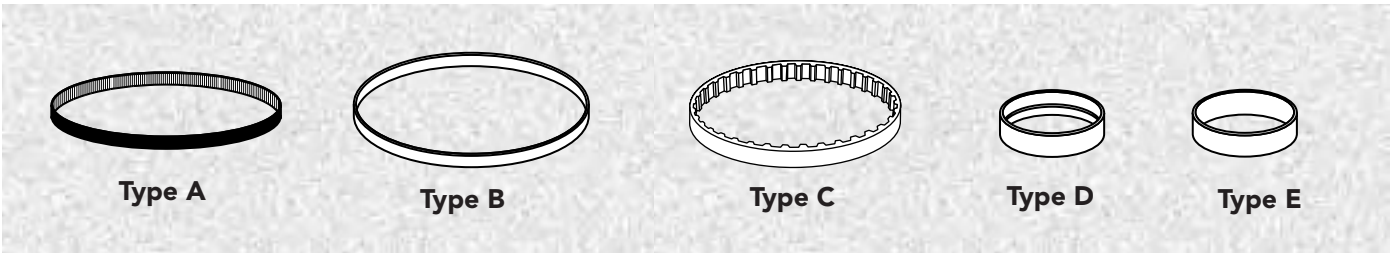

Part Number	Ref. No.	Description	Belt Type	Model	Size	Price per ea.
H290119	29X119	Stacker Belt, Gray	A	Ardac	15" x .25"	3.95
29X121	29X121	Idler Belt, Black	A	Ardac	7" x .125"	1.65
29X174	29X174	Drive Belt, Black	A	Ardac	15" x .25"	3.85
42-3124-00	29X083	Timing Belt	C	Ardac MBA	4.125"X.25"	4.70
42-3125-00	29X82	Drive Bolt	C	Ardac MBA	5.75"X.25"	5.55
42-3138-00	29X84	Top belt	B	Ardac MBA	5.62"X.25"	3.05
42-7109-00	29X24	Flat Idler Belt	B	Ardac 29 x 24	11" x .25"	5.55
921403	921403	Belt, Chasis, Black	A	Coinco	18.5" x .25"	6.05
921296	921296	Intermediate Wide Belt	B	Coinco	15.5" x .25"	9.30
920815	920815	Belt, Lower Housing	A	Coinco	4.5" x .375"	3.55
H440532	440532	Belt #1	A	Maka	4" x .125"	2.50
H440533	440533	Belt #2	A	Maka	14.25" x .25"	3.60
04-22-137	04-22-137	Gray Belt	A	MEI VFM5 , GL5	6.5" x .25"	4.10
04-22-162	04-22-162	Black Timing Belt	A	MEI VFM 1,2,3 & 4	6" x .25"	3.95
111597059	111597059	Stacker Belt, Single Bill	B	MEI VFM Series	7.5" x .125"	5.25
111597118	111597118	Drive Ring - Ribbed	D	MEI VFM Series	2.75" x .25"	1.20
111597118F	111597118F	Drive Ring - Flat	E	MEI VFM Series	2.75" x .25"	.63
250021015	250021015	Large Timing Belt	A	MEI Series 2000	5.72" x .19"	5.55
250023014	250023014	Small Timing Belt	A	MEI Series 2000	4.25" x .125"	2.25
42-7443-00	251028034	Flat Yellow Belt	B	MEI ZT Series	5.25" x 1.25"	6.35
42-7470-00	250129140	Timing Belt, 205T	C	MEI ZT Series	8.1875" x .1875"	3.70
H5271687N	5271687	Drive Belt, Black	B	National Buckpasser	9.5" x .25"	8.15
H0031946R	B0031946	Timing Belt	A	Rowe CBA2 UBA	18" x .25"	6.85
H0031956R	B0031956	Timing Belt	B	Rowe CBA2	20.5" x .25"	6.75
H21312801R	21312801	Timing Belt	C	Rowe BA20	12.75" x .19"	4.30
H25073801R	25073801	Timing Belt	C	Rowe BA20/35	7" x .1875"	2.85
H25186401R	25186401	Drive Belt, Semi Stretch	B	Rowe BA-35	7.296" x .313"	6.10
H35080903R	35080903	Drive Belt	B	Rowe CBA-1	21.25" x. 25"	6.15
H35082001R	35082001	Timing Belt	A	Rowe OBA	5.5" x. 25"	4.65
H35082002R	35082002	Timing Belt, Motor Drive	C	Rowe BA-35	8" x .1875"	3.50
H35082004R	35082004	Timing Belt	A	Rowe CBA-1	18.75" x .254"	7.95
H35082005R	35082005	Timing Belt	A	Rowe BA-50	16.75" x .25"	5.85
H35114901R	35114901	Upper Drive Belt	B	Rowe BA-50	18.5" x .25"	6.75
H35118601R	35118601	Drive Belt, Clear	B	Rowe OBA	11.375" x .25"	4.25
H45077201R	45077201	Timing Belt, High Friction	A	Rowe OBA	11" x .25"	6.15

ARDAC REPLACEMENT PARTS

Ardac

Item Key	Part Number	Description	Price per ea.
A	2X5007-USA	USA Transport Motor	63.40
B	2X6047-DBA	DBA Transport Motor	37.10
C	2X4598	DBA + USA Stacker Motor	34.95
D	2X6500	MDB Transport Motor	60.00

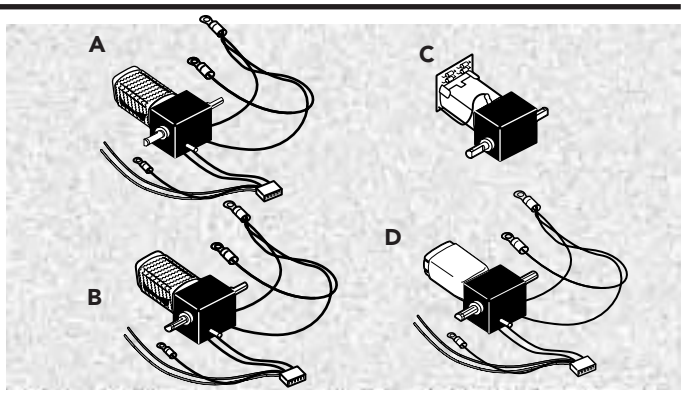

OVER/UNDER UPSTACKER VALIDATOR DOOR

- **New, thicker 16 gauge steel for improved security**
- Industry standard mounting dimensions allows this exclusive Happ Controls design to be used in the most popular games
- Innovative design to accommodate up to a 500 Bill Capacity stacker for MEI AE Validator
- New innovative mech. holder design prevents "stringing" and holds mech. firmly in place for maximum coin acceptance
- Designed to utilize both MEI AE2451U3E & AE2451U5E and Ardac USA3 (88X5033) and DBA5 (88X5118) Bill Validators
- Accepts both bills and coins
- Capacity of over $1,350 in coins
- Validator Harness with AC plug included
- Security ribs cast into frame to prevent pry bar entry
- Fitted with $.25 U.S. mech.

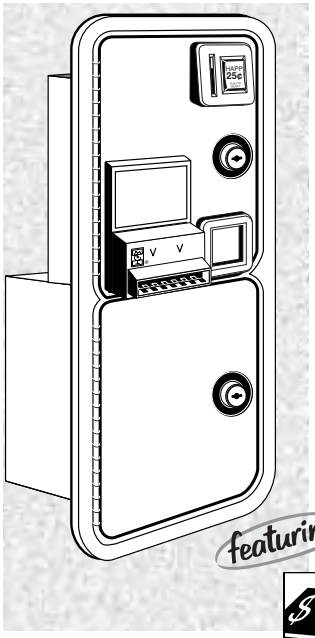

Part Number		Price per ea.
40-7000-00	O/U Upstacker Validator Door w/o Validator	119.30
40-7300-00	O/U Upstacker Validator Door with MEI AE2451U3E Accepts $1, $5 bills (300 Bill Capacity Stacker)	565.00
40-7500-00	O/U Upstacker Validator Door with MEI AE2451U5E Accepts $1, $5 bills (500 Bill Capacity Stacker)	589.05
40-8300-00	O/U Upstacker Validator Door with MEI AE2651U3E Accepts $1, $5, $10, $20 bills (300 Bill Capacity Stacker)	680.55
40-8500-00	O/U Upstacker Validator Door with MEI AE2651U5E Accepts $1, $5, $10, $20 bills (500 Bill Capacity Stacker)	704.65

EXCLUSIVE!

Custom "Guardian" Security Hasp available to protect your dollars, see page 132

GUARDIAN

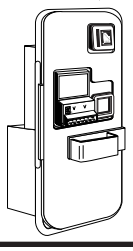

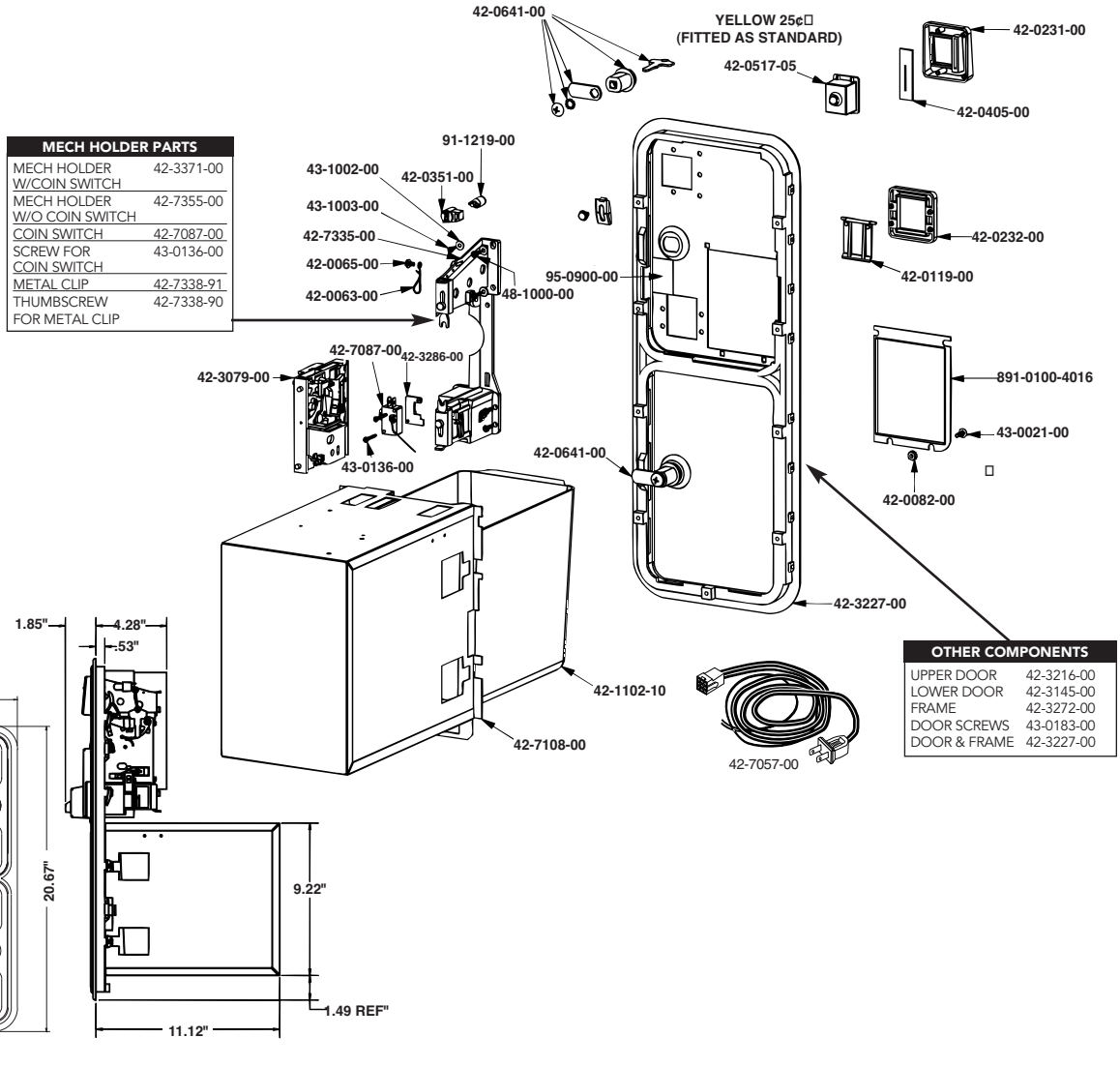

MECH HOLDER PARTS	
MECH HOLDER W/COIN SWITCH	42-3371-00
MECH HOLDER W/O COIN SWITCH	42-7355-00
COIN SWITCH	42-7087-00
SCREW FOR COIN SWITCH	43-0136-00
METAL CLIP	42-7338-91
THUMBSCREW FOR METAL CLIP	42-7338-90

OTHER COMPONENTS	
UPPER DOOR	42-3216-00
LOWER DOOR	42-3145-00
FRAME	42-3272-00
DOOR SCREWS	43-0183-00
DOOR & FRAME	42-3227-00

© HAPP CONTROLS

2-COIN ENTRY OVER/UNDER STACKER VALIDATOR DOOR

- Industry standard mounting dimensions allows this exclusive Happ Controls design to be used in the most popular games
- Innovative design to accommodate up to a 300 Bill Capacity stacker for MEI AE Validator
- New innovative mech. holder design prevents "stringing" and holds mech. firmly in place for maximum coin acceptance
- Designed to utilize MEI AE2411U3E or AE2451U3E Bill Validators in an upside down position
- Accepts both bills and coins
- Capacity of over $1,000 in coins
- Validator Harness with AC plug included
- Security ribs cast into frame to prevent pry bar entry
- Fitted with $.25 US mech

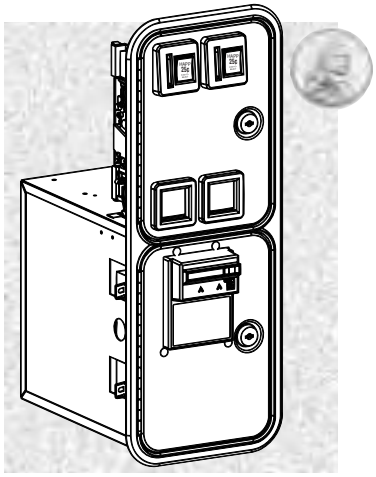

Part Number		Price per ea.
40-6000-00	2-Coin Entry O/U Stacker Validator Door, $.25 & $.25 w/o Validator	136.60
40-6000-10	2-Coin Entry O/U Stacker Validator Door, $1.00 & $.25 w/o Validator	136.60
40-6300-00	2-Coin Entry O/U Stacker Validator Door, $.25 & $.25 With MEI AE2451U3E (300 Bill Capacity Stacker)	530.00

EXCLUSIVE!
Custom "Guardian" Security Hasp available to protect your dollars, see page 131
GUARDIAN

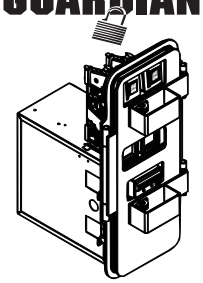

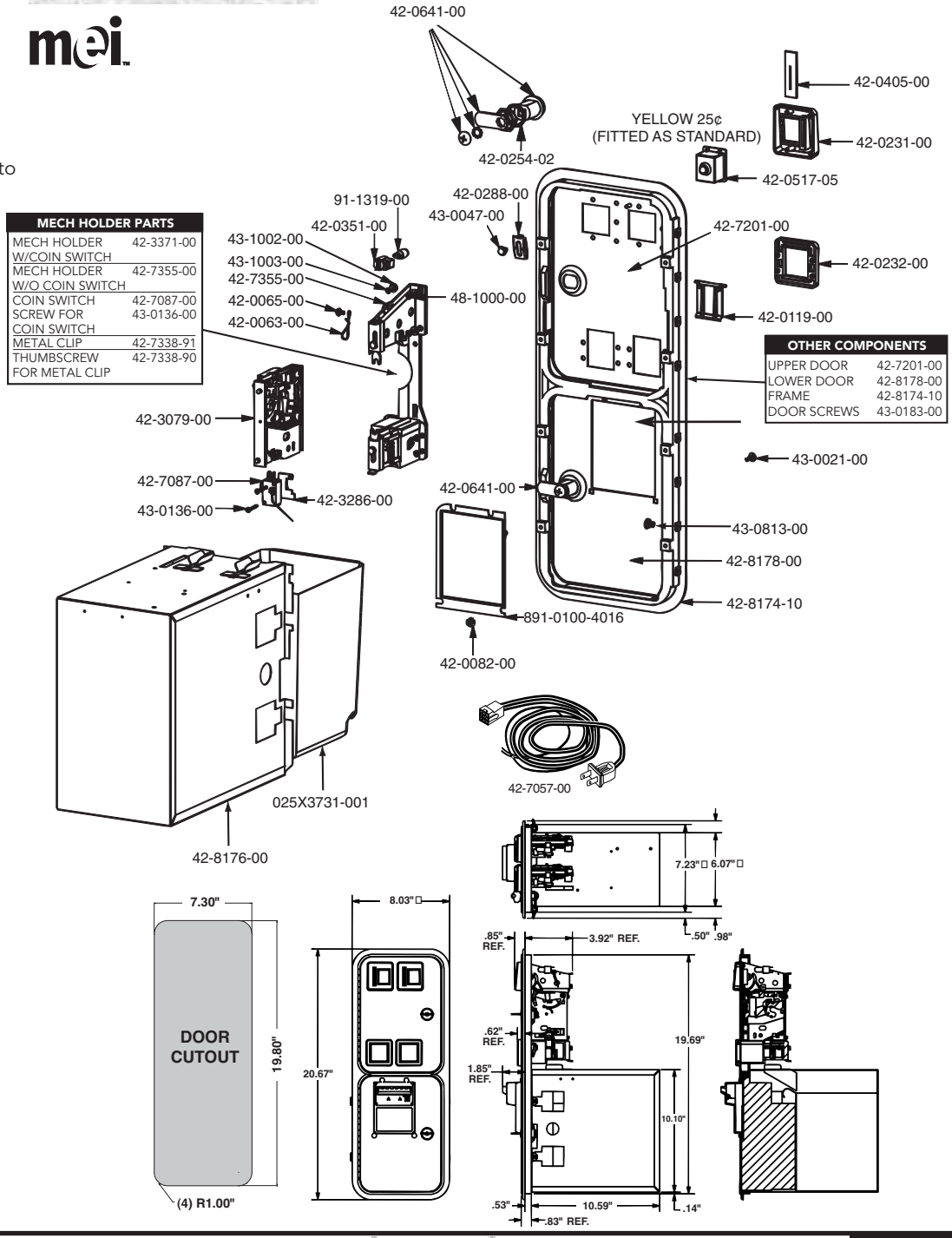

MECH HOLDER PARTS	
MECH HOLDER W/COIN SWITCH	42-3371-00
MECH HOLDER W/O COIN SWITCH	42-7355-00
COIN SWITCH	42-7087-00
SCREW FOR COIN SWITCH	43-0136-00
METAL CLIP	42-7338-91
THUMBSCREW FOR METAL CLIP	42-7338-90

OTHER COMPONENTS	
UPPER DOOR	42-7201-00
LOWER DOOR	42-8178-00
FRAME	42-8174-10
DOOR SCREWS	43-0183-00

OVER/UNDER STACKERLESS VALIDATOR DOOR

- **New, thicker 16 gauge steel for improved security**
- New innovative mech. holder design prevents "stringing" and holds mech. firmly in place for maximum coin acceptance
- Industry standard mounting dimensions
- New universal design
- Will accept the following bill validators:
  MEI:
  (VFM2*, VFM4*)
  CashCode:
  (SPXUSA-001, AMZUSA-154, AMZUSA-PLUS)
  JCM (DBA-01PB)
- Accepts bills and coins
- Capacity over $1,000 coins
- Security ribs to prevent pry bar entry are cast into frame
- Fitted with $.25 U.S. mech. (42-3079-00) and GOLD contact coin switch
- Steel Security Bar available. See below.

* Requires modification kit 42-1093-00 to move the black control box to the top of the MEI VFM2 or VFM4 validator.

- Fitted with $.25 US mech

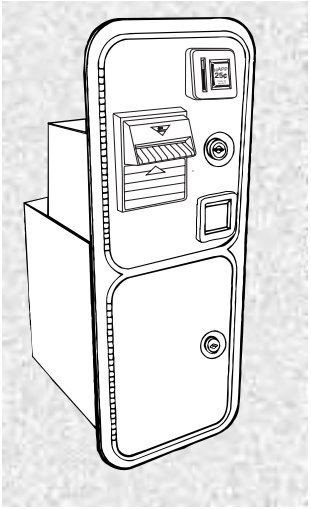

CashCode®

Part Number		Price per ea.
40-0618-00	Over/Under Stackerless Validator Door with CashCode Amazing 154 Bill Validator ($1, $5)	355.40
40-0473-00	Over/Under Stackerless Validator Door with CashCode Amazing Plus Bill Validator ($1, $5, $10, $20)	433.60
40-0355-00	Over/Under Stackerless Validator Door without Bill Acceptor	108.50
42-0526-00	Blanking Plate	6.15
42-1093-00	Conversion Kit for VFM2, VFM4	9.70

MECH HOLDER PARTS	
MECH HOLDER W/COIN SWITCH	42-3371-00
MECH HOLDER W/O COIN SWITCH	42-7355-00
COIN SWITCH	42-7087-00
SCREW FOR COIN SWITCH	43-0136-00
METAL CLIP	42-7338-91
THUMBSCREW FOR METAL CLIP	42-7338-90

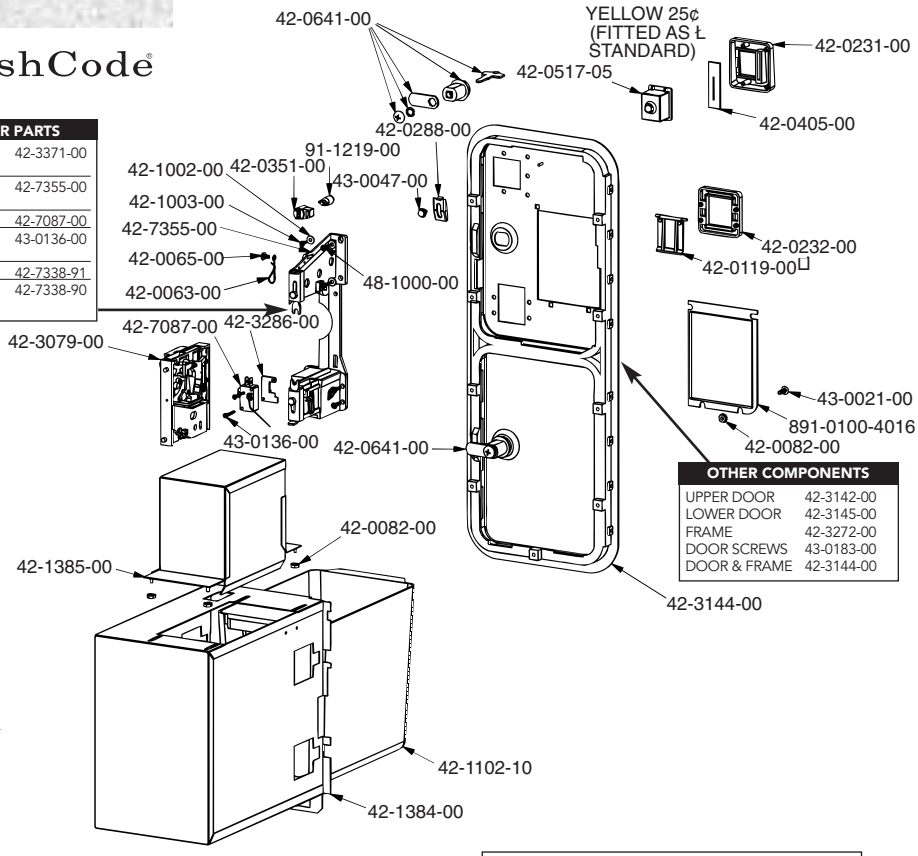

OTHER COMPONENTS	
UPPER DOOR	42-3142-00
LOWER DOOR	42-3145-00
FRAME	42-3272-00
DOOR SCREWS	43-0183-00
DOOR & FRAME	42-3144-00

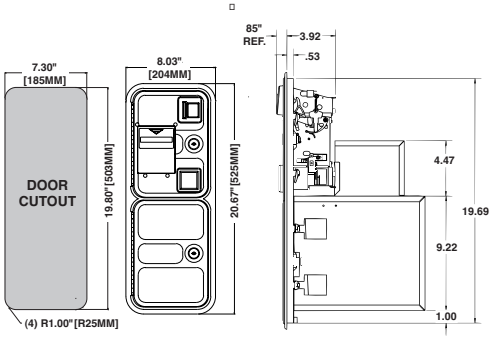

REJECT PUSH BUTTON SOLD AS ASSEMBLY ONLY.
SEE PAGE 216 FOR DENOMINATION INSERT SELECTION.

STEEL SECURITY BAR

- Protects cash box on **Over/Under Coin Door** and **Over/Under Validator Door**
- Heavy, plated steel
- Secured with padlock (not included)

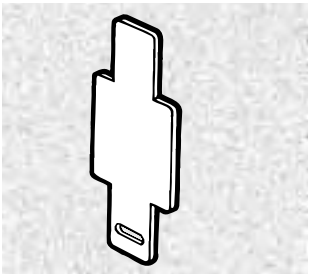

Part Number		Price per ea.
42-0431-00	Steel Security Bar	9.70

CASHCODE STACKERLESS VALIDATOR

- For use in Over/Under Stackerless validator door
- See page 242 for details

CashCode®

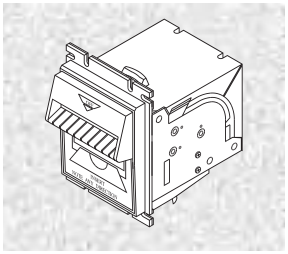

 © HAPP CONTROLS

CONVERTIBLE COIN/CURRENCY DOOR SYSTEM

Happ Controls introduces the first **Flexible** coin door system that changes with your needs.

The Convertible Coin/Currency Door System from **Happ Controls** is designed with **Flexibility** in mind. The upper door of this new innovative coin door is designed to be easily removed and converted to various door combinations to maximize your potential earnings. Whether it be a 2-Coin Entry, or 1 Coin Entry with Validator, conversion is as easy as removing 4 screws and installing the upper door of your choice. For easy identification purposes, each Convertible Coin/ Currency Door System is identified with a yellow label just under the lock of the upper door.

Be certain to exercise your **Flexibility** on your next game simply ask for it by name, **Convertible Coin/Currency Door** System exclusively from **Happ Controls.**

***Will also work with Wells Gardner/Coin Controls frame**

The Convertible Coin/Currency Door System is utilized in the following coin/currency doors:

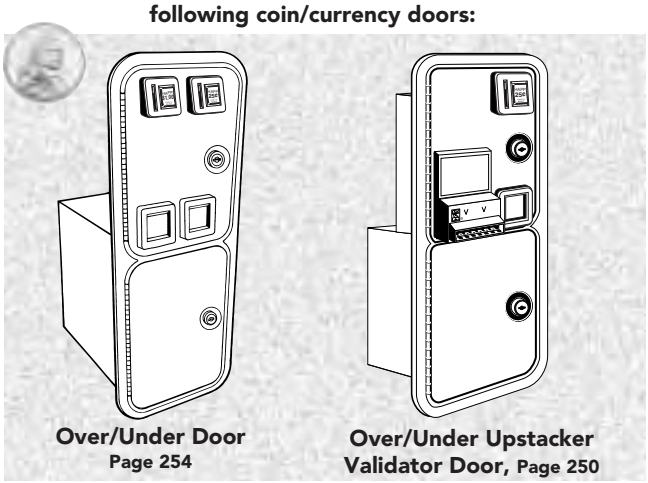

Over/Under Door Page 254

Over/Under Upstacker Validator Door, Page 250

UPPER DOOR ASSEMBLIES

mei

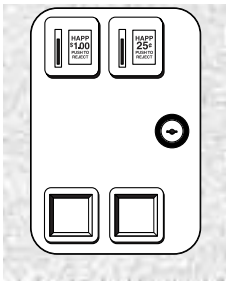

42-7196-100
2 Coin Entry
($1.00 and $.25)

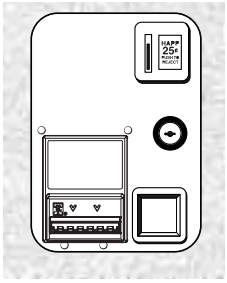

42-7198-00
1 Coin Entry ($.25) W/ MEI AE2451-U3E ($1, $5) Validator (300 Bill Capacity)

42-7197-00
1 Coin Entry ($.25) W/MEI AE2451-U5E ($1, $5) Validator (500 Bill Capacity)

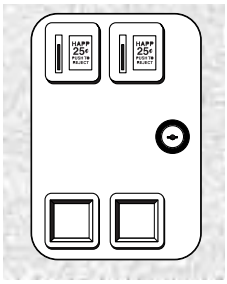

42-7196-00
2 Coin Entry ($.25 & $.25)

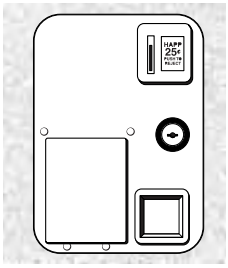

42-7199-00
1 Coin Entry ($.25) Validator Cutout with Blanking Plate for use with MEI (300 & 500 Bill Capacity)

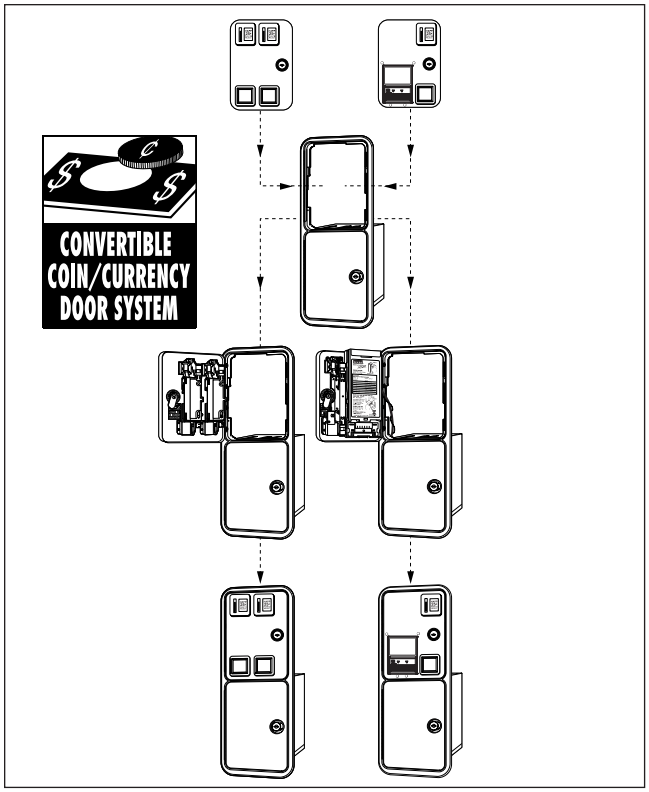

DO YOU WANT TO KNOW EACH TIME YOUR ORDER SHIPS OUT?

E-mail notification and order **tracking information** is now available from Happ Controls! Contact your sales representative or e-mail our customer service department at: **info@happcontrols.com** with your account information.

REAR ENTRY MECH HOLDER SYSTEM

All Happ Coin Doors feature our exclusive mech holder design:

- "Universal" Patented one-piece mech holder, fits **all** known 3" x 5" mechanical and electronic acceptors on the market.
- No removable locking bar to get lost
- Durable nylon plastic

Loosen thumbscrews and lift metal clips

Insert/Remove coin mechanism as shown

Slide metal clip down and tighten 2 thumbscrews

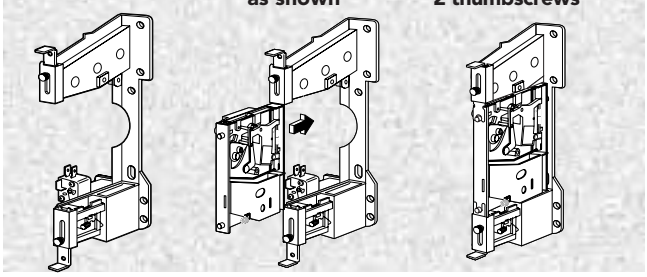

OVER/UNDER DOOR

- **New, thicker 16 gauge steel for improved security**
- Convertible Coin/Currency Door System compatible - See page 253
- Sturdy one-piece frame of die cast aluminum
- Security ribs to prevent pry bar entry are cast into frame
- "Universal" Patented one-piece mech. holder design. Will fit **all** known 3" x 5" mechanical and electronic acceptors on the market. See page 253 for illustration
- Exclusive reject button design with unbreakable metal plunger
- Heavy duty 16 gauge drawn steel doors
- Fitted with full metal cash box enclosure
- Mounting hardware included
- Industry standard mounting dimensions
- AMOA standard locks
- Estimated cashbox capacity: $1,350 in U.S. Quarters
- 14V lamp standard
- Fitted with $.25 US mech

Optional Equipment:

- Coin meter 4.5 VDC or 12 VDC
- Custom wire harness
- Foreign and token coin mechs
- Steel security bar available. See page 252
- Replacement Upper Door assembly for Happ Door 40-0055-03

See page 216 for Denomination Insert Selection

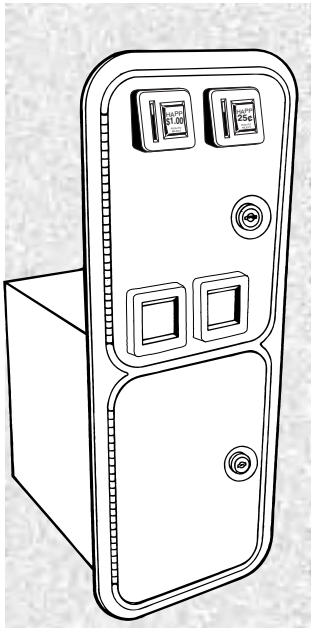

Part Number		Price per ea.	L/100
40-0038-00	Over/Under Door with Cashbox and Full Metal Enclosure	90.40	84.45

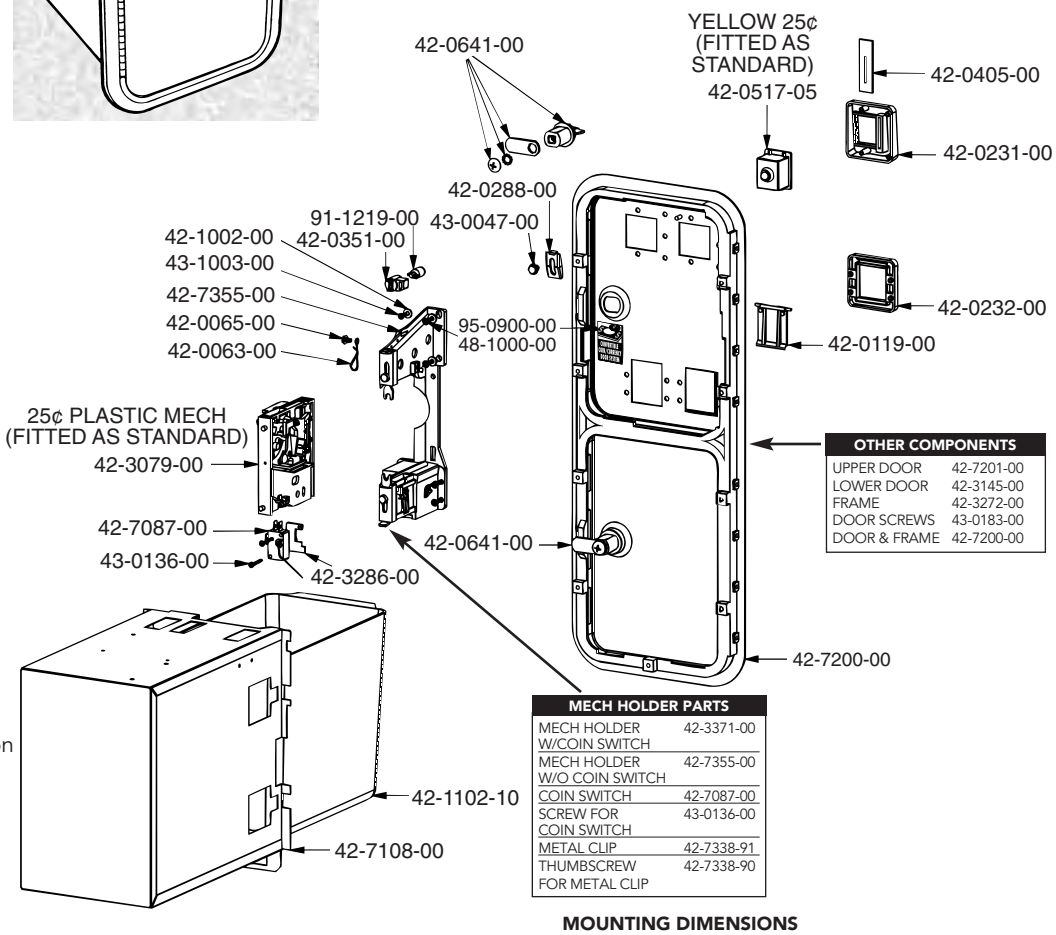

OTHER COMPONENTS	
UPPER DOOR	42-7201-00
LOWER DOOR	42-3145-00
FRAME	42-3272-00
DOOR SCREWS	43-0183-00
DOOR & FRAME	42-7200-00

MECH HOLDER PARTS	
MECH HOLDER W/COIN SWITCH	42-3371-00
MECH HOLDER W/O COIN SWITCH	42-7355-00
COIN SWITCH	42-7087-00
SCREW FOR COIN SWITCH	43-0136-00
METAL CLIP	42-7338-91
THUMBSCREW FOR METAL CLIP	42-7338-90

MOUNTING DIMENSIONS

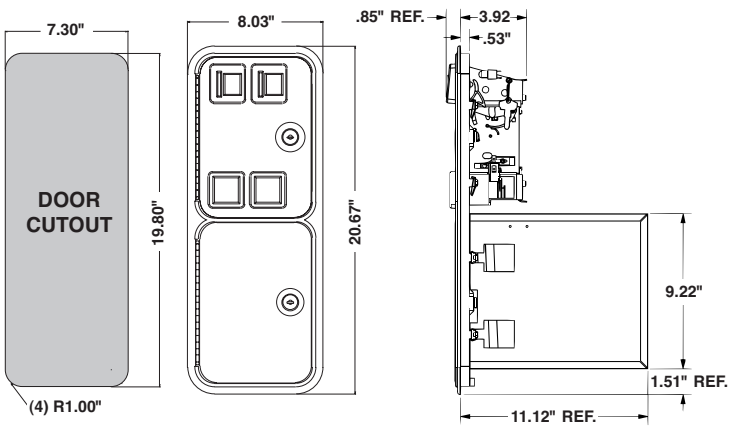

EXCLUSIVE!

"Guardian" Security Hasp available for Over/Under Doors
See page 132

GUARDIAN

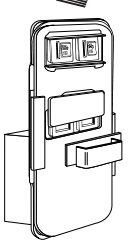

© HAPP CONTROLS

OVER/UNDER DOOR-SINGLE ENTRY

- **New, thicker 16 gauge steel for improved security**
- Ideal coin door for electronic mech applications
- Sturdy one-piece frame of die cast aluminum
- Security ribs to prevent pry bar entry are cast into frame
- "Universal" Patented one-piece mech. holder design. Will fit **all** known 3" x 5" mechanical and electronic acceptors on the market. See page 253 for illustration
- Exclusive reject button design with unbreakable metal plunger
- Heavy duty 16 gauge drawn steel doors
- Fitted with full metal cash box enclosure
- Mounting hardware included
- Industry standard mounting dimensions
- AMOA standard locks
- Estimated cashbox capacity: $1,350 in U.S. Quarters

Optional Equipment:

- Coin meter, 4.5 VDC or 12 VDC
- Custom wire harness
- Foreign and token coin mechs
- Steel security bar available. See page 252

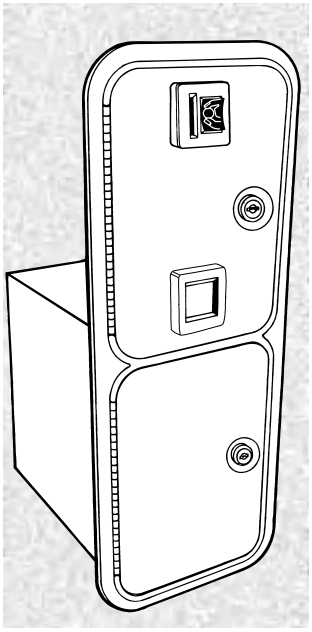

Part Number		Price per ea.	L/100
40-0512-00	Over/Under Door Single Entry Universal Logo with Cashbox and Full Metal Enclosure w/o Mech	73.50	68.65
42-3079-00	Happ $.25 Ultimech	14.10	_

MOUNTING DIMENSIONS

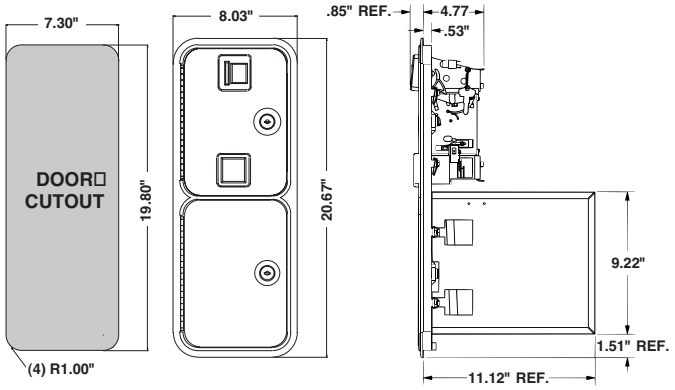

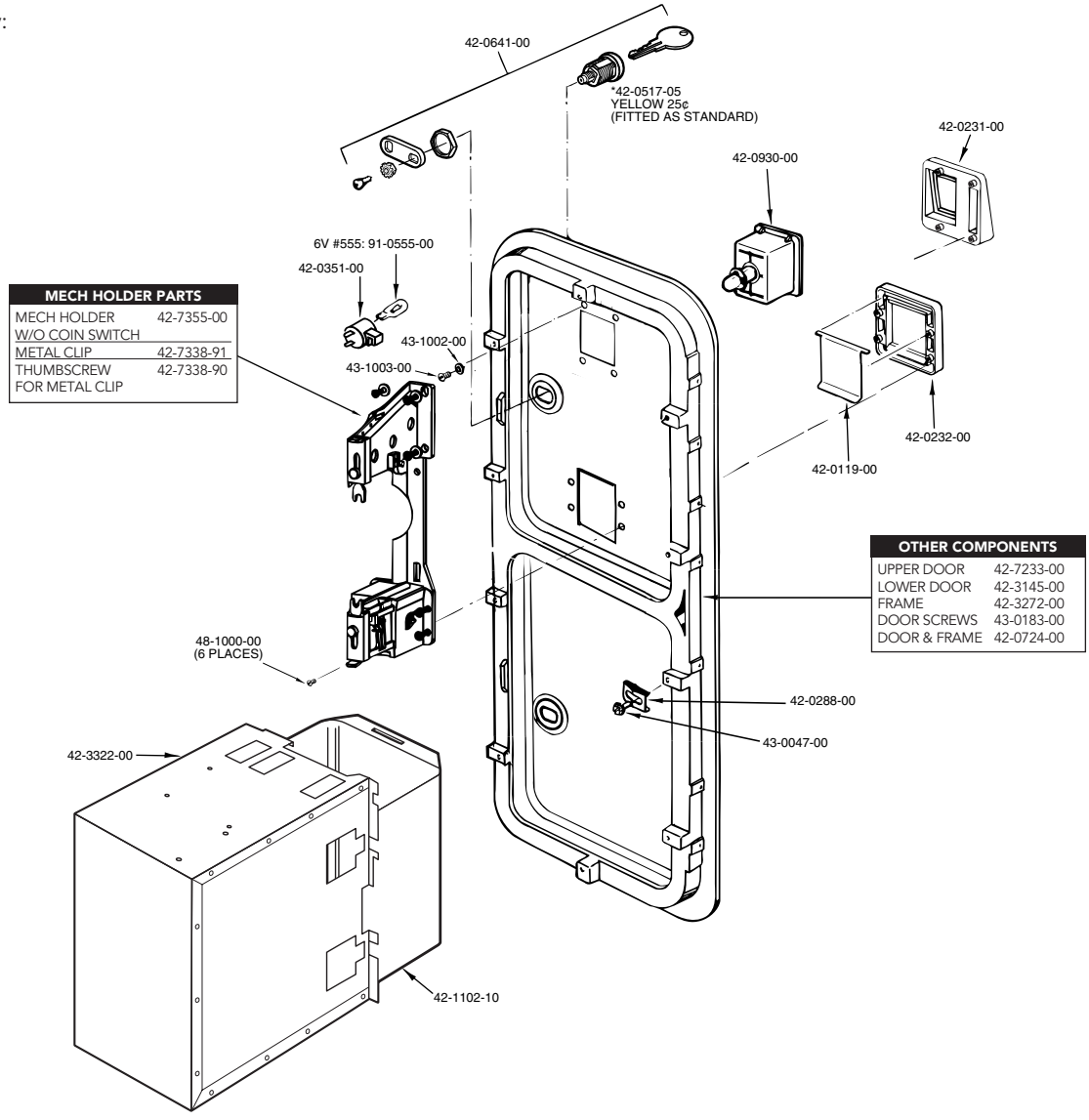

MECH HOLDER PARTS	
MECH HOLDER W/O COIN SWITCH	42-7355-00
METAL CLIP	42-7338-91
THUMBSCREW FOR METAL CLIP	42-7338-90

OTHER COMPONENTS	
UPPER DOOR	42-7233-00
LOWER DOOR	42-3145-00
FRAME	42-3272-00
DOOR SCREWS	43-0183-00
DOOR & FRAME	42-0724-00

OVER/UNDER UPSTACKER MID-WIDTH VALIDATOR DOOR

- New innovative design allows the use of 2 coin entries plus bill validator acceptance
- This innovative design allows the use of the new $1 coin. Accepts money in **three** different ways with a simple coin mech change ; 25¢ coin, $1 coin and dollar bills
- Accepts either MEI (Series 2000), or Dixie Narco Upstacking Bill Validators
- Heavy Duty 14 Gauge steel door
- New innovative mech. holder design prevents "stringing" and holds mech. firmly in place for maximum coin acceptance
- Sold with or without bill validator installed
- Exclusive reject button design with unbreakable metal plunger
- Sturdy one-piece steel frame with door clips for installation into cabinet
- Fitted with full metal cashbox enclosure
- Includes meter mounting provision inside of cashbox enclosure
- Cashbox will hold an estimated $1,350 in US Quarters
- MEI & Ardac Validator Harness with AC plug included
- Security ribs in frame prevent pry bar entry
- Mounting hardware included
- Fitted with $.25 US mech

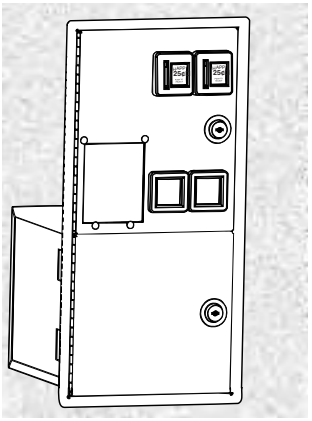

MOUNTING DIMENSIONS

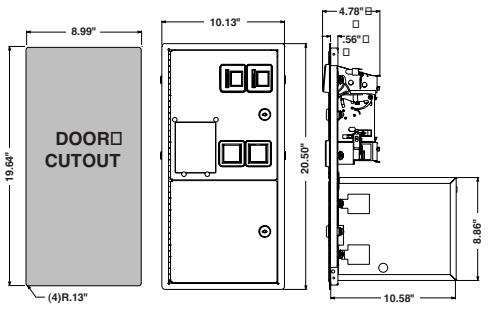

MECH HOLDER PARTS	
MECH HOLDER W/COIN SWITCH	42-3371-00
MECH HOLDER W/O COIN SWITCH	42-7355-00
COIN SWITCH	42-7087-00
SCREW FOR COIN SWITCH	43-0136-00
METAL CLIP	42-7338-91
THUMBSCREW FOR METAL CLIP	42-7338-90

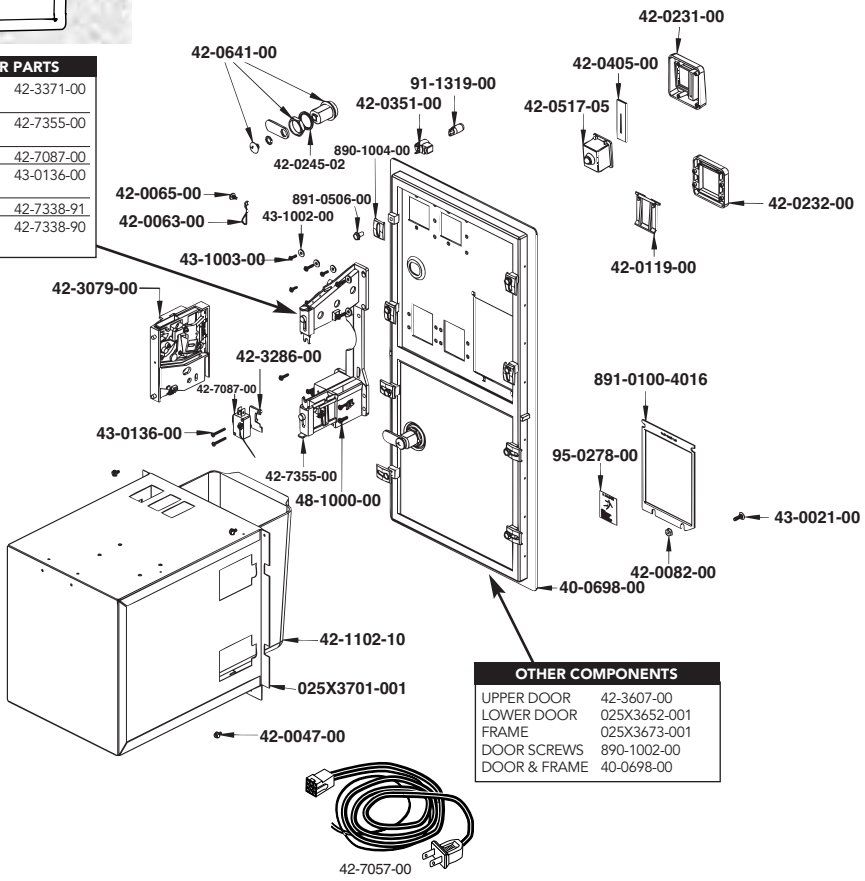

OTHER COMPONENTS	
UPPER DOOR	42-3607-00
LOWER DOOR	025X3652-001
FRAME	025X3673-001
DOOR SCREWS	890-1002-00
DOOR & FRAME	40-0698-00

EXCLUSIVE!

Custom "Guardian" Security Hasp available to protect your dollars, See page 131

GUARDIAN

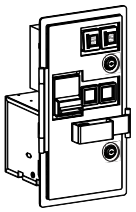

Part Number	Door Assembly Description	Accepts	Capacity	Price per ea.
Mid-Width Door Without Bill Validator				
40-3000-00	Without Validator Installed	-	-	132.55
With MEI Series 2000 Upstacker Bill Validator				
40-3300-00	With MEI AE2451-U3E Validator	$1 $2 & $5	300 Bills	549.50
40-3500-00	With MEI AE2451-U5E Validator	$1 $2 & $5	500 Bills	562.15
40-3700-00	With MEI AE2451-U7E Validator	$1 $2 & $5	700 Bills	614.35
40-4300-00	With MEI AE2651-U3E Validator	$1, $5, $10 & $20	300 Bills	676.85
40-4500-00	With MEI AE2651-U5E Validator	$1, $5, $10 & $20	500 Bills	710.70
40-4700-00	With MEI AE2651-U7E Validator	$1, $5, $10 & $20	700 Bills	715.60

© HAPP CONTROLS

OVER/UNDER MINI DOOR SYSTEM

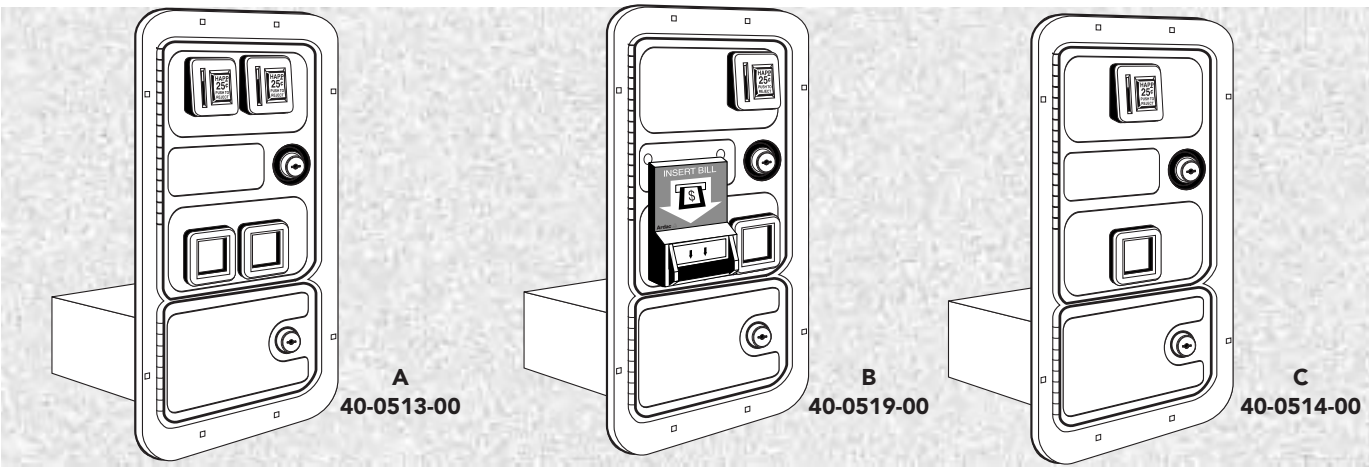

- Ideal coin door where space is a premium
- Sturdy one-piece frame of die cast aluminum
- Security ribs to prevent pry bar entry are cast into frame
- "Universal" patented one-piece mech. holder design. Will fit all known 3" x 5" mechanical and electronic acceptors on the market
- Exclusive reject button design with unbreakable metal plunger
- Fitted with full metal cashbox enclosure
- AMOA standard locks
- Estimated cashbox capacity: $400 in U.S. Quarters
- Bill validator version fitted with Ardac DBA7 validator to accept $1, $5, $10, and $20 bills with a stacker capacity of 250 bills
- Single entry ideal for use for Electronic Coin Mech. applications
- **Note: Upper door of 40-0519-00 is not tall enough to utilize MEI Series 2000 Upstacker Bill Validator**
- Fitted with $.25 US mech

MECH HOLDER PARTS	
MECH HOLDER W/COIN SWITCH	42-3371-00
MECH HOLDER W/O COIN SWITCH	42-7355-00
COIN SWITCH	42-7087-00
SCREW FOR COIN SWITCH	43-0136-00
METAL CLIP	42-7338-91
THUMBSCREW FOR METAL CLIP	42-7338-90

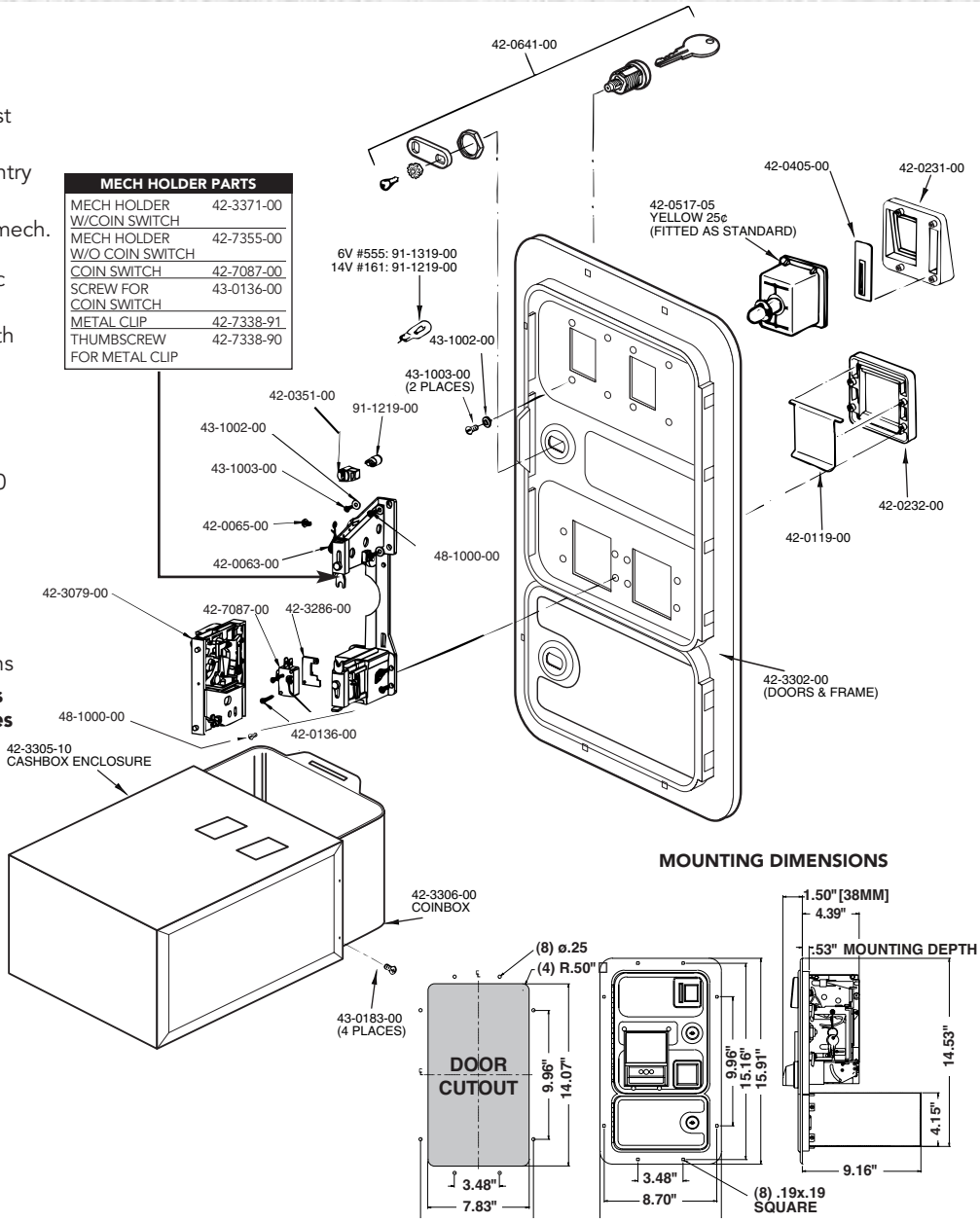

Part Number		Ref.	Price per ea.	L/100
40-0514-00	Over/Under Mini Door, 1-Entry	C	70.90	66.85
40-0513-00	Over/Under Mini Door, 2-Entry	A	90.40	84.45
40-0519-10	Over/Under Mini Validator Door w/o Ardac Validator	–	94.00	88.00
40-0519-00	Over/Under Mini Validator Door w/ Ardac Validator	B	515.60	509.55

PINBALL DOOR

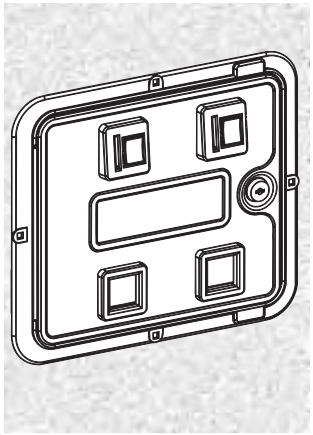

- Replacement part for all Data East / Sega and Williams pinballs
- "Universal" Patented one-piece mech. holder design. Will fit all known 3" x 5" mechanical and electronic acceptors on the market. See page 253 for illustration
- Heavy 16 gauge steel door
- Sturdy die cast aluminum frame
- Available 2 or 3 entry
- Available with U.S., token or foreign mechs
- See page 265 for cashbox assemblies
- Fitted with $.25 US mech

MECH HOLDER PARTS	
MECH HOLDER W/COIN SWITCH	42-3371-00
MECH HOLDER W/O COIN SWITCH	42-7355-00
COIN SWITCH	42-7087-00
SCREW FOR COIN SWITCH	43-0136-00
METAL CLIP	42-7338-91
THUMBSCREW FOR METAL CLIP	42-7338-90

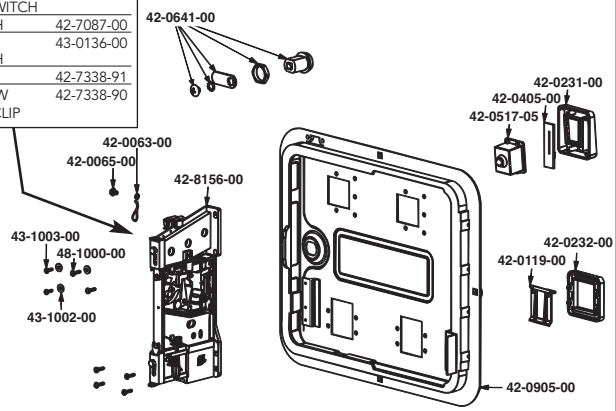

MOUNTING DIMENSIONS

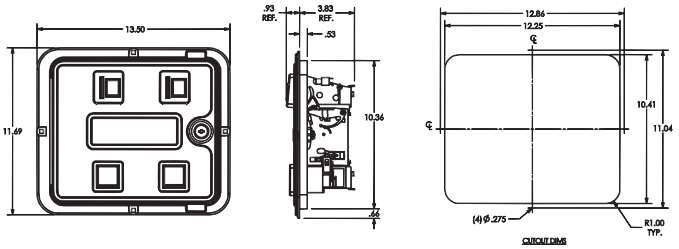

Part Number		Price per ea.	L/6
40-0707-00	Pinball Door, Double Entry	94.00	84.45

PINBALL BLANK DOOR

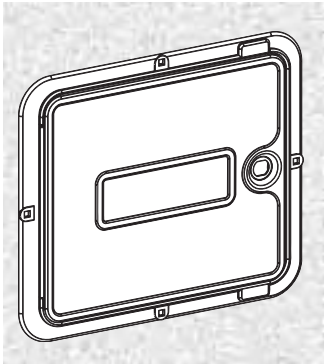

- Heavy 16 gauge steel door
- Ideal for cash box access door or simply an access door
- Replacement part for all Williams/Midway video game cabinets that utilize the 2 door system
- May be used as cashbox access door in conjunction with plastic cashbox.

See page 264

Part Number		Price per ea.	L/6
09-96020	Pinball Blank Door	29.50	27.30

UNIVERSAL PINBALL VALIDATOR DOOR

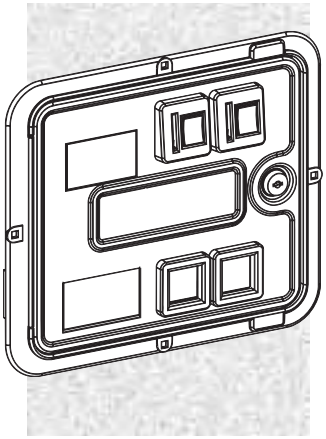

- Replacement part for all Stern/Data East / Sega/ and Williams pinballs
- "Universal" Patented one-piece mech. holder design. Will fit all known 3" x 5" mechanical and electronic acceptors on the market. See page 253 for illustration
- Heavy 16 gauge steel door
- Sturdy die cast aluminum frame
- Accepts bills and coins
- An available special coin box securely contains both bills and coins
- Supplied with installation instructions and harness for validator
- Available with or without validator
- See page 265 for cashbox assemblies
- Fitted with $.25 US mech
- Will accepts either:
  All CashCode Stackerless Models
  MEI VFM-2 &VFM-4, AL4, GL5, LE Stackerless
  MEI Upstackers-
  (AE2451U3E & AE2451U5E)
  Ardac Upstackers-
  (DBA2 (88X5033) & DBA5 (88X5118)
- Includes hardness for stern pinball

MECH HOLDER PARTS	
MECH HOLDER W/COIN SWITCH	42-3371-00
MECH HOLDER W/O COIN SWITCH	42-7355-00
COIN SWITCH	42-7087-00
SCREW FOR COIN SWITCH	43-0136-00
METAL CLIP	42-7338-91
THUMBSCREW FOR METAL CLIP	42-7338-90

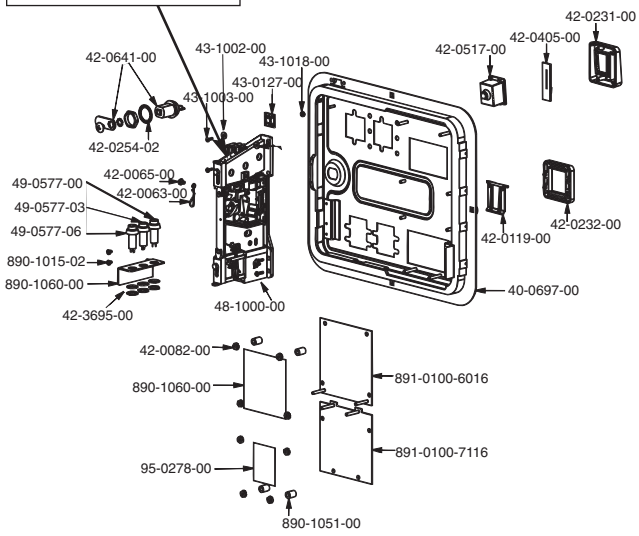

OVERALL DIMENSIONS

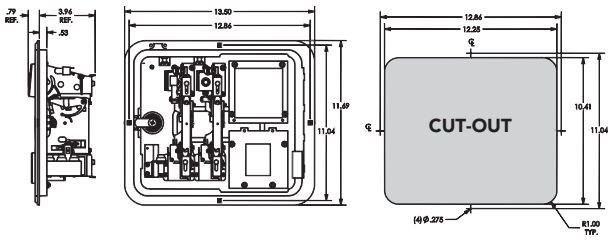

Part Number		Price per ea.	L/6
40-0696-00	Universal Pinball Validator Door without Cashbox Assembly	114.45	108.50

© HAPP CONTROLS

MULTI-PLAYER OVER/UNDER DOOR

- Two doors provide improved security, lower door provides access to cashbox
- "Universal" Patented one-piece mech. holder design. Will fit **all** known 3" x 5" mechanical and electronic acceptors on the market. See page 253 for illustration
- Sturdy 1 piece die cast aluminum frame
- 2, 3 or 4 coin entry doors available
- Security ribs to prevent pry bar entry are cast into frame
- Heavy duty 16 gauge drawn steel doors
- Exclusive reject button design with unbreakable metal plunger
- Fitted with $.25 mechs and 14V lamps as standard
- Estimated cashbox capacity over $2,000 in U.S. Quarters

* Reject Push Button sold as assembly only

See page 216 for Denomination Insert Selection

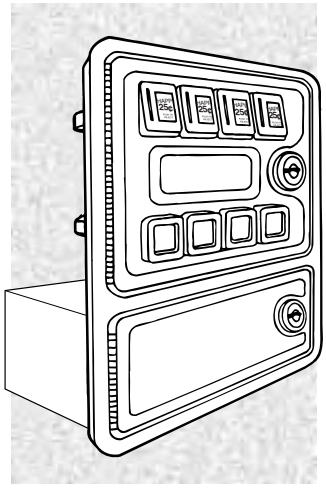

Part Number		Price per ea.	L/6
40-0946-00	4-Entry Multi-Player Over/Under Door w/o Cashbox	119.30	114.45
40-0946-20	2-Entry Multi-Player Over/Under Door w/o Cashbox	95.25	90.40
42-7328-00	2&4 Entry Enclosure For Multiplayer Over/Under Door	54.30	46.05

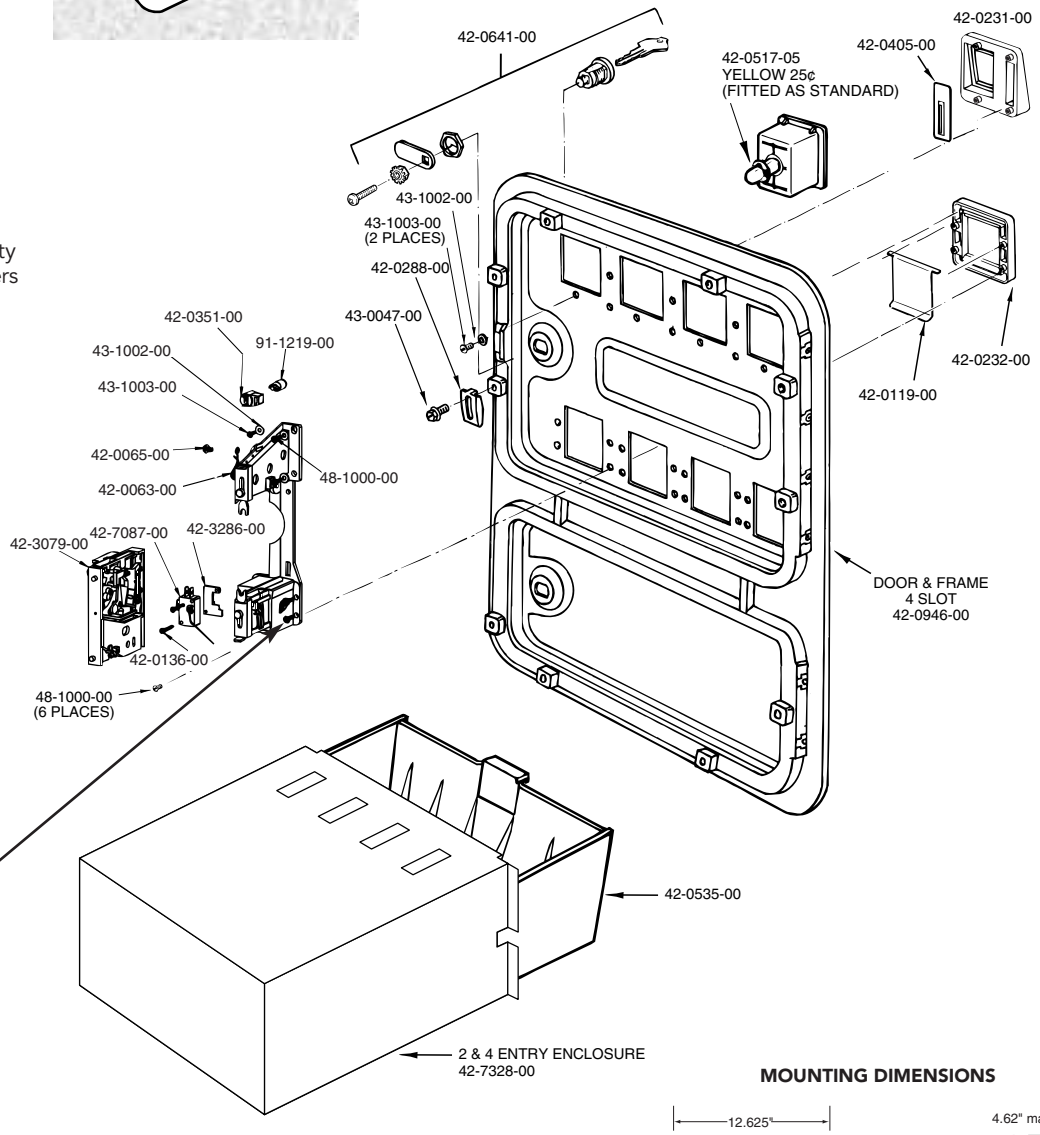

MECH HOLDER PARTS	
MECH HOLDER W/COIN SWITCH	42-3371-00
MECH HOLDER W/O COIN SWITCH	42-7355-00
COIN SWITCH	42-7087-00
SCREW FOR COIN SWITCH	43-0136-00
METAL CLIP	42-7338-91
THUMBSCREW FOR METAL CLIP	42-7338-90

MOUNTING DIMENSIONS

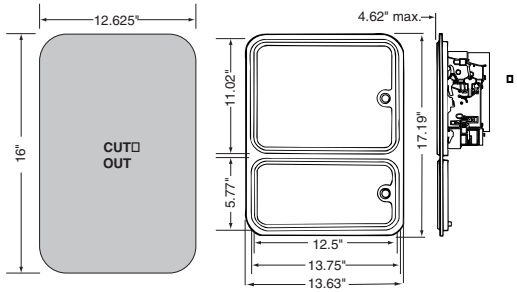

MULTI-PLAYER DOOR

- Industry standard mounting dimensions
- "Universal" Patented one-piece mech. holder design. Will fit **all** known 3" x 5" mechanical and electronic acceptors on the market. See page 253 for illustration
- Sturdy 1 piece die cast aluminum frame
- 2, 3 or 4 coin entry doors available
- With new Cashbox System IV, see page 265 for details
- Security ribs to prevent pry bar entry are cast in to frame
- Estimated cashbox capacity: $1,500 in U.S. Quarters
- Fitted with $.25 US mech

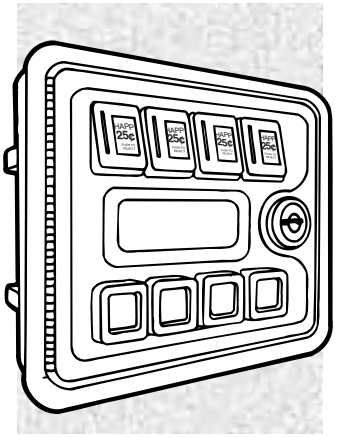

- Reject Push Button sold as assembly only

See page 216 for Denomination Insert Selection

Part Number		Price per ea.	L/100
40-0008-00	Standard Door, Double Entry w/o Harness, Meter or Box Assembly	95.25	90.40
40-0009-00	Standard Door, Triple Entry w/o Harness, Meter or Box Assembly	123.55	117.25
40-0325-00	Standard Door, Four Entry w/o Harness, Meter or Box Assembly	119.30	114.45
42-0605-00	Cashbox Assembly, Double Entry	31.95	28.75
42-0606-00	Cashbox Assembly, Triple Entry	31.95	28.75
42-0607-00	Cashbox Assembly, Four Entry	31.95	28.75

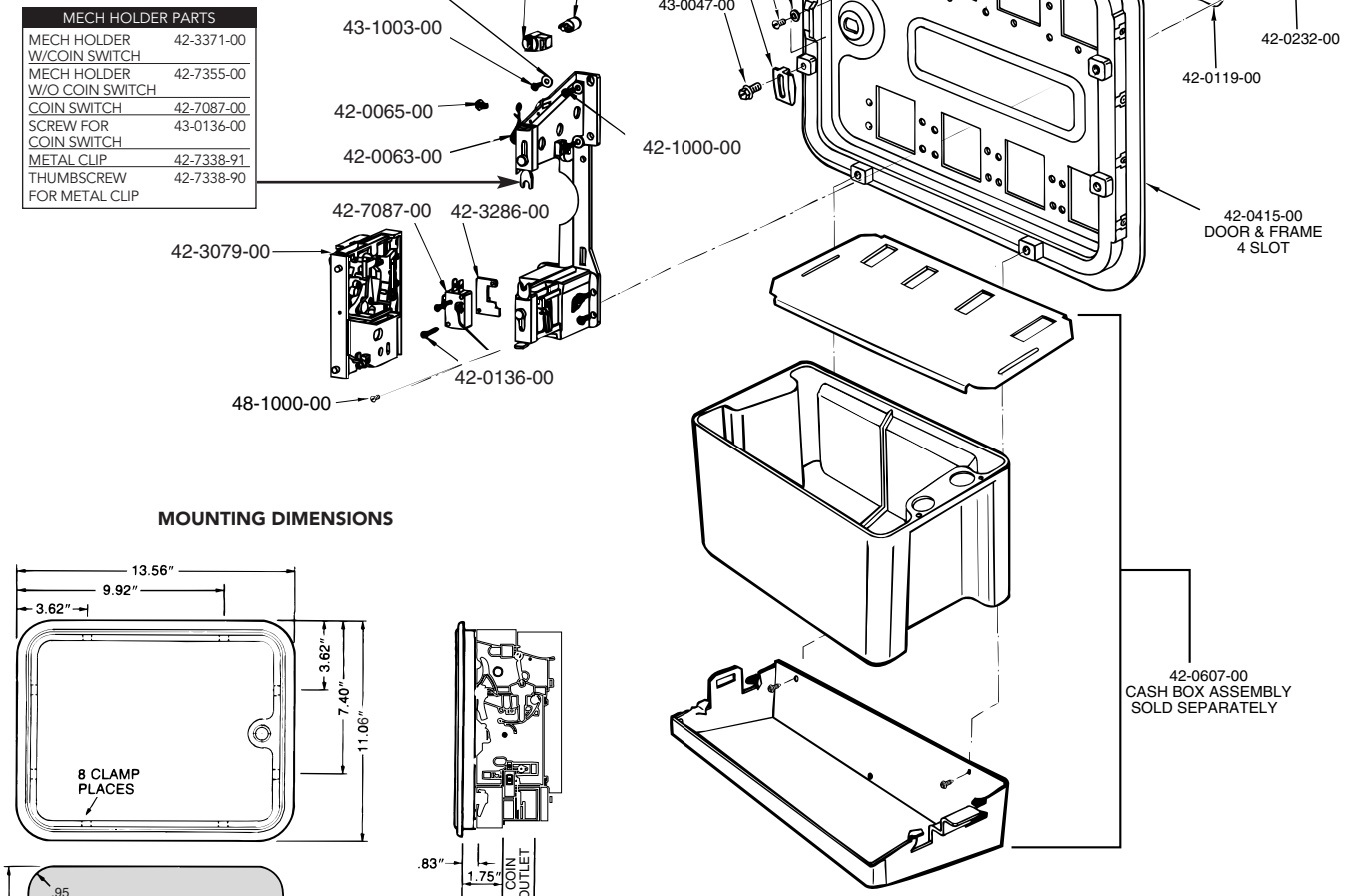

MECH HOLDER PARTS	
MECH HOLDER W/COIN SWITCH	42-3371-00
MECH HOLDER W/O COIN SWITCH	42-7355-00
COIN SWITCH	42-7087-00
SCREW FOR COIN SWITCH	43-0136-00
METAL CLIP	42-7338-91
THUMBSCREW FOR METAL CLIP	42-7338-90

MOUNTING DIMENSIONS

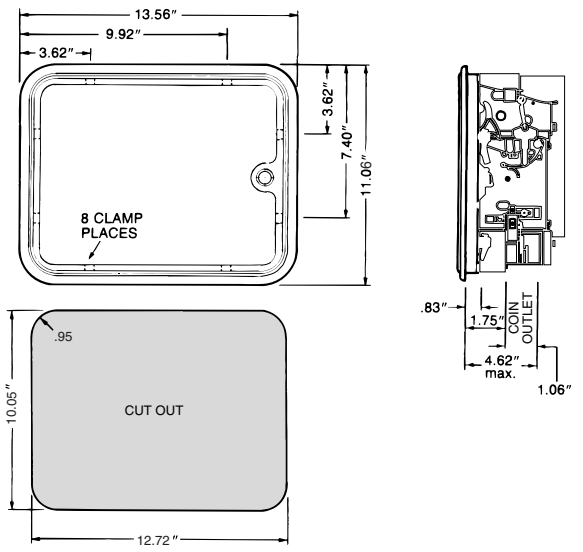

 © HAPP CONTROLS

ENTROPY TRIPLE DOOR

- Combines separate doors for coin acceptors, cashbox, and ticket dispenser all on one frame
- Fitted with $.25 mechs. and 14v lamps as standard
- Hot rolled steel frame 1.8mm thick
- Cold rolled steel doors 1.6mm thick
- Double bitted locks
- 3-Point locking mechanism on the cashbox door for increased security
- Large cashbox capacity holds $650 in U.S. quarters
- Extra large ticket shroud on ticket door to prevent ticket jams
- Durable zinc diecast reject bezels
- Ticket door bracket that allows ticket door to stop at a 90° angle for easy service
- Ticket dispenser sold separately

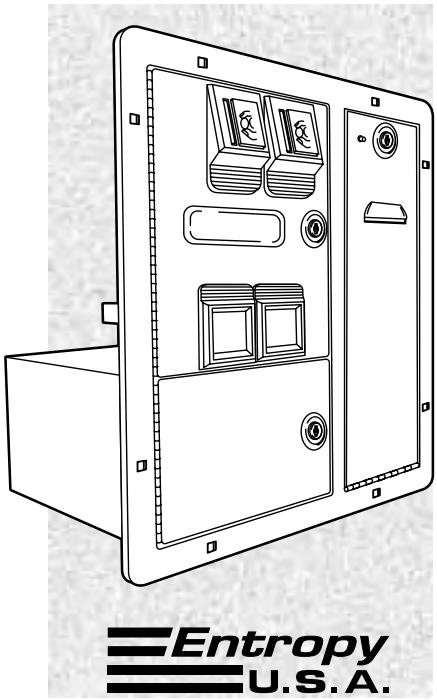

MOUNTING DIMENSIONS

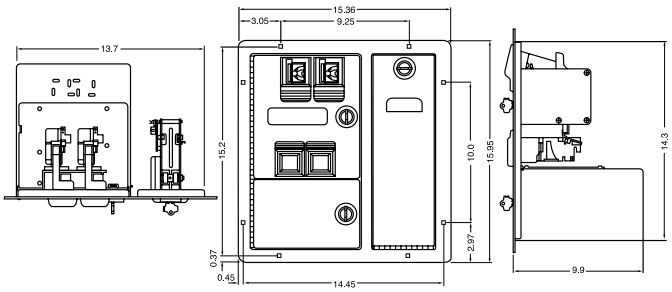

Part Number		Price per ea.	L/6
40-0406-25	Entropy Triple Door	144.60	138.60

REPLACEMENT PARTS FOR ENTROPY TRIPLE DOOR (See Following Page For Illustration)

Fig No.	Part Number	Entropy Number	Description	Price per ea.
1	42-0406-90	310-1025-18	Entry Plate	2.55
2	42-0406-91	310-1017	Button Housing	2.05
3	42-0406-109	310-1008	Main Door	19.30
4	_	27-1079	#6 x 1/4" Tapping Screw	_
5	_	27-4912	#8-32 Nut w/washer	_
6	42-0406-92	27-1061-3	Return Bezel	5.10
7	42-0406-93	27-1062	Return Flap	1.30
8	_	27-1016	Single Lock	_
9	_	31-1016	Locking Cam	_
10	_	27-1020	Washer for Cam	_
11	_	310-1006	Cash Door	_
12	42-0406-94	310-1014	Locking Arm	2.30
13	42-0406-95	310-1013	Locking Cam	3.60
14	42-0406-111	310-1005	Coin Box	13.95
15	_	310-1001	Frame & Enclosure	_
16	_	106-6022-00	Screw M3x0.5+4c	_
17	_	106-6005-00	Screw M3x0.5+4c	_
18	_	310-1002	Enclosure cover plate	_
19	_	106-6021-00	Screw M3x0.5x6	_
20	_	310-1027	Stop Bracket	_
21	42-0406-110	31-9T	TD Door	17.30
22	42-0406-96	310-1019	Button Cover	1.55
23	_	27-1041-64	Price Label	_
24	42-0406-97	310-1018	Button	3.60
25	42-0406-98	27-1039	Conical Spring	1.30
26	42-0406-99	310-1028	Inlet Chute	5.10
27	42-0406-106	310-1022	Retain Spring	1.05
28	42-0406-100	310-1023	Lever Arm	2.30
29	_	106-6003	4mm E-Ring	_
30	_	106-6024-00	Screw M3 x 12	_
31	42-0406-101	27-5703	Retainer	2.30
32	42-0406-102	106-6023-00	7mm E-Ring	1.05
33	42-0406-103	310-1024	Lamp Holder	2.30
34	_	213-01205	Lamp	_
35	_	106-6025-00	Screw M3 x 14	_
36	_	27-1025	Key Hook	_
37	_	27-1034	#6 Washer	_
38	_	03-7655-4	Wire Harness Clamp 1/4"	_
39	_	106-6026-00	Rivet	_
40	_	310-1011	Coin Box Cover	_
41	_	27-4907-2	Return Box Cover	_
42	_	27-1097	Switch Cover	_
43	_	27-1035	Washer for Wire Form	_
44	42-0406-104	27-1075	Wire Form	1.55
45	_	27-1094	Screw #4-40 x 7/8	_
46	_	27-1092	Micro Switch	_
47	42-0406-108	27-7301	Stop Blade	1.55
48	_	27-1087	Screw #6-32 x 5/8	_
49	_	27-1095	Nut 4-40	_
50	42-0406-107	27-5704	Acceptor Chute	6.15
51	_	27-1030	Small Bracket - Right	_
52	_	27-1031	Small Bracket - Left	_
53	_	27-1030	Small Bracket - Right	_
54	_	27-1031	Small Bracket - Left	_
55	_	27-11001	Screw & Spring Washer	_
56	_	27-4906-1	Return Box	_
57	_	310-1031	Coin Box Label	_
58	42-3536-00	310-1009	TD w/Downstacker Cutout	24.10

REPLACEMENT PARTS FOR ENTROPY TRIPLE DOOR 40-0406-25 - CONT.

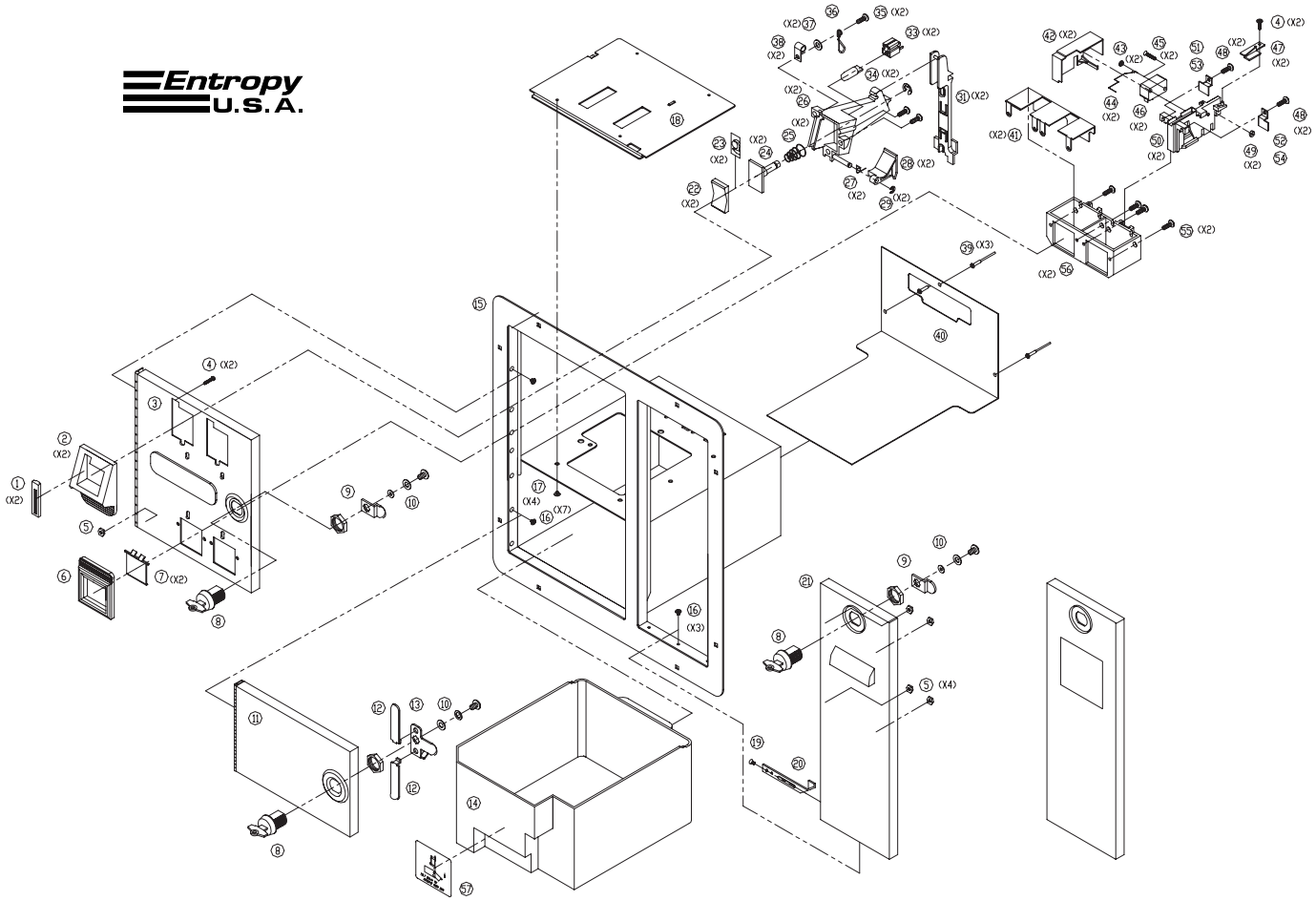

DOORS FOR BILL VALIDATORS – DOORS FOR MEI & ROWE VALIDATORS WITH STACKER COIN ACCEPTANCE

- Allows use of validators with stackers
- "Universal" Patented one-piece mech. holder design. Will fit **all** known 3" x 5" mechanical and electronic acceptors on the market. See page 253 for illustration
- Supplied with 25¢ coin mech but without validator
- For MEI VFM-(2 & 4), AL4, GL5, Series 2000, and LE Rowe UBA, and Dixie Narco U.S.A validators with upstackers, use 42-0161-00

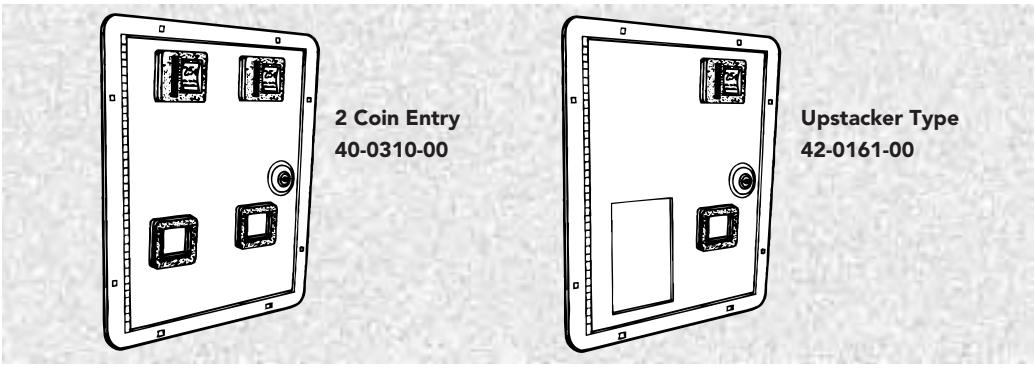

2 Coin Entry
40-0310-00

Upstacker Type
42-0161-00

Part Number		Price per ea.
42-0161-00	For Upstackers	96.40
40-0310-00	2-Coin Entry	114.45

MOUNTING DIMENSIONS

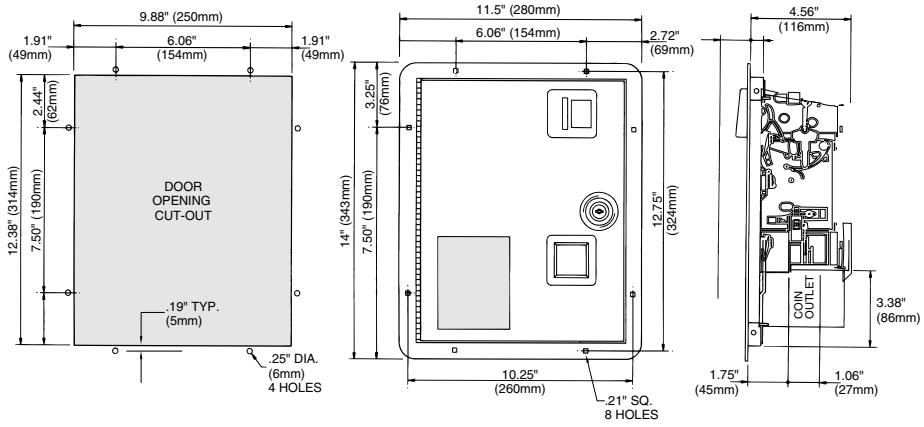

© HAPP CONTROLS

MID-WIDTH ACCESS DOOR

- Convenient door allows easy access to a tower PC or video boards
- Heavy-duty 14 gauge steel door
- Durable black powder coat finish
- Sturdy one-piece steel frame with door clips for installation into a video cabinet or kiosk
- Security ribs in frame prevent pry bar entry
- Mounting hardware included

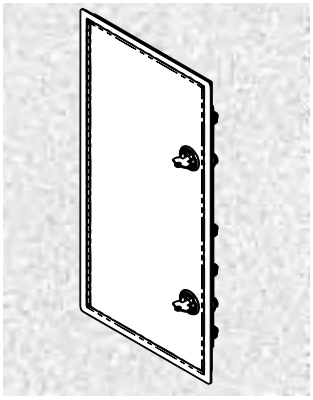

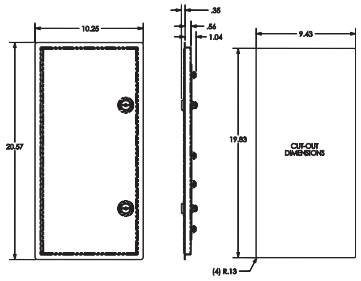

Part Number		Price per ea.
40-0652-00	Mid-Width Access Door	74.65

RECTANGLE BLANK DOOR

- Die cast metal frame
- May be used as a cashbox access door in conjunction with plastic cashbox 42-0769-00 on page 264

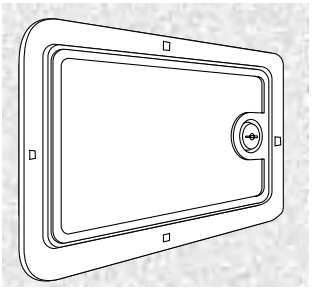

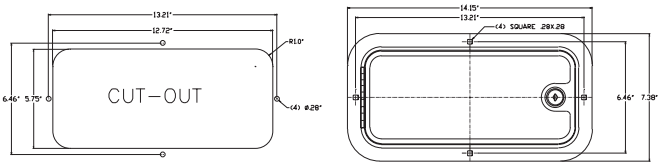

Part Number		Price per ea.	L/10
40-0520-00	Rectangle Blank Door	42.25	36.25

DO YOU WANT TO KNOW EACH TIME YOUR ORDER SHIPS OUT?

e-mail notification and order **tracking information** is now available from Happ Controls! Contact your sales representative or e-mail our customer service department at: **info@happcontrols.com** with your account information.

SMALL SINGLE COIN DOORS

- Sturdy one piece die cast metal frame
- "Universal" Patented one-piece mech. holder design. Will fit **all** known 3" x 5" mechanical and electronic acceptors on the market. See page 253 for illustration
- Heavy duty 16 gauge drawn steel door
- Industry standard mounting dimensions
- Mounting hardware included
- Foreign and token coin mechs available
- Fitted with 25¢ mech and 14V bulbs as standard

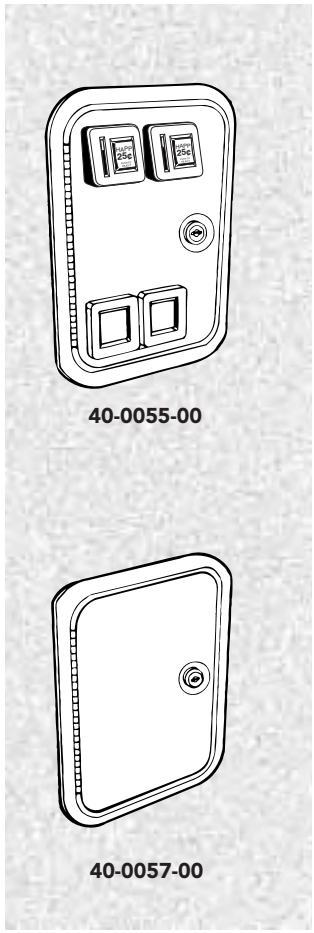

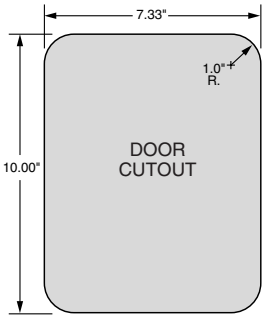

Part Number		Price per ea.	L/10
40-0055-00	Small Single Door - 2 Entry	65.55	61.80
40-0057-00	Small Single Door - Blank	24.10	21.70

SMALL SINGLE ENTRY COIN DOOR

- Ideal where space is limited
- Sturdy one-piece frame of die cast aluminum
- "Universal" Patented one-piece mech. holder design. Will fit **all** known 3" x 5" mechanical and electronic acceptors on the market. See page 253 for illustration
- Exclusive reject button design with unbreakable metal plunger

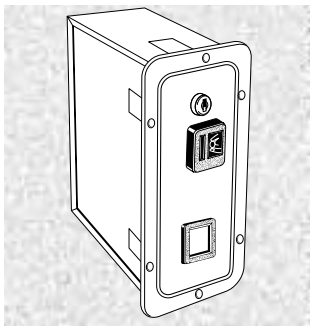

Part Number		Price per ea.
40-0484-00	Small Single Entry Coin Door with Full Metal Enclosure	96.40

CABINET ACCESS DOORS AND CASHBOXES

- Allow easy access to cabinet, cashbox, etc.
- Sturdy die cast aluminum frame; a Happ Controls exclusive
- Each door includes the frame assembly and lock.

A

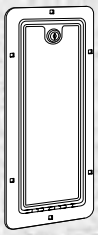

42-7050-00

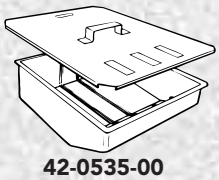

42-0535-00
(Cash Box Only)
42-0536-00
(Cover)

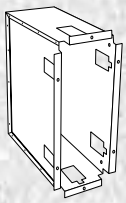

42-1311-00

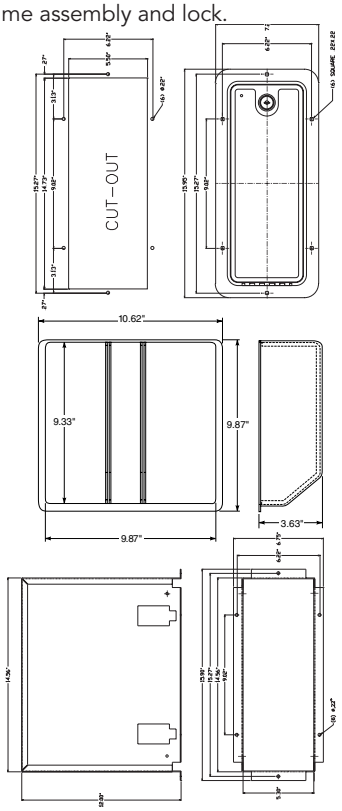

B

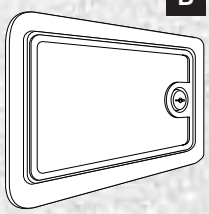

42-1150-00

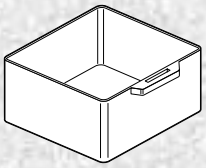

42-3306-00

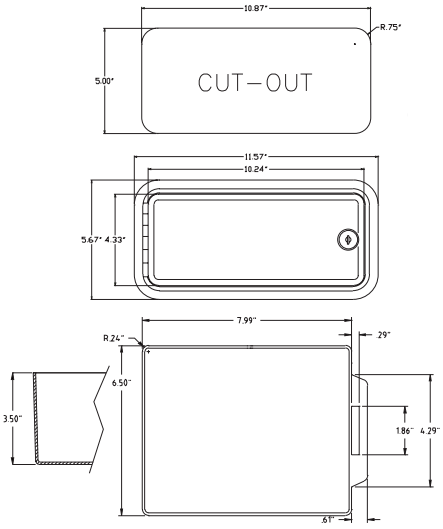

C

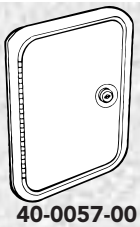

40-0057-00

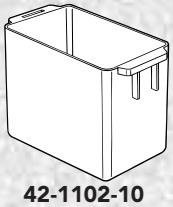

42-1102-10

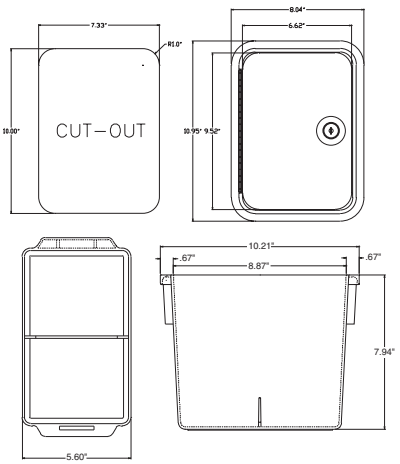

D

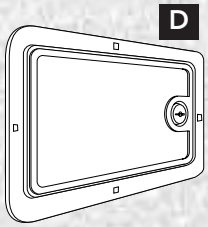

40-0520-00

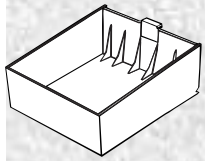

42-0769-00

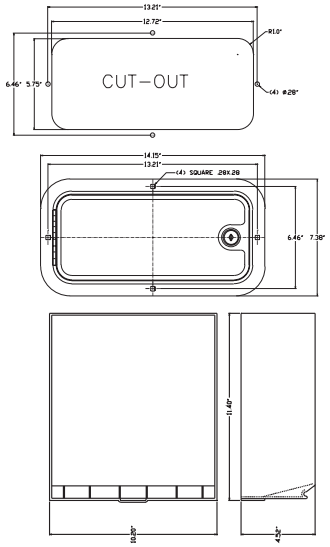

E

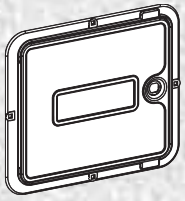

40-0706-00

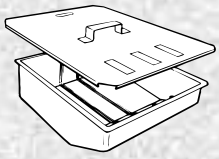

42-0535-00
(Cash Box Only)
42-0536-00
(Cover)

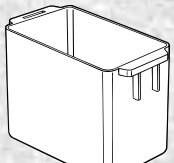

42-1102-10

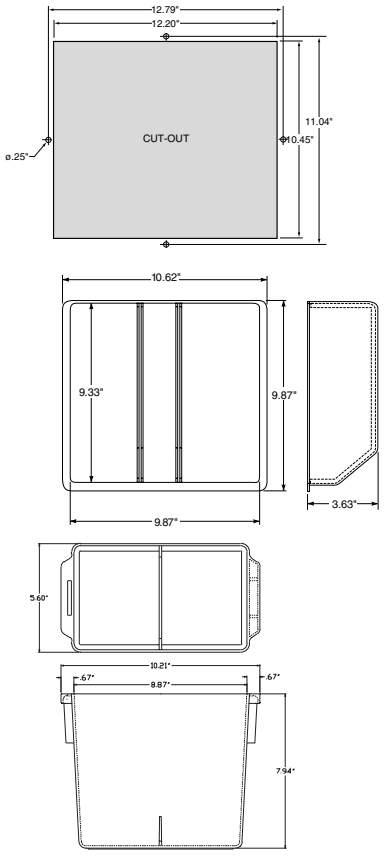

	Part Number		Price per ea.
A	42-7050-00	Access Door and Frame Assembly	37.45
	42-0535-00	Plastic Cashbox Only for Door 42-7050-00	9.15
	42-0536-00	Cashbox Cover Only	19.35
	42-1311-00	Metal Validator Vault for Door 42-7050-00	27.60
B	42-1150-00	Mini-Access Door and Frame Assembly	22.90
	42-3306-00	Plastic Cashbox for Door 42-1150-00	3.15
C	40-0057-00	Access Door and Frame Assembly	24.10
	42-1102-10	Plastic Cashbox for Door 42-0438-00	6.75
D	40-0520-00	Access Door and Frame Assembly	42.25
	42-0769-00	Plastic Cashbox for Door 42-1102-10	12.10
E	40-0706-00	Access Door and Frame Assembly	29.50
	42-1102-10	Plastic Cashbox for Door 42-0438-00	6.75
	42-0535-00	Plastic Cashbox Only for Door 42-7050-00	9.15
	42-0536-00	Cashbox Cover Only	19.35

© HAPP CONTROLS

CASHBOX SYSTEM III PINBALL TYPE

- Fits Stern/Data East Sega and Williams pinball games
- Estimated capacity: $1,500 U.S. Quarters

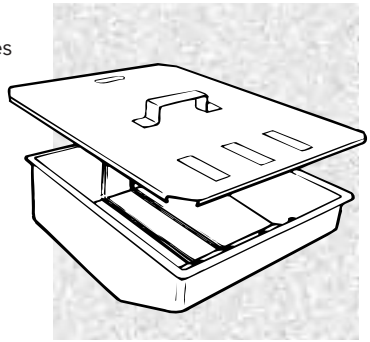

MOUNTING DIMENSIONS

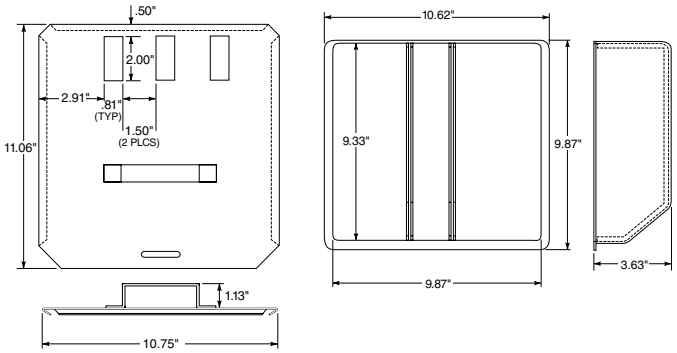

Part Number		Price per ea.	L/6
42-0536-00	Cashbox Cover, 2-3 entry	19.35	18.15
42-0535-00	Cashbox only	9.15	7.95

OVER/UNDER CASHBOX

- Estimated cashbox capacity: $1,350 U.S. Quarters

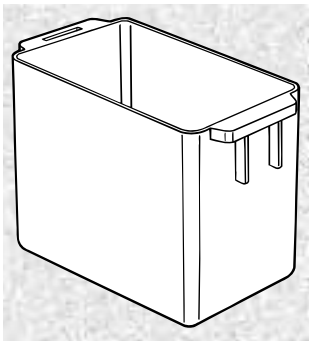

DIMENSIONS

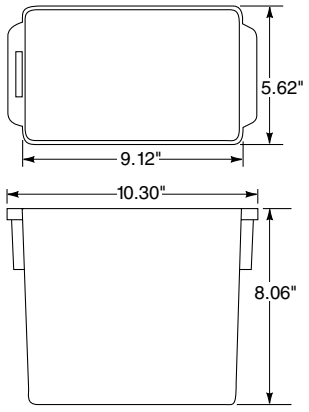

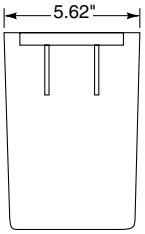

Part Number		Price per ea.	L/6
42-1102-10	Over/Under Cashbox	6.75	6.15

PLASTIC CASHBOX

- Injection Molded ABS Plastic
- Estimated cashbox capacity: over $2,000 U.S. Quarters

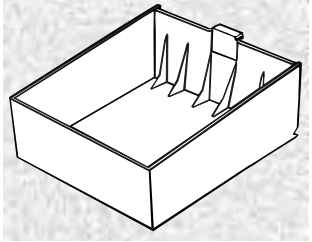

Part Number		Price per ea.	L/6
42-0769-00	Cashbox for Multi-player Over/Under Door	12.10	10.95

CASHBOX SYSTEM IV

- For multi-player type doors
- Uses easy to remove Pacman style coin box with integral handles
- Replaces all awkward and difficult to remove OEM style coin box assemblies on 2, 3 & 4 player games with 8-clamp door
- Easy to install – suspends from the doors two lower mounting bosses
- Estimated capacity: $1,500 U.S. Quarters

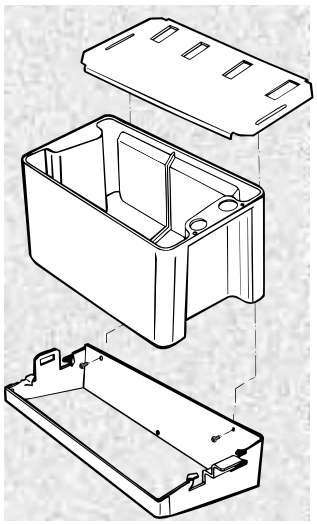

COVERS	BOX	HOLDER
2 SLOT 42-0601-00 3 SLOT 42-0600-00 4 SLOT 42-0599-00	42-0075-00	42-0598-00

DIMENSIONS

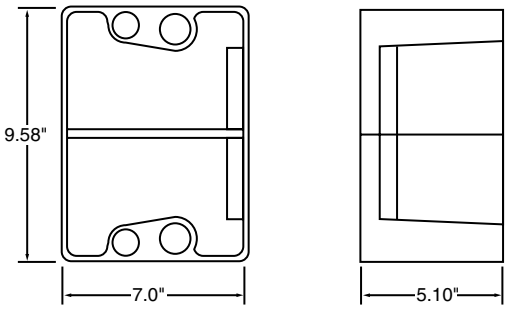

Part Number		Price per ea.	L/6
42-0605-00	Type IV 2-slot Cashbox Assembly (Holder, box & cover)	31.95	28.75
42-0606-00	Type IV 3-slot Cashbox Assembly (Holder, box & cover)	31.95	28.75
42-0607-00	Type IV 4-slot Cashbox Assembly (Holder, box & cover)	31.95	28.75
42-0075-00	Cashbox Type 1	7.25	6.75

OVER/UNDER CASHBOX REDUCED DEPTH

- Estimated cashbox capacity: $900 US Quarters

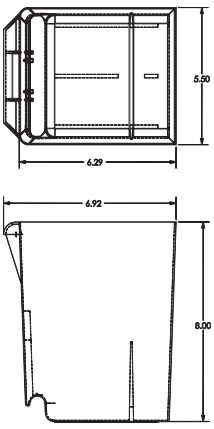

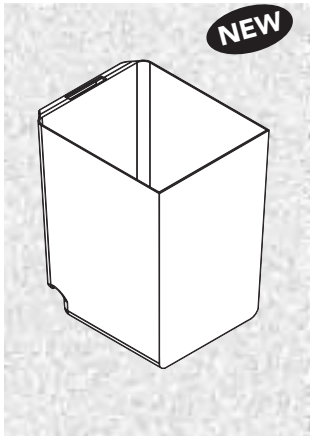

Part Number		Price per ea.	L/6
025X3731-001	Over/Under Cashbox Reduced Depth	17.00	14.80

SIDE MOUNT COIN ACCEPTOR BOX – SINGLE & DUAL

Side Mount Coin Acceptor Box

- Clean and easy bolt on design to add coin acceptance to almost any application
- Coinbox capacity $250 in U.S. quarters
- "Universal" Patented one-piece mech. holder design. Will fit **all** known 3" x 5" mechanical and electronic acceptors on the market. See page 253 for illustration
- Fitted with $.25 U.S. mech. and coin switch as standard
- Includes mounting hardware

Dual Side Mount Coin Acceptor Box

- Clean and easy bolt-on design to add coin acceptance to almost any application
- Coinbox capacity: $750 in U.S. Quarters
- Patented one-piece mech holder design
- Fitted with $.25 U.S. mech and coin switch as standard
- Includes mounting hardware:
  (4) 90-1208-00 1/4 Flat Washer
  (4) 90-1209-00 1/4-20 Hex Nut
  (4) 43-0156-00 Screw Head
  1/4-20 x 1/2 Hex Cap

AVAILABLE FOR VALIDATORS

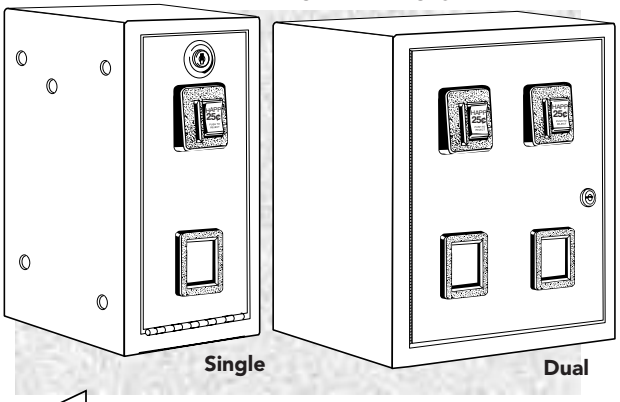

MECH HOLDER PARTS	
MECH HOLDER W/COIN SWITCH	42-3319-00
MECH HOLDER W/O COIN SWITCH	42-7355-00
COIN SWITCH	42-7087-00
SCREW FOR COIN SWITCH	43-0136-00
METAL CLIP	42-7338-91
THUMBSCREW FOR METAL CLIP	42-7338-90

SINGLE VERSION PICTURED

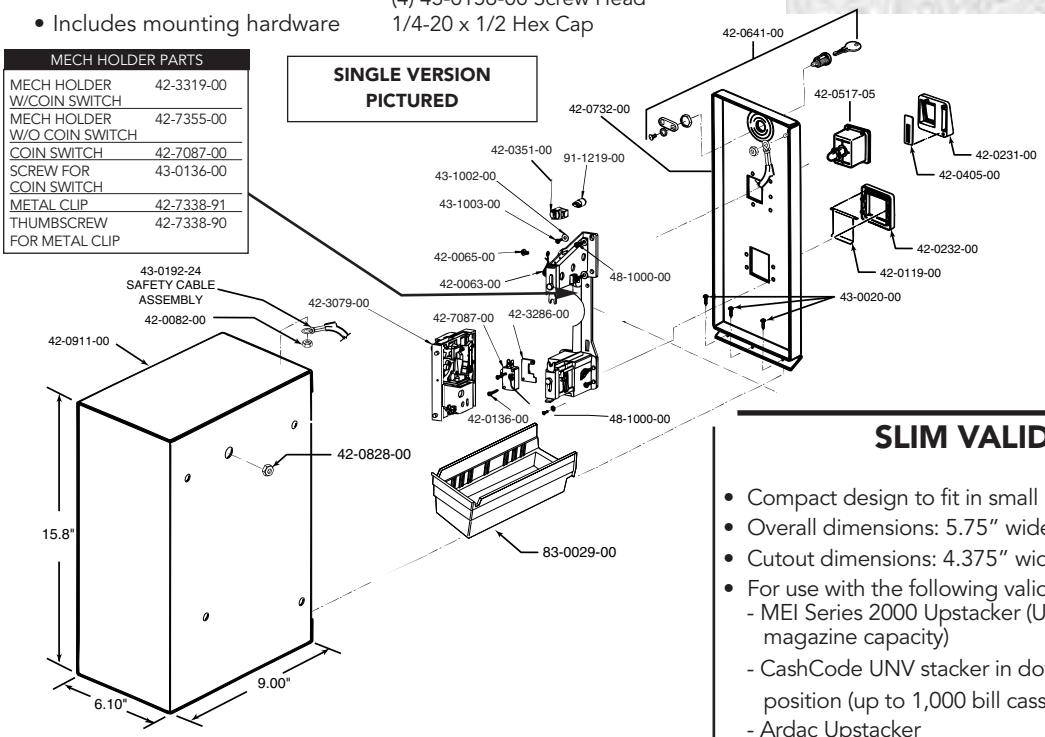

Part Number		Price per ea.
40-0283-01	Single Side Mount Cashbox	183.55
40-0360-00	Dual Side Mount Cashbox	306.65

SLIM VALIDATOR DOOR

- Compact design to fit in small mounting area
- Overall dimensions: 5.75" wide x 22.25" high
- Cutout dimensions: 4.375" wide x 21" high
- For use with the following validators:
  - MEI Series 2000 Upstacker (Up to 700 bill magazine capacity)
  - CashCode UNV stacker in downstacker position (up to 1,000 bill cassette)
  - Ardac Upstacker

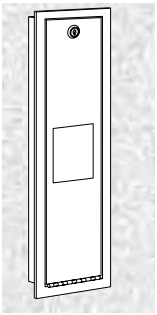

Part Number		Price per ea.	L/6
40-0401-00	Slim Validator Door	43.40	41.70

SLIM COIN DOOR

- Compact design to fit in small mounting area
- Fitted with 14v lamp and $.25 U.S. mech as standard
- "Universal" Patented one-piece mech. holder design. Will fit **all** known 3" x 5" mechanical and electronic acceptors on the market. See page 253 for illustration
- Lower lockable and removable cashbox has estimated capacity of $750 in U.S. Quarters
- Overall dimensions: 5.75" wide x 22.25" high
- Cutout dimensions: 4.375" wide x 21" high

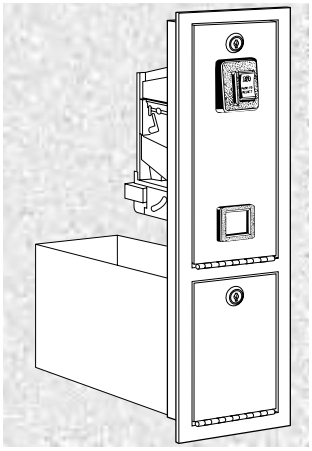

Part Number		Price per ea.	L/6
40-0400-00	Slim Coin Door	113.30	108.50

SLIM TICKET DOOR

- Compact design to fit in small mounting area
- Comes with ticket bin to hold 4,000 tickets
- Overall dimensions: 5.75" wide x 22.25" high
- Cutout dimensions: 4.375" wide x 21" high
- Each ticket door includes one ticket dispenser label (42-1378-00)

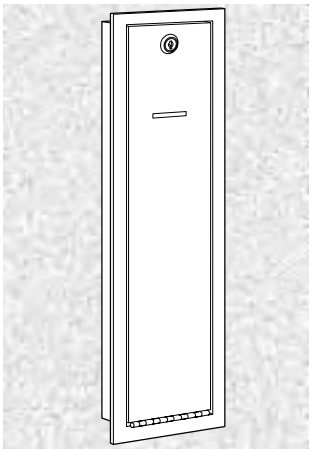

Part Number		Price per ea.	L/6
40-0390-00	Slim Ticket Door w/4,000 Ticket Bin	78.40	69.90

© HAPP CONTROLS

DOORS FOR BILL VALIDATORS

- Great way to increase the earnings on any piece of equipment
- Ideal for use where space is limited
- MEI (GL, VFM, AL) and Rowe require either "Right" or "Left" Hand versions, depending on which side the control box is mounted (600 Bill Capacity Stacker Max.)
- CashCode, Dixie Narco and MEI (AE & VN) require "Center" version
- For additional security, simply add Metal Vault (42-1311-00) to these doors
- Validators sold separately

MOUNTING DIMENSIONS
ALL BILL VALIDATOR STYLE DOORS

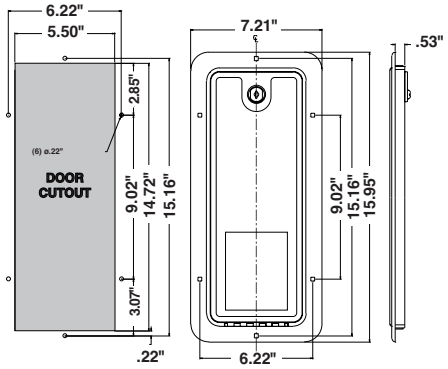

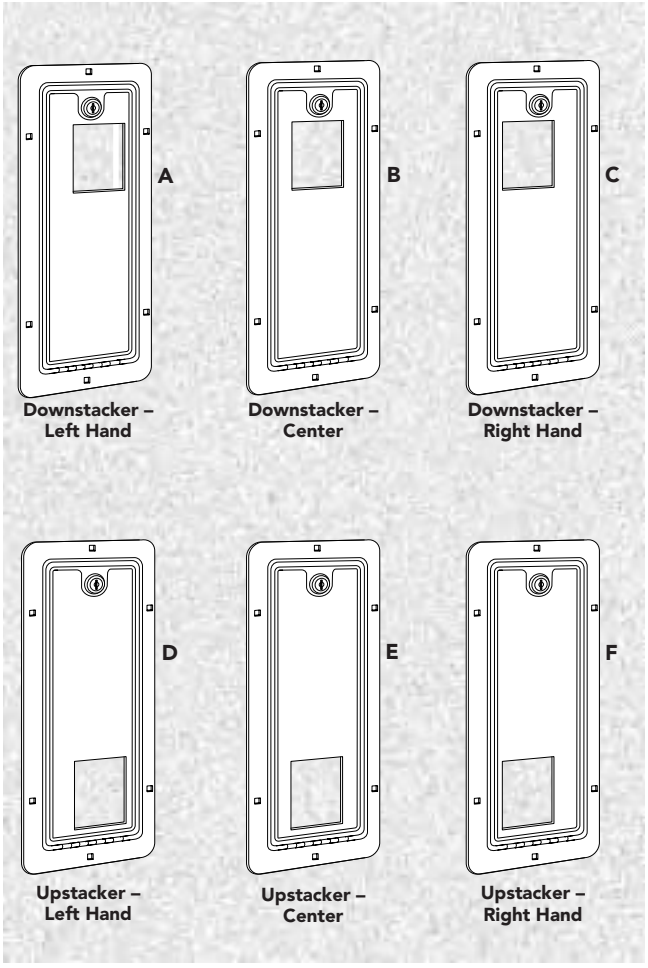

Part Number	Key	Validator Door	Price per ea.	L/6
42-1395-00	A	Downstacker, Left Hand	42.25	39.85
42-1394-00	B	Downstacker, Center	42.25	39.85
42-1393-00	C	Downstacker, Right Hand	42.25	39.85
42-1392-00	D	Upstacker, Left Hand	42.25	39.85
42-1391-00	E	Upstacker, Center	42.25	39.85
42-1390-00	F	Upstacker, Right Hand	42.25	39.85

ENCLOSURE FOR BILL VALIDATORS

- Allows bill validator to be added to any piece of equipment
- Will accept all MEI stackerless and downstacker validators including LE downstacker with 600 capacity LRC (lockable removable cassette)
- Can be mounted to the left or right side of any piece of equipment
- Black epoxy powder painted

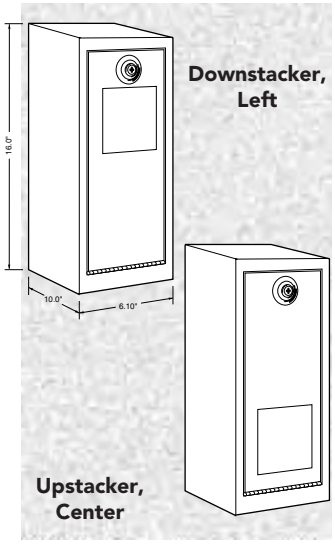

Part Number		Price per ea.	L/12
40-0157-00	Enclosure for Bill Validators, Downstacker Versions, Left	90.40	84.45
40-0157-01	Enclosure for Bill Validators, Upstacker Versions, Left	88.60	82.75
40-0448-01	Enclosure for Bill Validators for Downstacker CashCode and MEI AE & VN Validators, Center	88.60	82.75
40-0448-00	Enclosure for Bill Validators for Upstacker CashCode and MEI AE & VN Validators, Center	88.60	82.75

METAL VALIDATOR VAULT

- Offers additional security to doors for bill validators
- Thick gauge material prevents possibility of "reaching-in" to grab full stacker from bill validator
- Easy to install, simply bolt on with same carriage bolts used to mount door to cabinet
- 5.30" wide x 12" deep x 14.42" tall

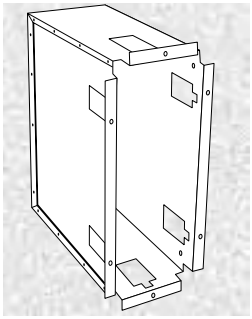

Part Number		Price per ea.	L/10
42-1311-00	Metal Validator Vault	27.60	25.70

BLANKING PLATE FOR DOOR CUTOUT

- For use with ticket dispenser and bill validator type doors
- Covers hole where door has been removed
- Black finish – blends in with equipment
- Easy installation with bolts (sold separately)
- Size: 16.05" high x 7.09" wide

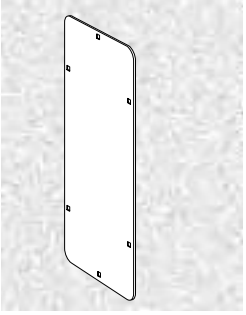

Part Number		Price per ea.
42-0663-00	Blanking Plate for Door Cutout	19.35

SINGLE FRONT PLATE ASSEMBLY

- Industry standard mounting dimensions
- Illuminated coin denomination reject button includes metal plunger
- Available with mechs to accept foreign coins or tokens
- "Universal" Patented one-piece mech. holder design. Will fit **all** known 3" x 5" mechanical and electronic acceptors on the market. See page 253 for illustration
- Available with lockout coil

* Reject Push Button sold as assembly only. See page 216 for Denomination Insert Selection

- Fitted with $.25 US mech

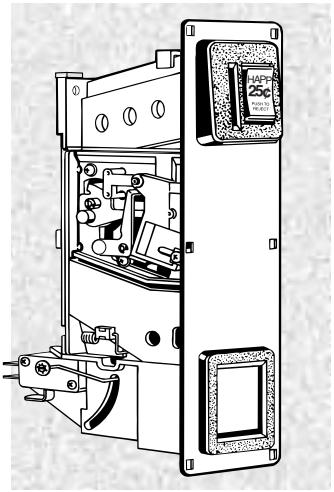

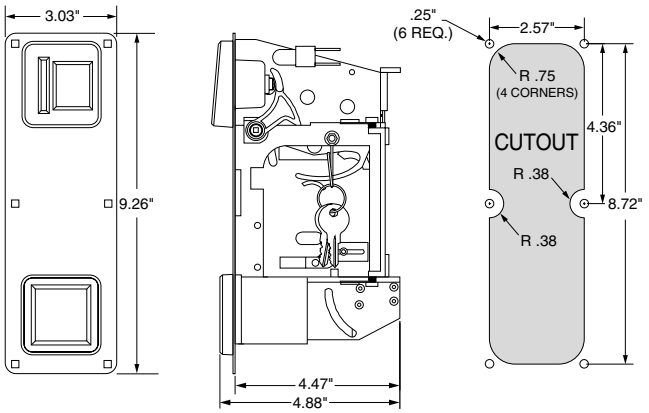

MECH HOLDER PARTS	
MECH HOLDER W/COIN SWITCH	42-3371-00
MECH HOLDER W/O COIN SWITCH	42-7355-00
COIN SWITCH	42-7087-00
SCREW FOR COIN SWITCH	43-0136-00
METAL CLIP	42-7338-91
THUMBSCREW FOR METAL CLIP	42-7338-90

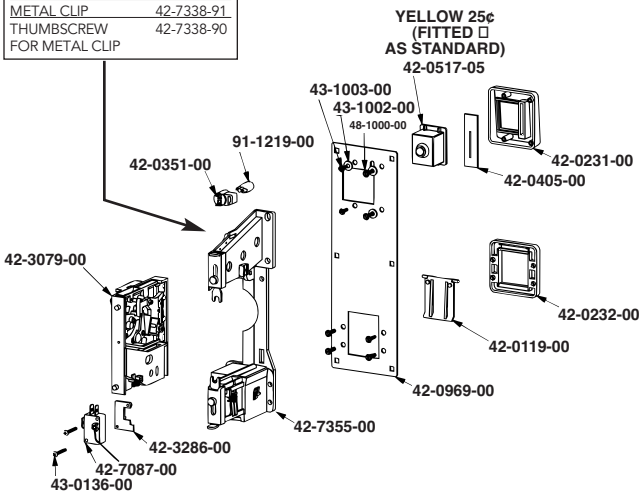

Part Number		Price per ea.	L/6
40-0023-00P	Single Front Plate Assembly	30.80	29.60

DUAL FRONT PLATE ASSEMBLY

- Industry standard mounting dimensions
- Illuminated coin denomination reject button includes metal plunger
- Available with mechs to accept foreign coins or tokens
- "Universal" Patented one-piece mech. holder design. Will fit **all** known 3" x 5" mechanical and electronic acceptors on the market. See page 253 for illustration
- Available with lockout coil

* Reject Push Button sold as assembly only. See page 216 for Denomination Insert Selection

- Fitted with $.25 US mech

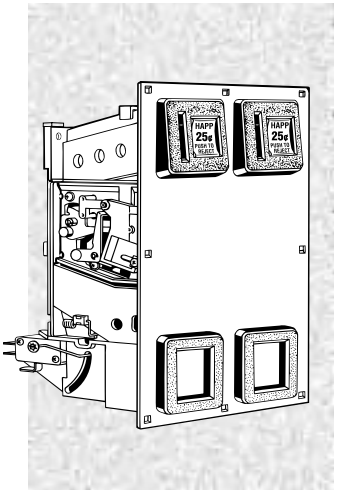

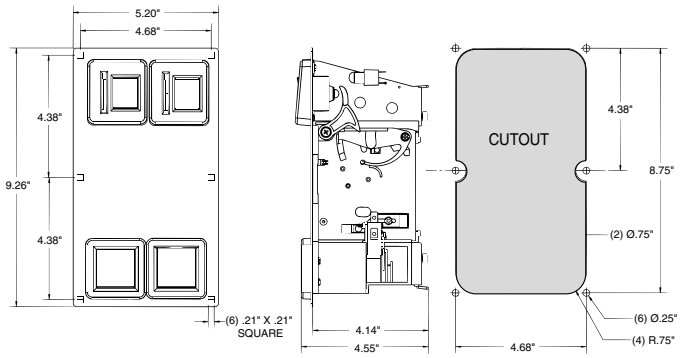

MECH HOLDER PARTS	
MECH HOLDER W/COIN SWITCH	42-3371-00
MECH HOLDER W/O COIN SWITCH	42-7355-00
COIN SWITCH	42-7087-00
SCREW FOR COIN SWITCH	43-0136-00
METAL CLIP	42-7338-91
THUMBSCREW FOR METAL CLIP	42-7338-90

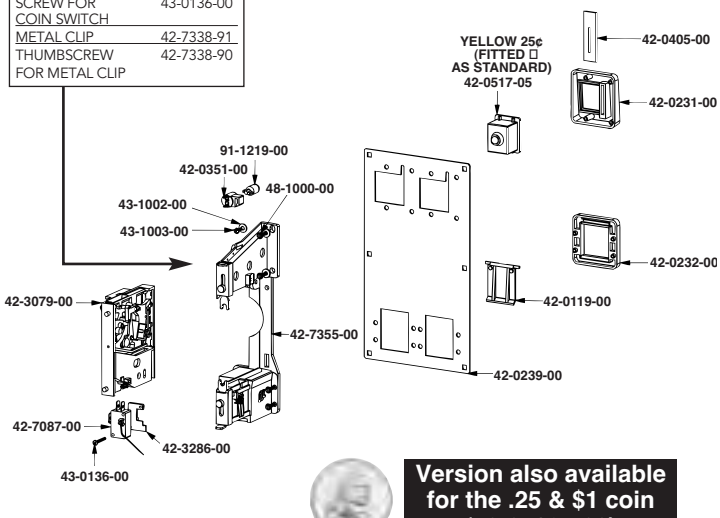

Version also available for the .25 & $1 coin (40-0168-100)

Part Number		Price per ea.	L/6
40-0168-00	Dual Front Plate Assembly	66.30	60.35

© HAPP CONTROLS

MINI FRONT PLATE ASSEMBLY

- Industry standard mounting dimensions (Roll down acceptor types)
- Accepts U.S. 25¢ coin as standard
- Available to accept foreign coins or tokens (Call for P/N)
- Exclusive new mech holder design
- Optional coin lock out coil assembly available

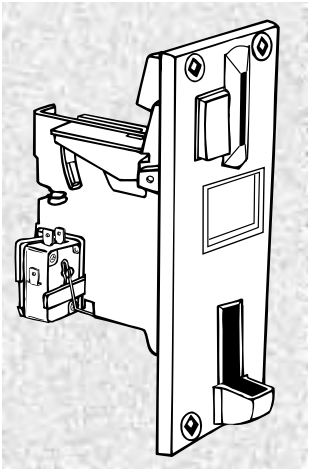

MOUNTING DIMENSIONS

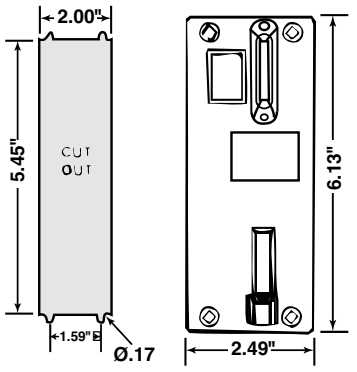

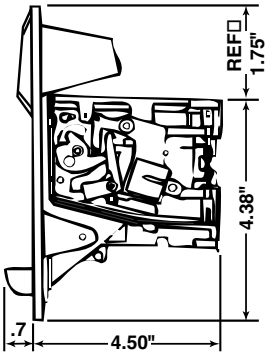

Part Number		Price per ea.	L/6
40-0229-00	Mini Front Plate Assembly w/o Lockout Coil	42.25	38.65
42-1147-00	Coin Switch w/Wire Only	3.15	-

COIN TIMER BOX WITH U.S. QUARTER COIN MECH

- Manufactured by Coin Mechanisms
- Completely self-contained coin box system
- Accepts industry standard mechanical and electronic mechanisms
- Standard with U.S. quarter mechanical coin mechanism
- Silver vein durable epoxy paint finish
- Coin insert has polished chrome finish
- Quick release latches for easy mechanism removal
- UL recognized
- Dimensions: 7.31" W x 11.75" H x 3.82" D

Applications
Kiddie rides, water dispensers, campground showers, tennis court lights, Internet Kiosks, foot massager/chair massager

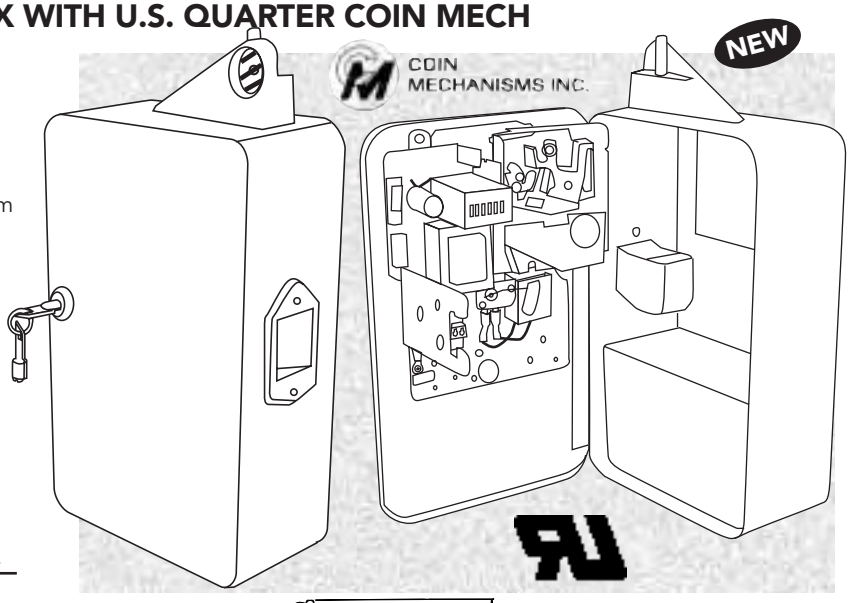

Part Number		Price per ea.
42-3549-00	Coin Timer Box	215.00

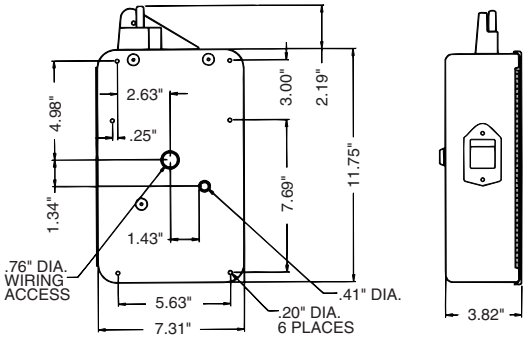

ELECTRONIC ROLL DOWN ACCEPTOR WITH REJECT LEVER

- To change the coin you wish to accept, simply lift up the retaining bracket and insert new sample coin and the mech. will accept only that coin
- Accepts coins based on the coins diameter size, thickness and material content
- Capable of accepting a wide variety of coins and tokens:
  Coin Dia. Size: 18 mm to 31 mm (.708" to 1.22")
  Coin Thickness: 1.2 mm to 3.0 mm (.0472" to .1181")
- 3-way adjustable timing switch for coin output 22 ms/ 45 ms/65 ms
- Adjustable sensitivity to eliminate acceptance of high quality slugs
- Easy installation
- Requires +12vdc

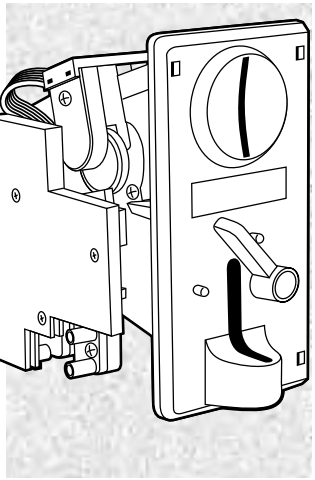

MOUNTING DIMENSIONS

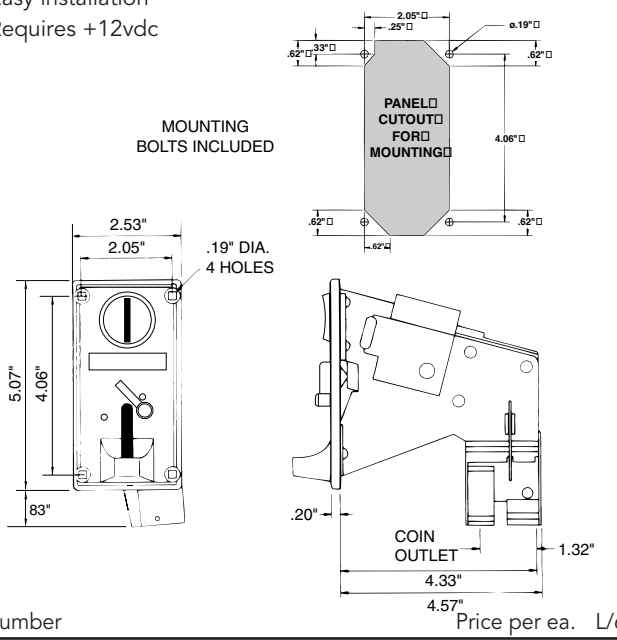

Part Number		Price per ea.	L/6
40-1500-01	Electronic Roll Down Acceptor with Reject Lever	54.30	53.40

S-1 ROLL DOWN ACCEPTOR

NEW

- Built-in security devices guard against fraud
- Coin or token sizes between 17mm to 30mm
- Checks for diameter, thickness, metal content, washers and stringing
- Suitable for gaming, vending, car washes, and kiddie rides
- High level of discrimination
- Compact, durable and easy to install
- Includes black coin switch

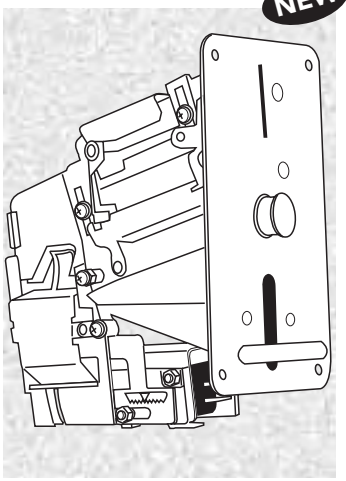

MOUNTING DIMENSIONS

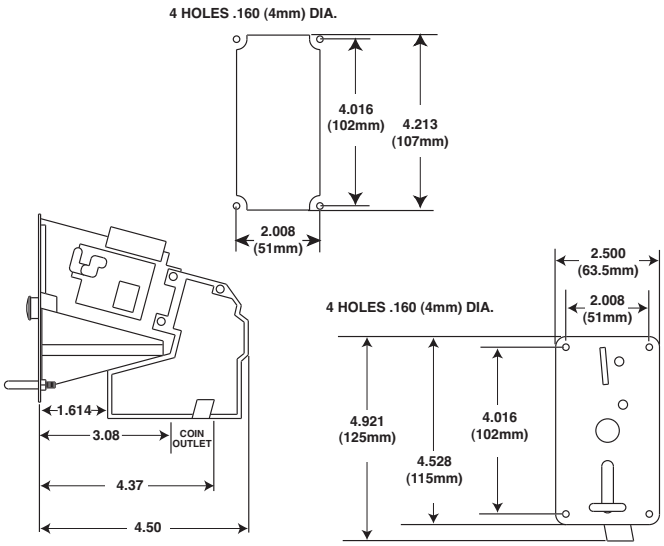

Part Number		Price per ea.
830-4060-01	S-1 Roll Down Acceptor	38.00

Part Number		Lockout Coil	Price per ea.
830-4060-01	$.25 S-1 Roll Down Acceptor	No	38.00
830-4062-01	$.25 S-1 Roll Down Acceptor	Yes	52.05
831-4060-01	$.25 S-1 Roll Down Acceptor (2 Entry)	No	67.65
830-4061-07	$.25 & .984" Token S-1 Roll Down Acceptor	No	52.05
WGD30-4060-26	$.25 Canadian S-1 Roll Down Acceptor	No	52.05
830-4060-30	$1.00 Canadian S-1 Roll Down Acceptor	No	24.95
830-4060-50	5 Shekel Israel S-1 Roll Down Acceptor	No	38.00
830-4060-55	10 Shekel Israel S-1 Roll Down Acceptor	No	38.00
830-4060-92	.900" S-1 Roll Down Acceptor	No	38.00
830-4060-93	.984" S-1 Roll Down Acceptor	No	38.00
830-4060-94	1" S-1 Roll Down Acceptor	No	31.20
830-4060-95	1.125" S-1 Roll Down Acceptor	No	38.00
893-0103-00	U-Bolt S-1 w/o Nut or Washer	-	.89
893-0109-00	Slider Bar for S-1 $.25	-	1.45
893-0121-00	Lockout Arm for S-1	-	6.50
893-0122-00	Lockout Coil Assy. for S-1 12vdc	-	23.25
893-0124-00	Lockout Bracket for S-1	-	1.60
893-0128-00	Lockout Screw for S-1 Metal	-	.32
893-0133-00	Gate Assembly for S-1 (SUF/011)	-	20.85
893-0118-10	Microswitch Assy. Red S-1 Metal (MSW/034)	-	11.50
893-0118-11	Microswitch Assy. White S-1 Metal (MSW/035)	-	11.50
893-0118-16	Microswitch Assy. Black S-1 Metal (MSW/036)	-	14.10
893-0120-10	Microswitch Assy. Red S-1 Plastic (MSW/010)	-	11.50
893-0120-16	Microswitch Assy. Black S-1 Plastic (MSW/007)	-	11.50

© HAPP CONTROLS

ROLL DOWN ACCEPTOR

- Rugged all die cast construction
- Durable plated finish
- Integral coin entry guide and reject slot
- Has anti-string tippler
- Fitted with standard U.S. coin switch
- Optional coin lock out coil assembly available
- Adjustable to suit any coin size .984, .900, .882, etc.

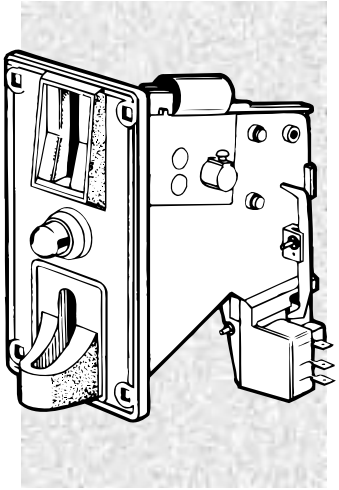

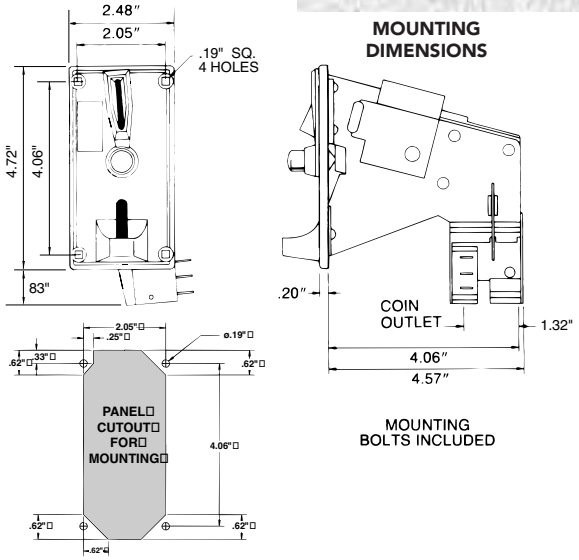

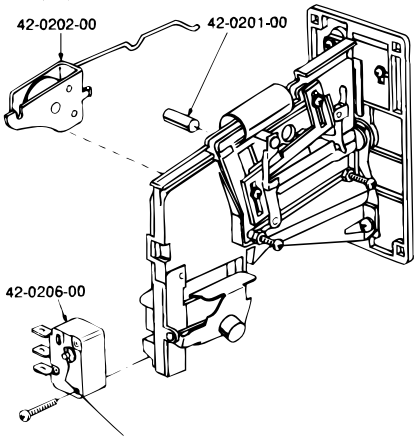

Part Number		Price per ea.
40-0347-00	Roll Down Acceptor with Lock $.25 US	49.35
40-0309-00	Roll Down Acceptor with Lock .800"Token	49.20
40-0298-00	Roll Down Acceptor with Lock .900"Token	49.20
40-0307-00	Roll Down Acceptor with Lock .984"Token	49.20
40-0304-00	Roll Down Acceptor with Lock 1" Token	49.20
40-0347-10	Roll Down Acceptor with Lock $.25 US with 12vdc Lockout Coil	72.35
40-0694-10	Roll Down Acceptor with Lock $.25 US & .984" Token with 12vdc Lockout Coil"	44.40
40-0322-00	Roll Down Acceptor with Lock $1.00 Australian	49.20

ROLL DOWN ACCEPTOR WITH LOCK

- Stainless steel mounting plate with lock allows for easy access to mech
- Rugged all die cast construction
- Durable plated finish
- Integral coin entry guide and reject slot
- Has anti-string tippler
- Fitted with standard U.S. coin switch
- Optional coin lock out coil assembly available
- Adjustable to suit any coin size .984, .900, .882, etc.
- Lock provides easy access for service

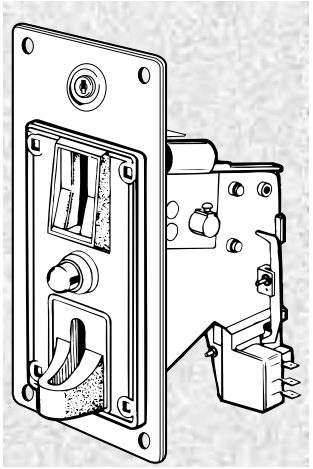

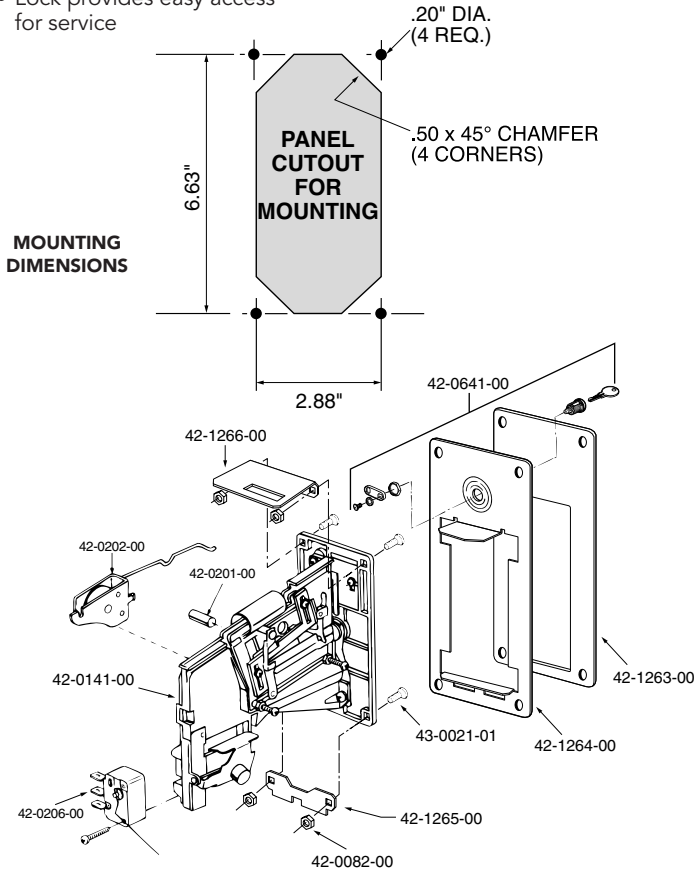

Part Number		Price per ea.
40-0132-00	Roll Down Acceptor $.05 US	33.35
40-0012-00	Roll Down Acceptor $.25 US	30.15
40-0137-00	Roll Down Acceptor .882" Token	30.35
40-0078-00	Roll Down Acceptor .900" Token	31.65
40-0108-00	Roll Down Acceptor .984" Token	31.70
40-0109-00	Roll Down Acceptor 1" Token	31.70
40-0694-00	Roll Down Acceptor $.25 US & .900" Token	35.00
40-0161-00	Roll Down Acceptor $1.00 New Peso	31.95
40-0042-00	Roll Down Acceptor $.25 US with 12vdc Lockout Coil	44.40
40-0136-02	Roll Down Acceptor .900" Token with 12vdc Lockout Coil	43.40
40-0107-01	Roll Down Acceptor $1.00" Canadian with 12vdc Lockout Coil	43.25

HAPP ULTIMECH $.25 USA COIN MECH

- Mech utilizes plastic base plate, cradles, gate and coin return chute
- Exclusive cradle design discerns between good and counterfeit coins
- Each mech equipped with anti-stringing device
- Materials carefully chosen for optimum performance and durability
- Color: Black plastic
- Over 99% acceptance of $.25
- Rejects most known false coins

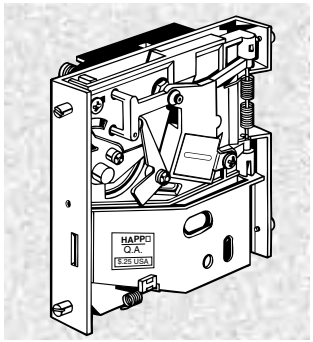

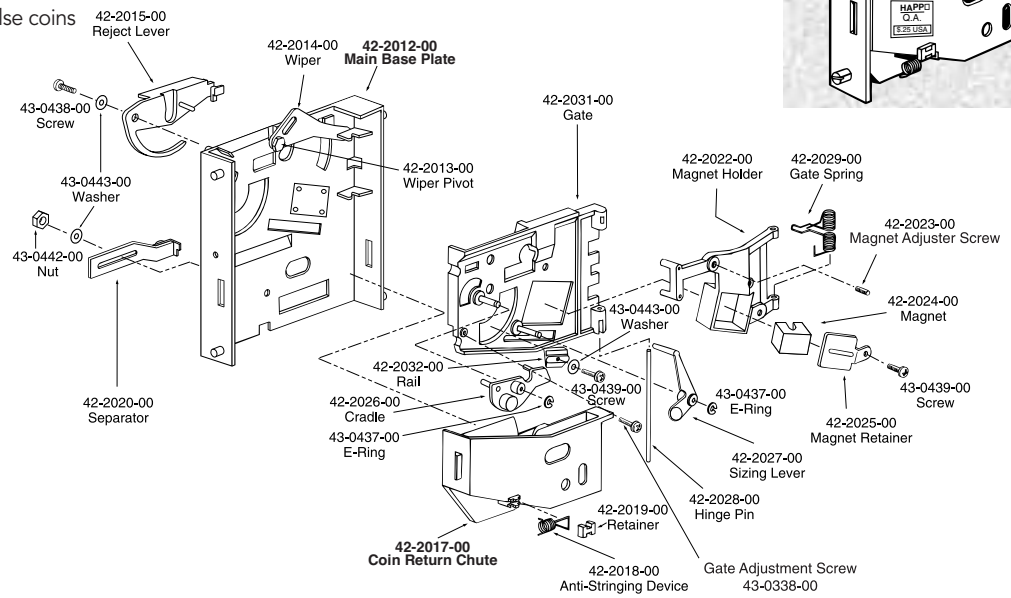

Part Number		Price per ea.	L/6
42-3079-00	Happ Ultimech Coin Mech w/Magnet	14.10	12.25

HAPP METAL $.25 USA COIN MECH

- Mech utilizes metal base plate, metal cradles, plastic gate and coin return chute
- Each part made with great precision to produce a mech that is highly able to separate good coins from counterfeit coins
- Material used for each part carefully chosen to give optimum performance and durability
- High strength rare earth Neodymium magnet used to enhance mechs ability to reject false coins while accepting good coins
- Each mech equipped with anti-stringing device
- Each mech fully tested and inspected

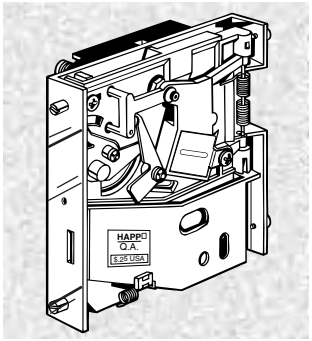

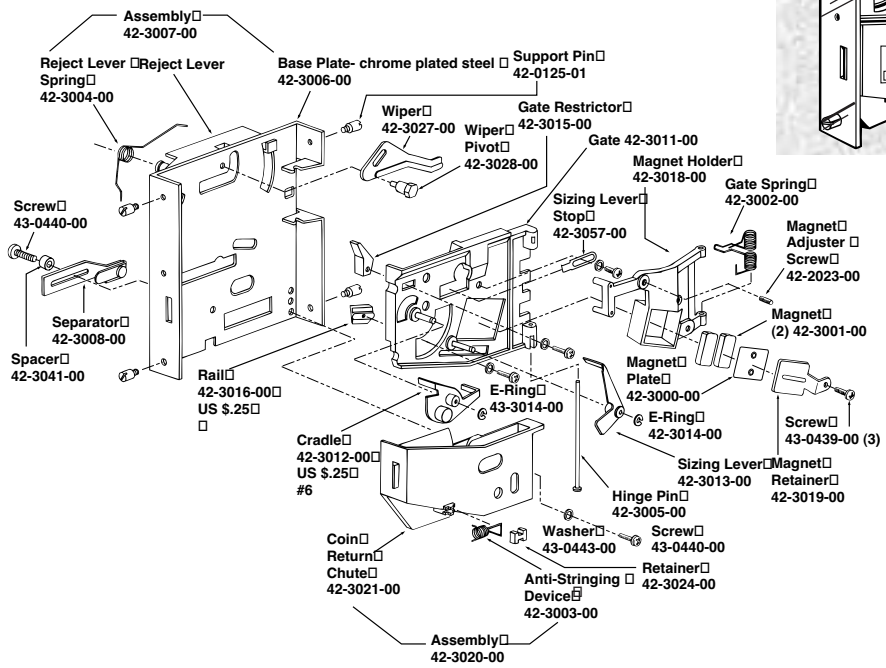

Part Number		Price per ea.	L/6
42-3050-00	Happ Metal $.25 USA Coin Mech	20.30	19.30

© HAPP CONTROLS

HAPP METAL COIN MECH

- Mech utilizes metal base plate, metal cradles, plastic gate and coin return chute
- Each part made with great precision to produce a mech that is highly able to separate good coins from counterfeit coins
- Materials used for each part carefully chosen for optimum performance and durability
- High strength rare earth Neodymium magnet used to enhance mechs ability to reject false coins while accepting good coins
- Each mech equipped with anti-stringing device
- Each mech fully tested and inspected
- Additional coin versions are available upon request

Dollar Coin Version Available (42-7466-00)

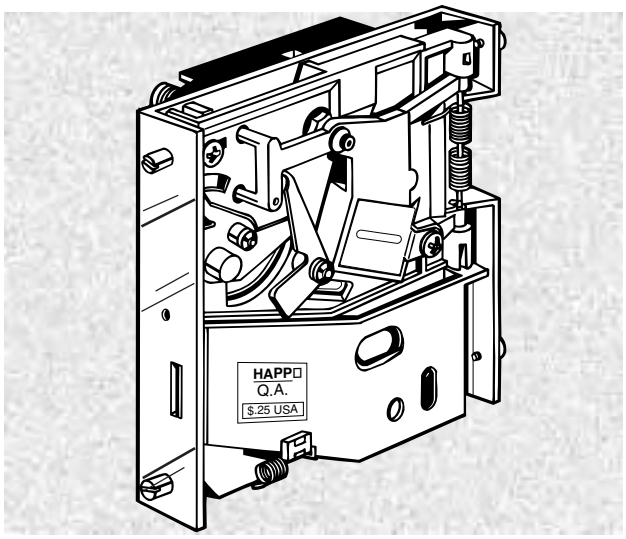

Part Number		Price per ea.	L/6
42-3039-00	$1.00 Australia Coin Mech	20.30	19.30
42-7466-00	$1.00 USA Coin Mech (Golden Dollar & SBA Dollar coin)	20.30	19.30
42-3050-00	$.25 USA Coin Mech	20.30	19.30
42-3054-00	$.25 Canadian Coin Mech	20.30	19.30
42-3066-00	$1.00 Canadian Coin Mech	20.30	19.30
42-3059-00	50 CTV Mexico Coin Mech	20.30	19.30
42-3065-00	N1.00 Mexico Coin Mech	20.30	19.30
42-3072-00	Aladdin's token .852" Coin Mech	20.30	19.30
42-3061-00	.800" Token Coin Mech	20.30	19.30
42-3062-00	.882" Token Coin Mech	20.30	19.30
42-3052-00	.900" Token Coin Mech	20.30	19.30
42-3053-00	.984" Token Coin Mech	20.30	19.30
42-3070-00	$.25 & .984" QST Token Coin Mech	20.30	19.30

Part Number		Price per ea.	1-5	L/6
42-3063-00	1.00" Token Coin Mech		20.30	19.30
42-3064-00	1.125" Token Coin Mech		20.30	19.30
42-3069-00	100 Yen Japan		20.30	19.30
42-3078-00	5DM German Coin Mech		20.30	19.30
42-3067-00	500 Won Korea Coin Mech		20.30	19.30
42-7250-00	$.20 Australia Coin Mech		20.30	19.30
42-7254-00	5 Kroner Norway Coin Mech		20.30	19.30
42-7255-00	10 Kroner Norway Coin Mech		20.30	19.30
42-7259-00	10 Francs France Coin Mech		20.30	19.30
42-7260-00	1 Franc Switzerland Coin Mech		20.30	19.30
42-7264-00	5 Kroner Denmark Coin Mech		20.30	19.30
42-7265-00	10 Kroner Denmark Coin Mech		20.30	19.30

HAPP ULTIMECH COIN MECH

- Mech utilizes plastic base plate, cradles, gate and coin return chute
- Exclusive cradle design discerns between good and counterfeit coins
- Each mech equipped with anti-stringing device
- Materials carefully chosen for optimum performance and durability
- Color: Black plastic
- Over 99% acceptance
- Rejects most known false coins

Dollar Coin Version Available (42-3113-00)

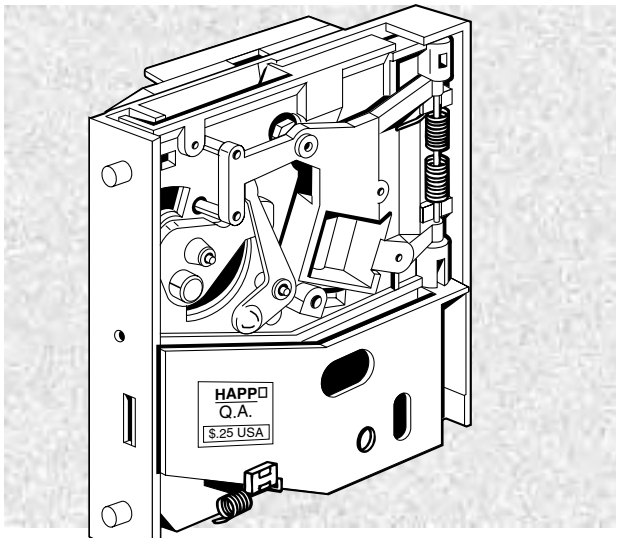

Part Number		Price per ea.	L/6
42-3113-00	Ultimech for $1.00 USA (Golden Dollar and SBA Dollar Coin)	14.85	14.85
42-3110-00	Ultimech for .882" Token	14.10	12.25
42-3111-00	Ultimech for .900" Token	14.10	12.25
42-3112-00	Ultimech for .984" Token	14.10	12.25
42-3045-00	Ultimech for 50 CTV Mexico	14.10	12.25

IMONEX® COIN MECH

- Latest technology reduces coin jam related service calls
- Reliable – no moving parts
- Reduces machine down time and service calls
- Cleaning and maintenance free
- Replaces mechanical coin acceptors

Dollar Coin Version Available

Part Number		Price per ea.	L/20
42-3036-00	Imonex $.05 USA Coin Mech	22.40	20.35
42-1184-00	Imonex $.25 USA Coin Mech	25.15	20.15
42-6901-00	Imonex $.25, .882" & .900" Token Mech	22.40	20.35
42-3135-00	Imonex $.25 & .900" Token Mech	32.60	28.55
42-2034-00	Imonex $.25 & .984" QST Token Coin Mech	22.40	20.35
42-8108-00	Imonex $1.00 USA Coin Mech (Golden Dollar & SBA Dollar Coin)	21.30	18.25
42-3186-00	Imonex .800" Token Coin Mech	32.60	28.55
42-1184-01	Imonex .882" Token Coin Mech	22.40	20.35
42-1184-02	Imonex .900" Token Coin Mech	22.40	20.35
42-8158-00	Imonex .882" & .900" Token Coin Mech	22.40	20.35
42-1184-03	Imonex .984" Token Coin Mech	22.40	20.35
42-7012-00	Imonex .984" & 1" Token Coin Mech	22.40	20.35
42-3087-00	Imonex 1" Token Coin Mech	32.60	28.55
120-900-11	Imonex 1.125" Token CoinMech	32.60	28.55

IMONEX® 3-COIN MECH

- Latest technology reduces coin jam related service calls
- Reliable – no moving parts
- Reduces machine down time and service calls
- Cleaning and maintenance free
- Accepts $.05, $.10 & $.25 U.S. Coins

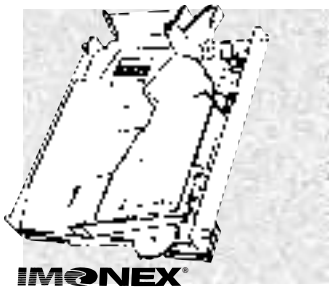

Part Number		Price per ea.
42-3035-00	Imonex 3-Coin Acceptor Contin-U-Op Model 300 For use on Coinco 4-price changers	45.85
42-3034-00	Imonex 3-Coin Acceptor Contin-U-Op Model 410 For use on National cigarette machines, models 222, 800 and manual candy/pastry machines with in-line coin outlet	61.75
42-3033-00	Imonex 3-Coin Acceptor Contin-U-Op Model 630 For use on most Coinco S75 changers with in-line coin outlet with nickel flipper	44.95
42-1387-00	Imonex 3-Coin Acceptor Contin-U-Op Model 760 For use on AMI-Rowe Jukeboxes	61.75
42-1386-00	Imonex 3-Coin Acceptor Contin-U-Op Model 780 For use on most National ACER changers with in-line coin outlet	44.95
42-1388-00	Imonex 3-Coin Acceptor Contin-U-Op Model 960 For use on most Vendo Vari-Price and NRI coin changers with in-line coin outlet without nickel flipper	44.95
426-82	ACMR Conversion Ref. No. 426-82	15.65
122-88	Enlarged Escrow Ref. No. 122-88	18.05
27-1054-00	ACMR Kit Ref. No. 526-91	24.10
27-1087-00	System Kit for National Ref. No. 302-88	48.15
42-1387-01	760 Coin Mech Quarter Only Ref. No. 965-41	50.95
42-3185-00	Contin-U-Op Model 520 Kit Ref. No. 944-33	36.10
42-8049-00	Cointron Changer, Ref. No. 960T	27.75

IMONEX R SERIES 2-COIN ROLL-DOWN ACCEPTOR

- Accepts both the Golden Dollar $1.00 and $.25 via two independent coin switches and exit paths
- Can be used in Merit Megatouch machines which use roll-down acceptors
- Patented coin processor uses no troublesome rockers/cradles which reduces coin jams dramatically
- Maintenance FREE
- Requires Optional Credit Multiplier Board (42-8110-00) to be installed on $1.00 coin switch to multiply pulses for machines that rely on single $0.25 coin switch closures.

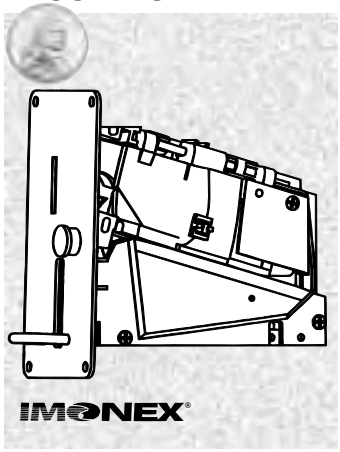

Part Number		Price per ea.
42-8132-00	Imonex R Series 2-Coin Roll-Down Acceptor	53.30

IMONEX GOLDEN DOLLAR & QUARTER CONVERSION KIT FOR NATIONAL 222 & 800

- Works on National 222 / 800 cigarette machines
- Kit includes:

  Imonex Model 410 for the $1.00 coin & U.S. Quarter with Imonex patented coin-flow

  New and improved Imonex ACMR Conversion Plates

  New and improved Imonex Enlarged Escrow
- Conversion kit allows your machine to accept both the golden dollar coin and the quarter
- Increases profit by making it easy to vend cigarettes with large coin
- People tend to part with coins more readily than bills

Part Number		Price per ea.
42-8133-00	Imonex Golden Dollar & Quarter Conversion Kit for National 222 & 800	172.10

© HAPP CONTROLS

NRI ELECTRONIC COIN VALIDATOR SYSTEM G-13.MFT

- 32 different coins/tokens may be accepted
- Very fast coin/token acceptance; 6 coins per second (Casino model G-13.mft06V)
- Teach mode for 6 tokens
- CMOS micro processor and SMT provides outstanding reliability and improved coin/token measuring system.
- 24 measurement parameters are used; coins/tokens are measured primarily by diameter, thickness, alloy content and even embossing features. Optimised for bi-metal, tri-metal coins.
- Anti-stringing provisions are electronic via a directional accept sensor and a mechanical one way gate
- Re-programmable by means of simple teaching by inserting new coin set with the aid of programming station (PC and/or Palm)
- 90 day warranty from Happ Controls
- Operating voltage 10V to 16V DC
- Current ~55mA standby + ~3W (acceptance gate)
- Size World standard 3.5 x 4 fits all Happ Controls coin doors and front plates

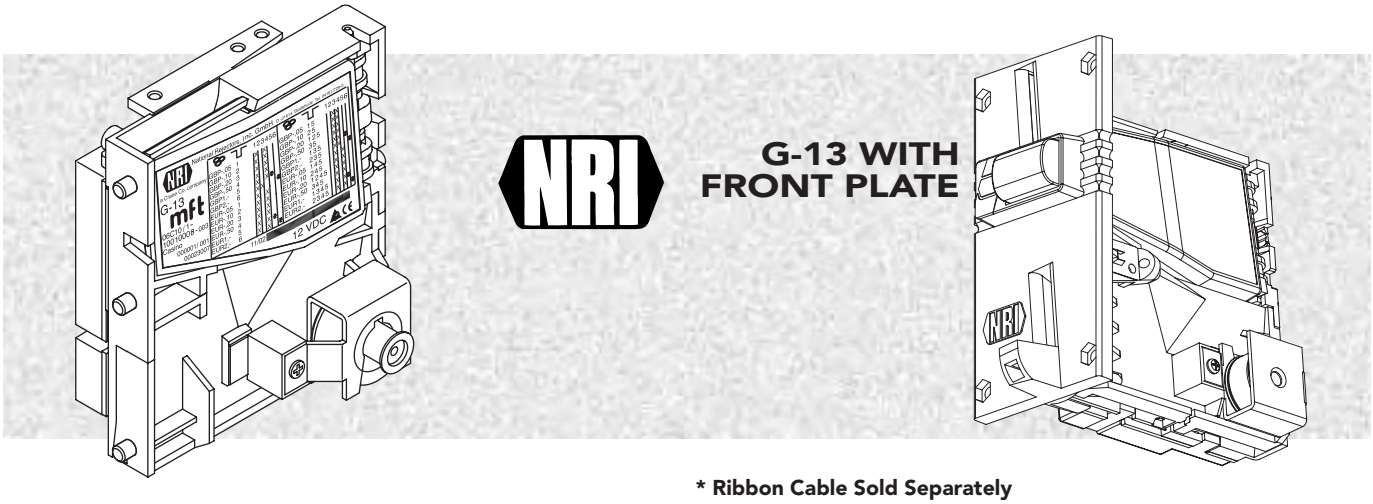

*** Ribbon Cable Sold Separately**

MOUNTING DIMENSIONS

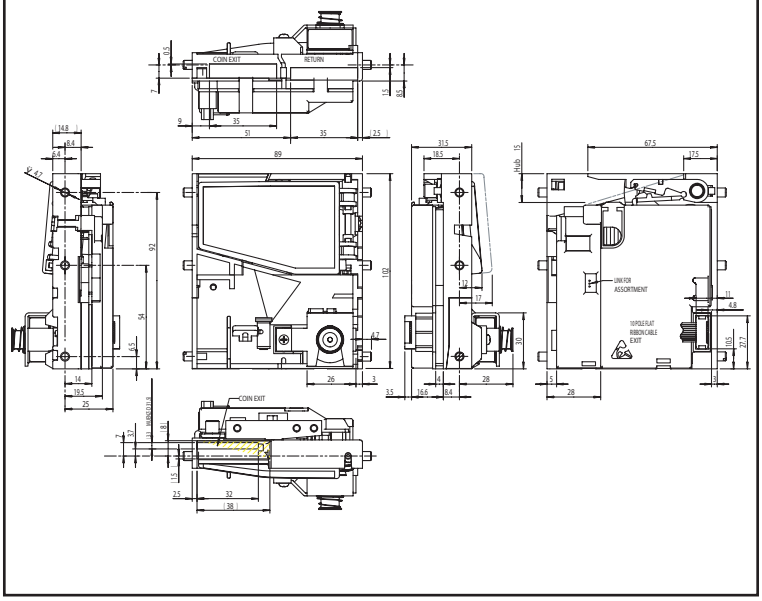

MOUNTING DIMENSIONS

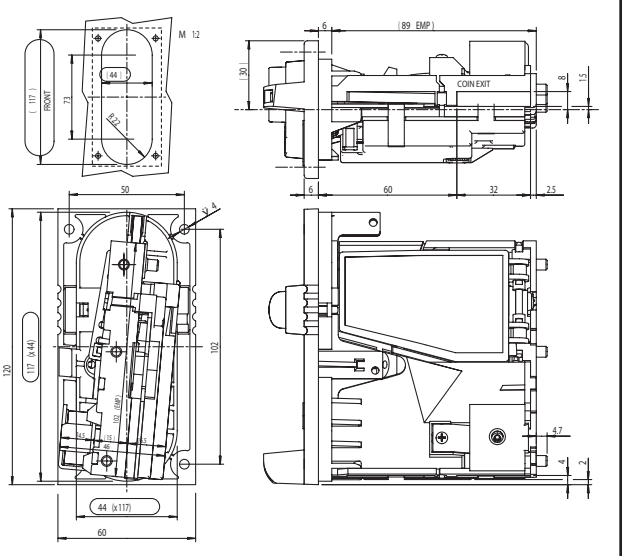

Part Number		Price per ea.	L/6
Call for Part #	NRI G-13 Electronic Coin Validator* (Specify coins to accept)	150.60	147.50
42-0869-00	Ribbon Cable	9.45	8.50

Part Number		Price per ea.	L/6
Call for Part #	NRI G-13 Front Plate Electronic Coin Validator*	174.70	171.55

NRI STEALTH ELECTRONIC COIN VALIDATOR SYSTEM

- The ideal coin validation system for both street and arcade operations
- Fast and accurate coin/token validation without the use of mechanical cradles to virtually eliminate coin jams and coin related service calls
- Four channel coin acceptance (2 factory programmed, 2 field teachable for tokens)
- Factory programmed to accept US $0.25 and $1.00 coins and provide pulses (closures to ground) of one pulse for $0.25 and four pulses for $1.00 coins to single output channel
- Field programmable Token acceptance can be learned in via utilization of Teach Mode. Each token will provide one pulse out a single output line
- Two different field programmable coins/tokens can be taught into the coin validator in addition to the US $0.25 and $1.00 coin
- Coins/tokens are measured by diameter, thickness, alloy content and even embossing features
- Microprocessor and SMT provide outstanding reliability in coin/token validation
- All output channels tied to one output line
- 90 day warranty from Happ Controls
- Operating voltage – 10v to 16v DC, Current – 20ma standby – 200ma operating (200ms)
- Size – World standard 3.5" x 4" fits all Happ Controls coin doors and front plates

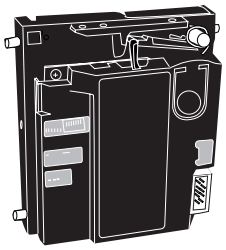

Figure 1

How to teach the Stealth Mech. to accept tokens.

1. The Stealth Mech. Must remain connected to the machine to obtain power.
2. Along the back of the mech. you will find a bank of 6 dip switches. (See figure 1)
3. Turn the "Teach Enable" switch #6 to be in "ON" position.(See figure 2)
4. Determine which channel you wish to teach your token on (Channel #4 or Channel #5) Turn the corresponding channel switch to the "ON" position. (See figure 3)
5. Insert 10 samples of the token to be taught to that channel. After the 10th token the mech. accept coil will momentary energize to signal it has accepted the teaching of the new token.(See figure 4)
6. Turn "OFF" the "Teach Enable" switch #6.(See figure 5)
7. Turn "OFF" the channel just taught.(See figure 6)
8. Accept coil will momentary energize to signal it has completed programming of the token.(See figure 4)

Now the new token is taught and will be accepted by the mech.

SWITCH	FUNCTION
1	$.25 US
2	$1.00 US
3	Reserved
4	Learnable Token #1
5	Learnable Token #2
6	Teach Enable

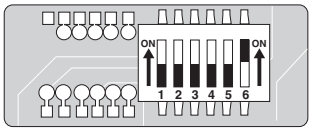

Figure 2

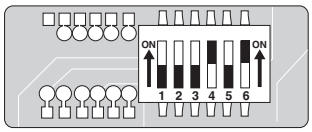

Figure 3

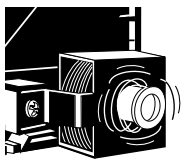

Figure 4

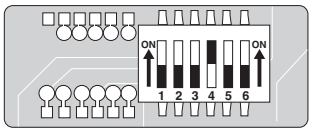

Figure 5

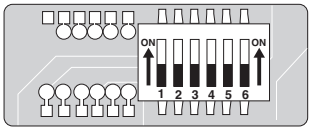

Figure 6

Part Number		Price per ea.
42-5000-00	NRI Stealth Electronic Coin Validator	87.45

ENTROPY 2000 TICKET DISPENSER

- Reduced ticket jams
- Easy to remove front plate
- Covered optic sensor
- Ticket feed button for easy ticket loading
- Direct compatibility to all major ticket dispensers on the market
- Adjustable Ticket Widths (1" or 1-5/32")
- High speed ticket dispensing 3 tickets per second
- Virtually Dust Free Ticket Validation
- Extra deep embossment of tickets for additional security
- Diagnostic LED sensors
- Fully accessible ticket path with durable stainless steel guide
- 12 Month Warranty (15 months from date of manufacture)

See page 278 for Ticket Dispenser Doors

See page 279 for Redemption Tickets

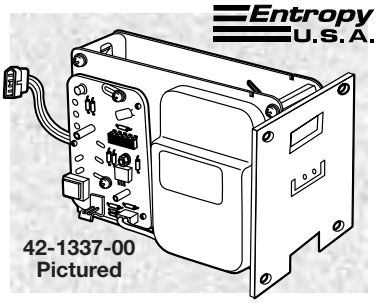

42-1337-00 Pictured

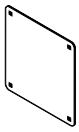

Blanking Plate (42-3394-00) Available

Part Number		Price per ea.	L/6	L/10	L/25
42-1337-00	Entropy 2000 Ticket Dispenser Continuous Type (TD963CR)	91.50	89.15	86.85	83.40
42-1337-10	Entropy 2000 Ticket Dispenser Pulse Type (TD963PR)	91.50	89.15	86.85	83.40

Replacement Parts for Entropy Ticket Dispenser		Price per ea	L/12
A070-1010-00	Replacement PCB for Entropy 2000 Continuous Type	21.75	20.50
A070-1010-10	Replacement PCB for Entropy 2000 Pulse Type	21.75	20.50
42-7208-00	Adjustment Block for Entropy 2000 Ticket Dispenser	4.95	4.50

Part Number		Price per ea
42-7269-00	Replacement PCB for Entropy 2000 Ticket Dispenser	2.75
42-8014-00	12V Motor for Entropy 2000 Ticket Dispenser	11.50
102-2045-00	Hold Blade for Entropy 2000 Ticket Dispenser	1.85
102-2034-00	Ticket Guide for Entropy 2000 Ticket Dispenser	5.15
102-2041-00	Bottom Ticket Guide	6.30
102-2044-00	Quick Release Face Plate	9.55
42-6912-00	Harness for Continuous Type	4.90
42-6916-00	Harness TD Motor Out - 12"	4.05

DELTRONIC LABS TICKET DISPENSER

- "Quick Release" face plate
- You can "snap out" one ticket dispenser and immediately replace it with another in just seconds. No tools necessary
- Easy access to front of rollers and ticket guides
- Bottom metal ticket guide
- Foolproof braking system is easily adjustable
- Optical sensor dust cover reduces maintenance
- Validation "Diamond" mark identifies tickets
- Adjustable ticket stop
- Compact and lightweight - 3"W x 4"H x 5-1/2"L, 2-1/4 lbs.

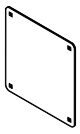

Blanking Plate (42-3394-00) Available

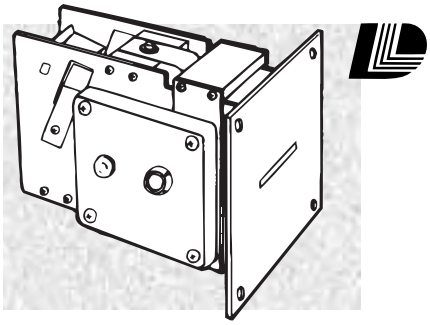

Part Number		Price per ea.	L/10
42-0544-00	Deltronic Labs DL-1275 Continuous Type Ticket Dispenser	156.70	150.60
42-0547-00	Deltronic Labs DL-4-S-S Pulse Type Ticket Dispenser	156.70	150.60

Replacement Parts

Part Number	Deltronic P/N		Price per ea.
42-0539-00	BIN-TICKET/AD	Ticket Bin (mounts to floor)	10.15
42-3266-00	BRAK/SPRAG/TD/	Brake Sprag	6.75
43-0759-00	CHIP-74C14/PC/	Chip 74C14	5.45
42-7078-00	—	DL-4-P-S	150.55
42-3184-00	COVR-H21A1/TD/	Dust Cover for Opto Sensor H21A1	2.50
42-1153-00	GUID-BOTTOM/TD/MET	Guide Bottom Metal for Ticket	7.00
42-1154-00	GUID-TOP/TD/MET	Guide Top Metal for Ticket	7.00
42-3175-00	HARN-YOGI2/YB	Harness for Yogi Board	18.90
49-2046-00	HARN-4SS	Wiring Harness for DL-4-SS	7.95
49-0798-00	HDWR-AD	Hardware Kit	4.10
42-3264-00	KIT-VALD/AD/	Validation Roller Kit (include Both Roller & Top Guide)	19.35
42-3174-00	PANL-FRONT/TD/PEM	Quick Release Face plate	14.50
DL-1275	PCBD-1275/TD	Pcb Only for DL-1275	49.20
DL4-PS	PCBD-4PS/TD	Pcb for DL4-PS	63.80
49-2044-00	PCBD-4SS	PC Ticket Board for DL-4-SS	52.50
M300-20	PCBD-M300/AD	Pcb Assy Interface for DL-1275 (M300)	150.50

Part Number	Deltronic P/N		Price per ea.
41-A-2006	RING-O	O Ring	3.50
80-A-4766	RM-MOTOR/TD/	Motor	97.85
49-A-2021	RM-RLRDRV/TD/VALD	Drive Roller	22.30
49-A-2018	RM-SFTMTR/TD/	Motor Pivot Shaft	8.45
42-3265-00	ROLR-DRIVE/VALD	Validation Drive Roller	16.45
49-A-2020	ROLR-IDLR/VALD	Validation Idler Roller	20.35
42-3263-00	SENS-H21A1/TD/	Opto Sensor H21A1	6.15
49-A-2019	SHFT-IDLRLR/TD/	Idler Roller Shaft	7.95
SPAC-PCBD	SPAC-PCBD/TD	Pcb Spacer	1.40
49-A-2012	SPRG-LOCAT/TD/	Locating Spring	2.10
49-A-2013	SPRG-TENSN/TD/	Tension Spring	2.10
43-0760-00	TRN-2N4401/TT/	Transistor Equivalent to 2N2222	1.80
43-0758-00	TRN-TIP/22TD/	Tip 122 Drive & Brake Transistor (replace D40K1 in new T/D)	3.20
42-3225-00	YOGI KIT	Yogi Kit (complete w/ Pcb DL1275 & Harness Face Plate	349.35
42-3674-00	PCBD	Yogi II Board for Deletronics Ticket Dispenser	175.85

TICKET DISPENSER DOORS

- Sturdy die cast aluminum frame; **a Happ Controls exclusive!**
- Door and dispensers conform to all industry standards
- Has .156" hole for low ticket L.E.D.
- Available with Ticket Low Switch to sense when tickets are running low
- Ticket bin holds 4000 tickets
- Ticket door includes ticket dispenser label set (42-1378-00)

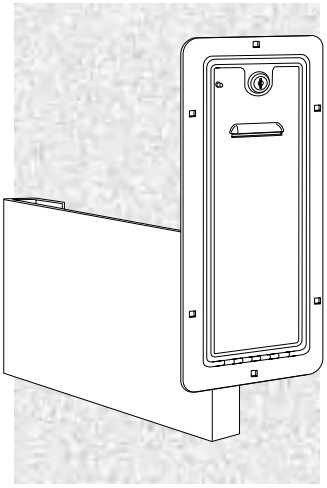

Part Number		Price per ea.	L/10
40-0540-00	Ticket Dispenser Door without Dispenser & LED	43.35	40.95
40-0541-00	Ticket Dispenser Door without Dispenser with LED	46.25	43.80
40-0543-00	Ticket Dispenser Door without Dispenser with Ticket Bin	72.35	65.80
40-0544-00	Ticket Dispenser Door with Happ (T-980) Dispenser & Ticket Bin	198.80	180.15
40-0545-00	Ticket Dispenser Door with Entropy (TD-963CR) Dispenser & Ticket Bin	167.50	160.95
40-0546-00	Ticket Dispenser Door with Deltronics (DL-1275) Dispenser & Ticket Bin	228.90	216.85

Part Number		Price per ea.	L/10
40-0547-00	Ticket Dispenser Door without Dispenser with Ticket Bin, LED, Level Sensor Switch & Harness	66.30	60.35
40-0548-00	Ticket Dispenser Door with Happ (T-980) Dispenser with Ticket Bin, LED, Level Sensor Switch & Harness	192.80	174.75
40-0549-00	Ticket Dispenser Door with Entropy (TD-963CR) Dispenser with Ticket Bin, LED, Level Sensor Switch & Harness	161.45	153.00
40-0550-00	Ticket Dispenser Door with Deltronics (DL-1275) Dispenser with Ticket Bin, LED, Level Sensor Switch & Harness	222.90	211.50

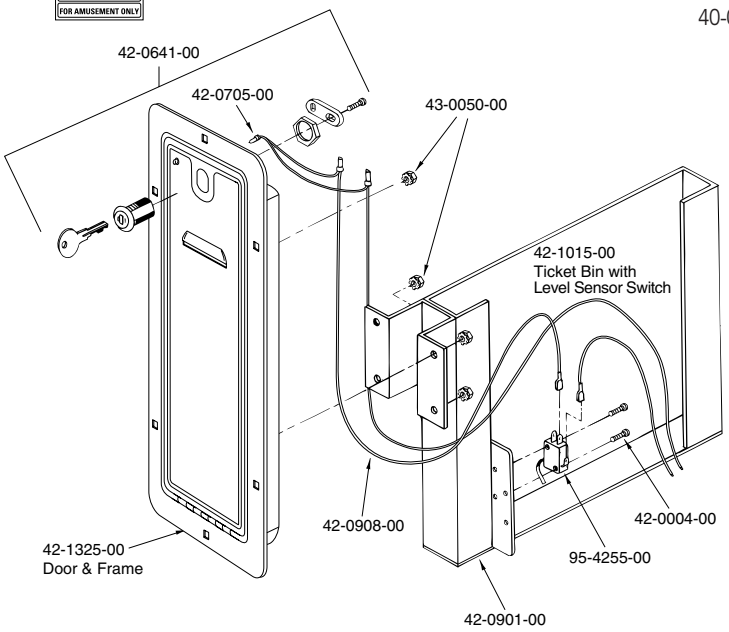

MOUNTING DIMENSIONS
ALL TICKET DISPENSER STYLE DOORS

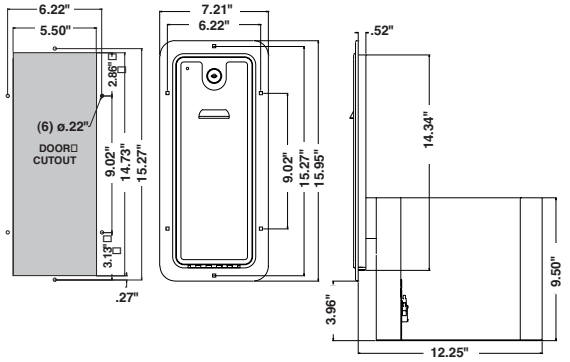

REPLACEMENT TICKET BIN FOR DELTRONICS

- Mounts to floor
- Holds 2,000 tickets
- Durable one-piece steel construction, no welds
- Holes are pre-drilled for easy mounting
- Made in USA

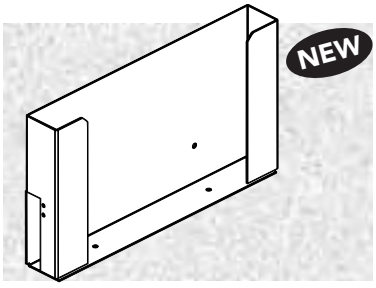

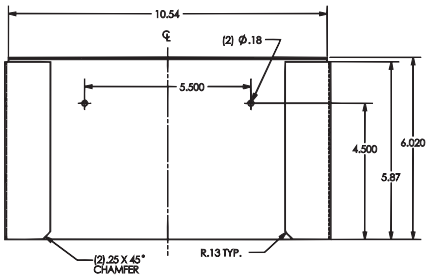

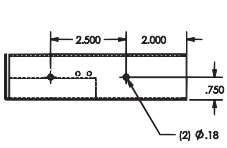

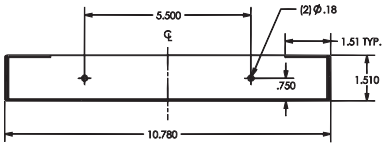

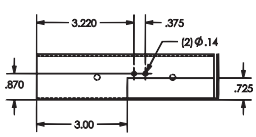

Part Number		Price per ea.	L/12
42-0539-00	Replacement Ticket Bin for Deltronics	10.15	9.15

© HAPP CONTROLS

BLANKING PLATE FOR DOOR CUTOUT

- For use with ticket dispenser and bill validator type doors
- Covers hole where door has been removed
- Black finish – blends in with equipment
- Easy installation with bolts (sold separately)
- Size: 16.05" high x 7.09" wide

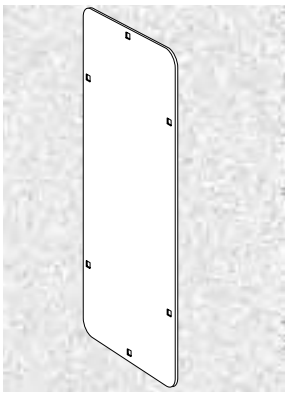

Part Number		Price per ea.
42-0663-00	Blanking Plate for Door Cutout	19.35

TICKET DISPENSER LABELS

- Great way to attract attention to ticket dispensing machines
- Simply peel off and stick on
- Black printing on bright yellow background
- Durable polystyrene material adhesive backed
- Size: 5.5" x 4"
- Complete set of 3 decals: "Tickets", "Tickets with Arrow", and "For Amusement Only"

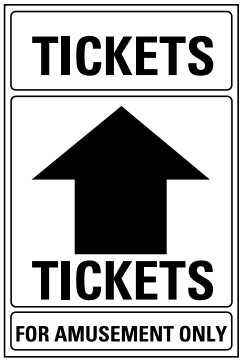

Part Number		Price per ea.	L/25
42-1378-00	Ticket Dispenser Label Set	2.10	1.90

REDEMPTION TICKETS

- Stock 1 5/32" x 2" Redemption Tickets
- Printed one side - "One Coupon"
- Consecutively single numbered
- 2,000 tickets per pack (string tied)
- Sold per pack of 2,000
- 30 packs per case
- **Custom imprinting available**

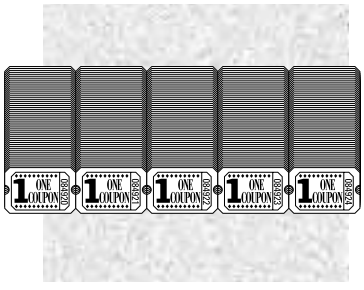

Part Number		Price per pk.	L/30
49-0906-00	Redemption Tickets, Blue	5.85	5.25
49-0906-10	Redemption Tickets, Red	6.15	5.55
49-0906-13	Redemption Tickets, Green	6.15	5.55
49-0906-15	Redemption Tickets, Yellow	6.15	5.55
49-0906-16	Redemption Tickets, Gray	6.15	5.55
49-0906-17	Redemption Tickets, Orange	6.15	5.55
49-0906-18	Redemption Tickets, Pink	6.15	5.55

TICKET DISPENSER MOUNTING PLATE

- Allows Ticket Dispenser to mount to front of game with carriage bolts
- Simply cut out square hole and install
- Made from durable Stainless Steel

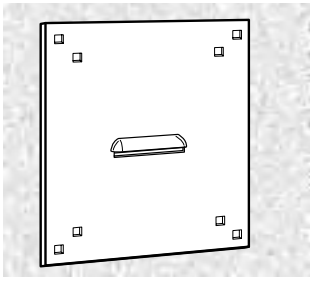

Part Number		Price per ea.	L/10
42-1268-00	Ticket Dispenser Mounting Plate	12.10	10.95

BLANKING PLATE FOR TICKET DISPENSERS

- Now you can remove your ticket dispenser and cover the hole with an OEM blanking plate
- Black painted metal blends in with equipment
- Size: 5.32" x 5.07" x .20"
- Easy installation with bolts (sold separately)
- Made in USA

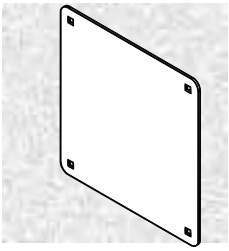

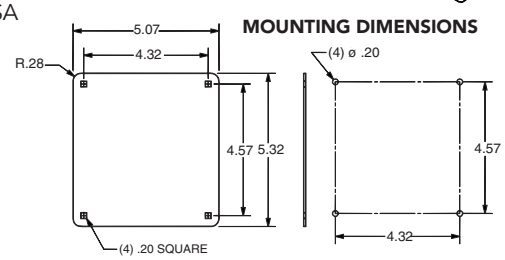

Part Number		Price per ea.
42-3394-00	Blanking Plate for Ticket Dispensers	8.55

SLIM TICKET DOOR

- Compact design to fit in small mounting area
- Comes with ticket bin to hold 4,000 tickets
- Overall dimensions: 5.75" wide x 22.25" high
- Cutout dimensions: 4.375" wide x 21" high
- Ticket door includes ticket dispenser label set (42-1378-00)

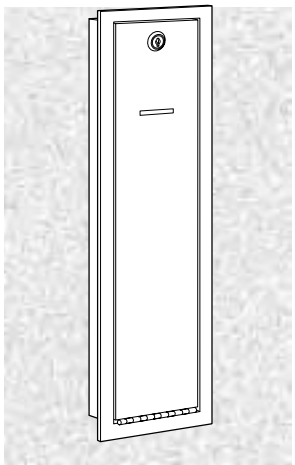

Part Number		Price per ea.	L/6
40-0390-00	Slim Ticket Door	78.40	69.90

REPLACEMENT PARTS FOR OLDER TYPE WELLS-GARDNER/COIN CONTROLS OVER/UNDER DUAL ENTRY COIN DOOR

HAPP CONTROLS

WELLS-GARDNER ELECTRONICS CORPORATION

Item	Part Number	Description
1)	812-4050-XX	S-10 Acceptor
	812-4150-011	S-7 U.S. 25¢
2)	820-4177-00	Plastic Cashbox
3)	820-4189-00	Steel Enclosure
4)	890-1002-00	Hinge Screw
5)	890-1003-00	Clamp Screw
6)	890-1017-00	Screw Bezel Nylon
7)	890-1206-02	#4-40 Kep Nut
8)	890-1300-00	Keyhook
9)	891-0508-16	Frame
10)	891-0506-00	Clamp
11)	891-0547-00	Double D Cam Lock
12)	891-0603-16	Black Mini Door
13)	891-0604-16	2 Entry Upper Door
14)	891-1008-039	Lockout Bracket
15)	891-1008-107	Baseplate Assembly
16)	891-1109-16	Black Reject Flap Nylon
17)	891-1113-01	Entry/Reject Button 25¢
18)	891-1117-00	Lampholder
19)	891-1121-00	Entry/Reject Button Spring
20)	891-1118-00	6V Lamp Wedge Base
21)	891-1311-16	Black Button Bezel
22)	891-1312-16	Black Reject Bezel
23)	891-2125-00	12V Lockout Coil Assembly
24)	891-2216-16	Microswitch Assembly
24A)	890-1007-00	Microswitch Screw
24B)	890-1206-02	#4-40 Kep Nut
24C)	891-1105-01	Reject Cup Side Plate
24D)	891-1106-00	Reject Cup Base Plate
24E)	891-1107-00	Microswitch Bracket
24F)	891-1110-00	Coin Adjuster
24G)	891-1116-16	Black Microswitch
	891-1116-11	White Microswitch
	891-1116-10	Red Microswitch
24H)	891-1125-00	Microswitch Plastic Cover
24J)	892-1002-07	Snap On Clip
24K)	892-1002-08	Elastic Lock Nut
24L)	892-1002-09	Snap On Sleeve
24M)	890-1007-00	Microswitch Screw
25)	892-1002-01	Coin Inlet Lamp Side
26)	892-1002-021	Coin Inlet Cover Side
27)	892-1002-10	Hold Down Bracket
28)	823-1011-00	12V DC Meter
	823-1103-00	4.5V DC Meter
29)	890-1032-01	Meter & Lockout Screw
30)	822-1400-00	Locking Bar
31)	890-1019-00	3/4" Lockwasher

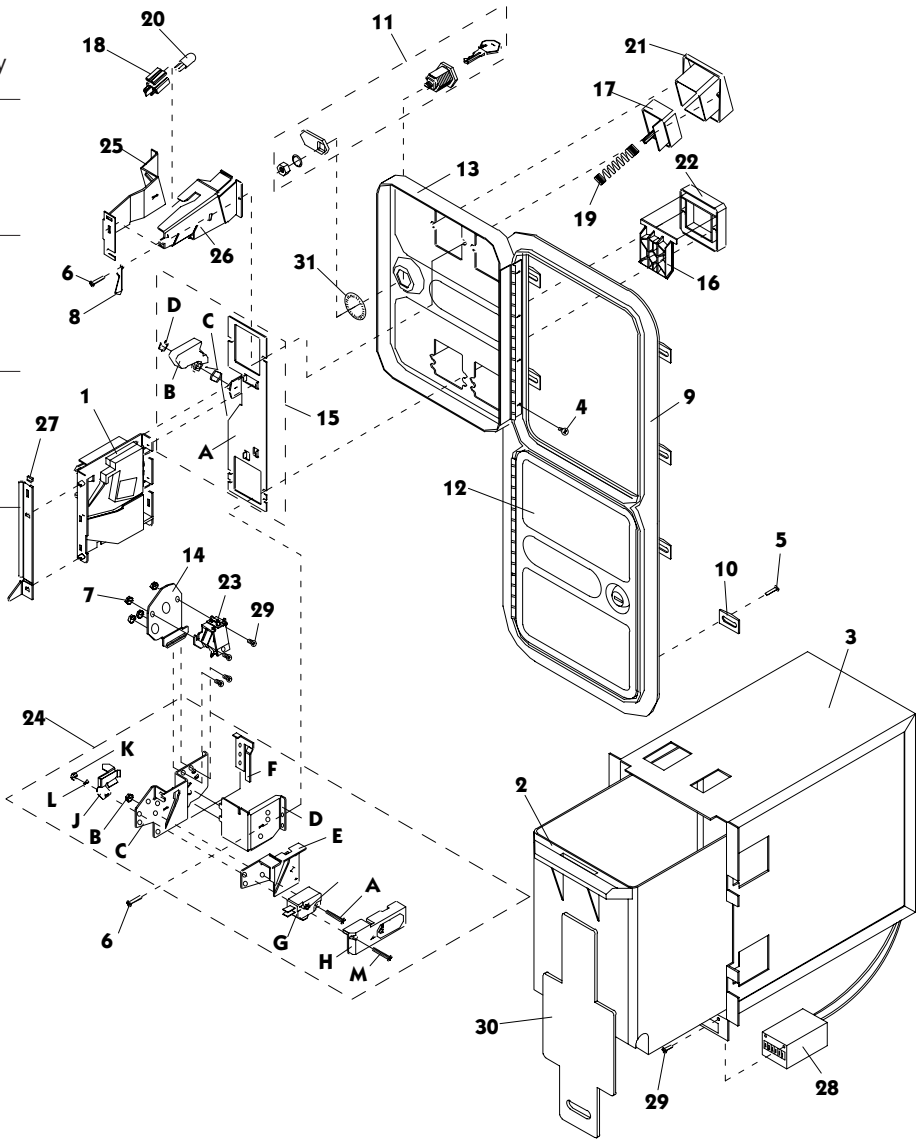

© HAPP CONTROLS

REPLACEMENT PARTS FOR OLDER TYPE WELLS-GARDNER/COIN CONTROLS OVER/UNDER DOOR FOR BILL VALIDATORS

HAPP CONTROLS

WELLS-GARDNER
ELECTRONICS CORPORATION

Item	Part Number	Description
1)	812-4050-XX	S-10 Acceptor
	812-4150-011	S-7 U.S. 25¢ Acceptor
2)	820-4177-00	Plastic Cash Box
3)	820-4189-00	Stacker Enclosure for Mars™ 2411
4)	890-1051-00	Plastic Spacer
5)	890-1002-00	Hinge Screw
6)	890-1003-00	Clamp Screw
7)	890-1017-00	Bezel Nylon Screw
8)	890-1019-00	3/4'' Lock Washer
9)	890-1209-00	#8-32 Kepnut
10)	890-1300-00	Keyhook
11)	891-0100-4016	Cover Plate
12)	891-0506-00	Clamp
13)	891-0509-16	Stacker Ready Frame
14)	891-0547-00	Double D Cam Lock
15)	891-0603-16	Blank Mini Door
16)	891-0609-16	Stacker Ready Door
17)	891-1008-108	Base Plate Assembly
18)	891-1109-16	Black Reject Flap
19)	891-1113-01	Entry/Reject Button 25¢
20)	891-1117-00	Lampholder
21)	891-1118-00	6V Lampwedge
	891-1219-00	14V Lampwedge
	891-1318-00	28V Lampwedge
22)	891-1121-00	Entry/Reject Button Spring
23)	891-1311-16	Black Button Bezel
24)	891-1312-16	Black Reject Bezel
25)	891-2216-03	Microswitch Assembly
26)	891-3015-01	Bridge Pin
27)	892-1002-01	Lampside Bracket
28)	892-1002-021	Coverside Bracket
29)	892-1002-04	Hold Down Bracket
30)	822-1400-00	Locking Bar (Optional)
31)	890-1032-01	Meter & Lockout Screw (Optional)
32)	823-1011-00	12 VDC Meter (Optional)
	823-1103-00	4.5 VDC Meter (Optional)
33)	890-1206-02	#4-40 Kepnut
34)	890-2125-11	Lockout Coil (Optional)

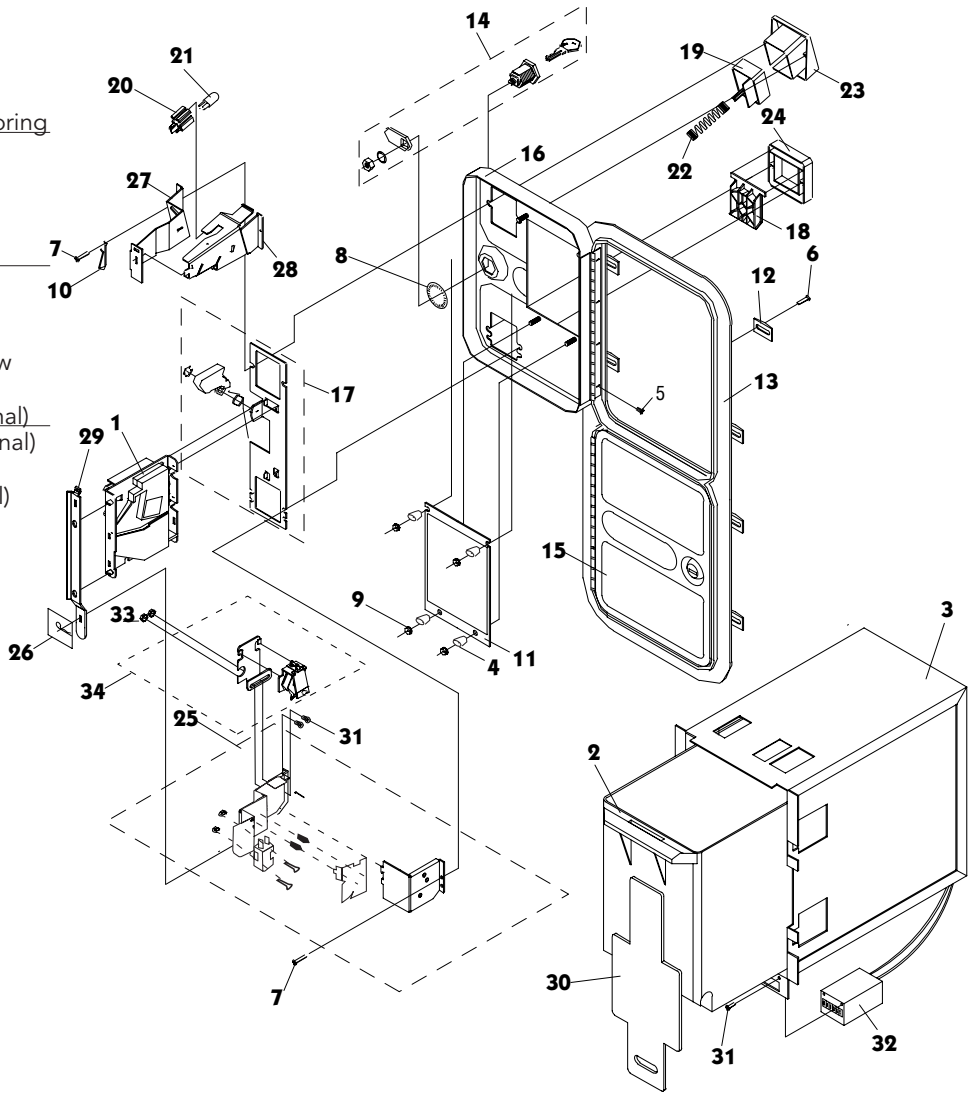

REPLACEMENT PARTS FOR OLDER TYPE WELLS-GARDNER/COIN CONTROLS STANDARD DOOR II: WIDE-BODIED/PINBALL DOOR

HAPP CONTROLS

WELLS-GARDNER
ELECTRONICS CORPORATION

Item	Part Number	Description
1)	890-1002-00	Screw Hinge
2)	890-1017-00	Screw, Trilobular
3)	890-1209-00	Kep Nut, #8-32
4)	890-1300-00	Keyhook
5)	891-0100-7116	Lower Cover Plate
6)	891-0546-00	Lock, Double Bit
	891-0547-00	Double D Cam Lock
7)	891-1008-107	Base Plate Assembly
8)	891-1109-16	Reject Flap Black
9)	891-1113-01	Entry/Reject Button $.25
10)	891-1117-00	Lampholder
11)	891-1118-00	Lamp Wedge Base 6V
	891-1219-00	14V Lamp Wedge
	891-1318-00	28V Lamp Wedge
12)	891-1121-00	Spring, E/R Button
13)	891-1311-16	Button Black Bezel
14)	891-1312-16	Black Reject Bezel
15)	891-1701-16	Frame, Std Door II Black
16)	891-1730-168	Std Door II, 2 Entry W/DBV
17)	891-2216-16	Microswitch Assembly
17A)	890-1007-00	Screw Flat Head M/S
17B)	890-1206-02	Kep Nut # 4-40
17C)	891-1105-01	Reject Cup Side Plate
17D)	891-1106-00	Reject Cup Base Plate
17E)	891-1107-00	Microswitch Bracket
17F)	891-1110-00	Coin Adjuster
17G)	891-1116-16	Black Microswitch
17H)	891-1125-00	Plastic Cover Plastic
17J)	892-1002-07	Snap-On Clip
17K)	892-1002-08	Elastic Lock Nut
17L)	892-1002-09	Snap-On Sleeve
17M)	892-1002-11	Pan Head Screw
18)	892-1002-01	Lampside Bracket
19)	892-1002-021	Coverside Bracket
20)	892-1002-10	Hold Down Bracket
21)	891-0100-6016	Upper Cover Plate
22)	812-4150-011	S-7 Coin Acceptor
	812-4050-XX	S-10 Coin Acceptor (Optional)
23)	890-1051-00	Plastic Spacer
24)	890-1019-00	3/4" Lock Washer

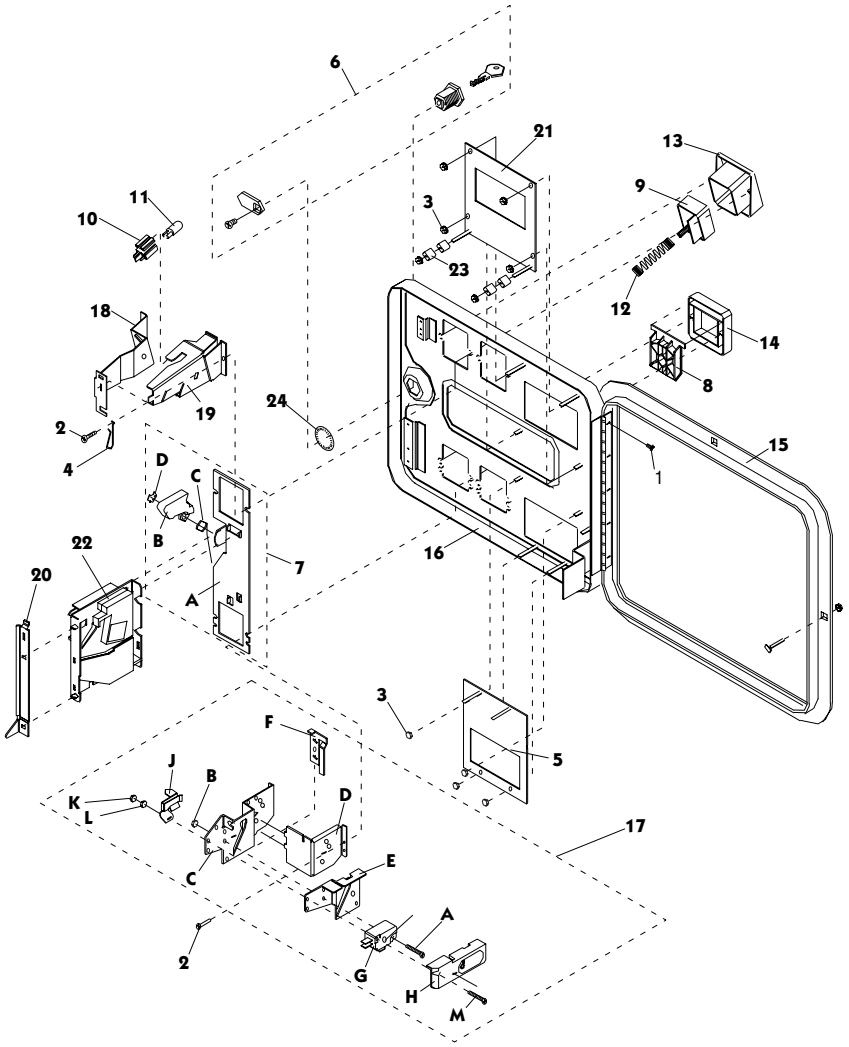

© HAPP CONTROLS

REPLACEMENT PARTS FOR OLDER TYPE WELLS-GARDNER/COIN CONTROLS FRONT PLATE ASSEMBLY

HAPP CONTROLS

WELLS-GARDNER
ELECTRONICS CORPORATION

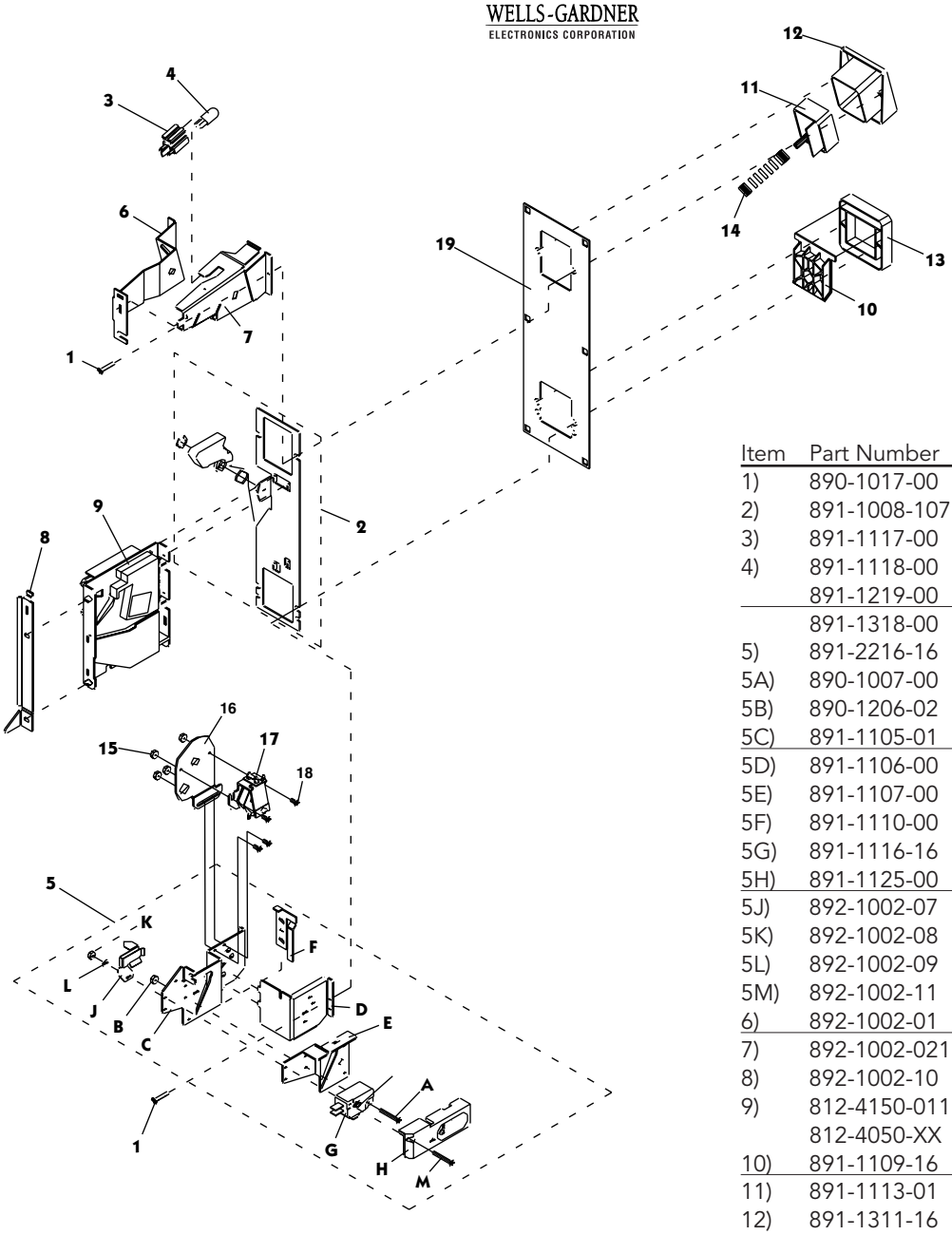

Item	Part Number	Description
1)	890-1017-00	Screw, Trilobular
2)	891-1008-107	Base Plate Assembly
3)	891-1117-00	Lampholder
4)	891-1118-00	Lamp Wedge Base 6 Volt
	891-1219-00	14v Lampwedge
	891-1318-00	28v Lampwedge
5)	891-2216-16	Microswitch Assembly
5A)	890-1007-00	Screw, Flat Head M/S
5B)	890-1206-02	Kep Nut # 4-40
5C)	891-1105-01	Reject Cup Side Plate
5D)	891-1106-00	Reject Cup Base Plate
5E)	891-1107-00	Bracket, Microswitch
5F)	891-1110-00	Adjuster, Coin
5G)	891-1116-16	Microswitch, Black-Med.
5H)	891-1125-00	Cover, Plastic
5J)	892-1002-07	Clip, Snap-On
5K)	892-1002-08	Elastic Lock Nut
5L)	892-1002-09	Sleeve, Snap-On
5M)	892-1002-11	Screw, Pan Head
6)	892-1002-01	Bracket, Lampside
7)	892-1002-021	Bracket, Coverside
8)	892-1002-10	Bracket, Hold Down
9)	812-4150-011	S-7 Coin Acceptor
	812-4050-XX	S-10 Acceptor (Optional)
10)	891-1109-16	Reject Flap Black
11)	891-1113-01	Entry/Reject Button 25c
12)	891-1311-16	Button Bezel, Black
13)	891-1312-16	Reject Bezel, Black
14)	891-1121-00	Spring, E/R Button
15)	890-1206-02	#4-40 Kep Nut
16)	890-1008-041	Lockout Bracket
17)	891-2125-00	12v Lockout Coil Assy
18)	890-1032-01	Meter & Lockout Screw
19)	891-1101-16	Front Plate Black

ACTIVE STEERING WHEEL ASSEMBLY

- 270° wheel assembly fitted with a strong DC motor to provide realistic feel and feedback
- Requires signals from game board to operate
- Black cap with checkered flag logo fitted as standard
- Not intended to connect to a PC
- Optional Control Board available (50-2000-02)
- This product is manufactured under a technology license agreement with **ATARI GAMES CORPORATION®**

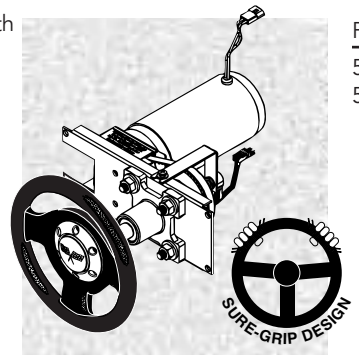

Part Number		Price per ea.	L/6
50-0102-08	270° Active Steering Wheel Assembly	361.35	348.15
50-2000-02	Motor Controller for Active Steering Wheel	41.85	39.95

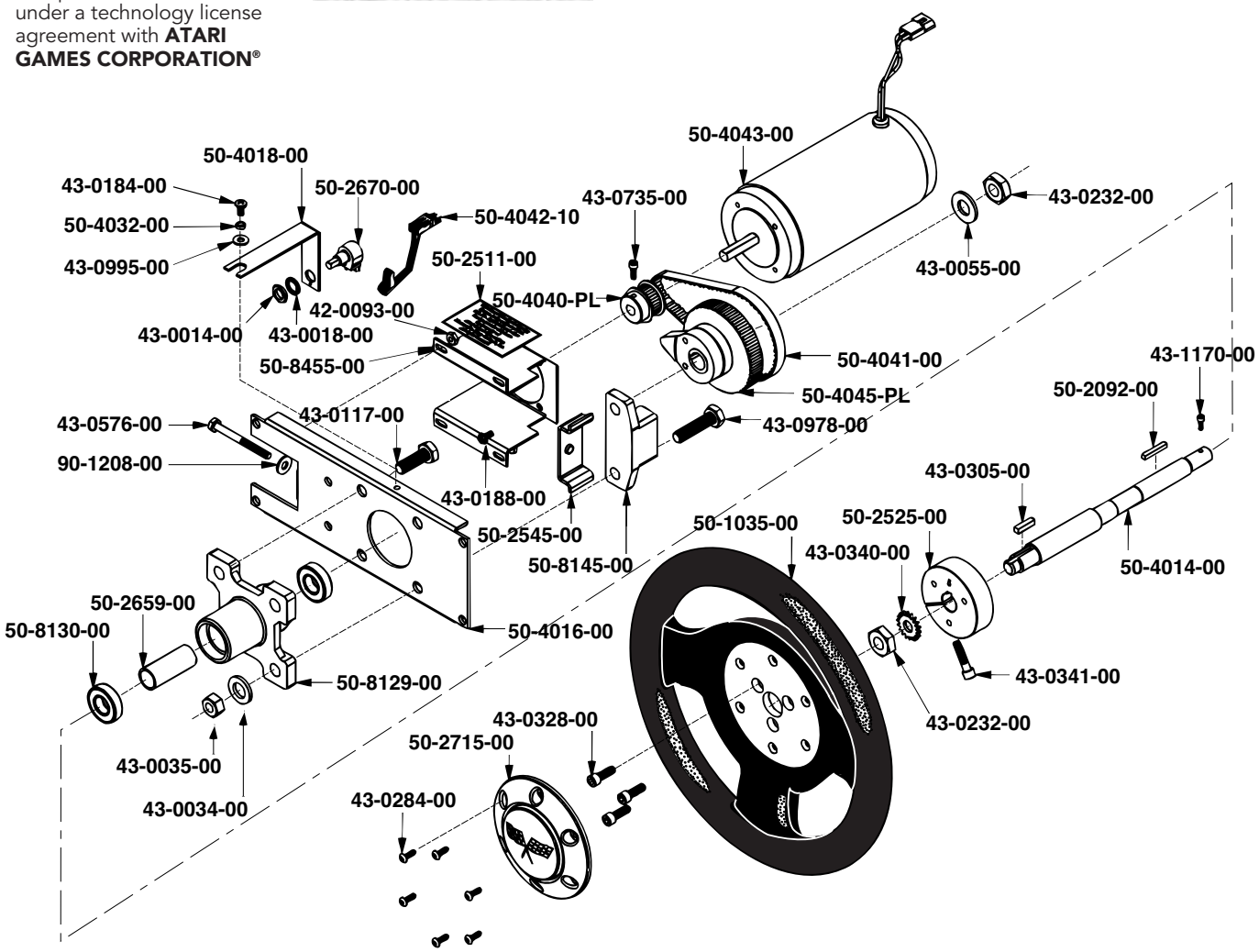

MOUNTING DIMENSIONS

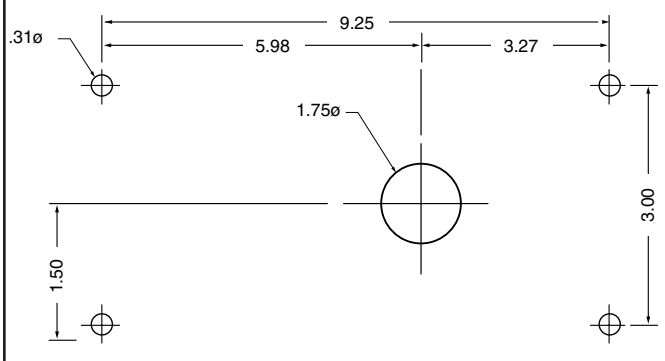

OVERALL DIMENSIONS

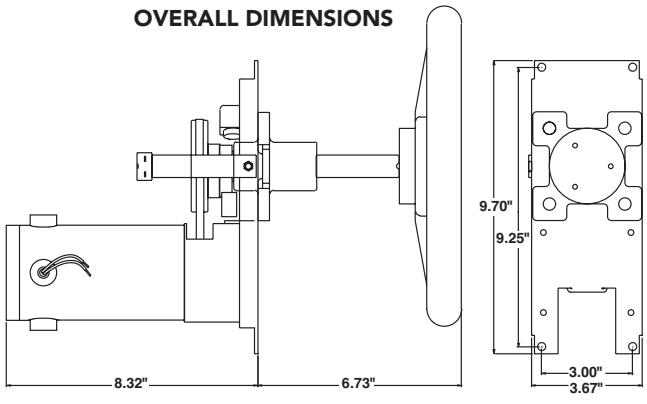

© HAPP CONTROLS

270° STEERING WHEEL

- New innovative "Sure-Grip" design gives better control and feel
- Molded durable black rubber hoop with checkered flag cap
- Ball bearing construction
- Potentiometer control or encoder PCB
- Standard mounting
- Heavy-duty construction
- Black cap with checkered flag logo fitted as standard

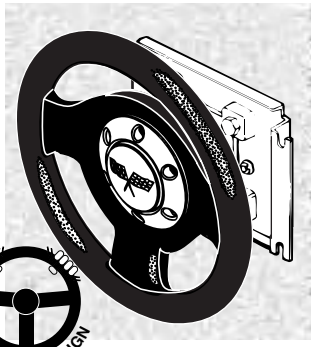

Part Number		Price per ea.	L/6
50-2838-00	270° Steering Wheel with Pot	245.85	229.45
50-2836-00	270° Steering Wheel with Optical PCB	208.65	191.20

FOR 50-2838-00
270° Steering Wheel with Potentiometer

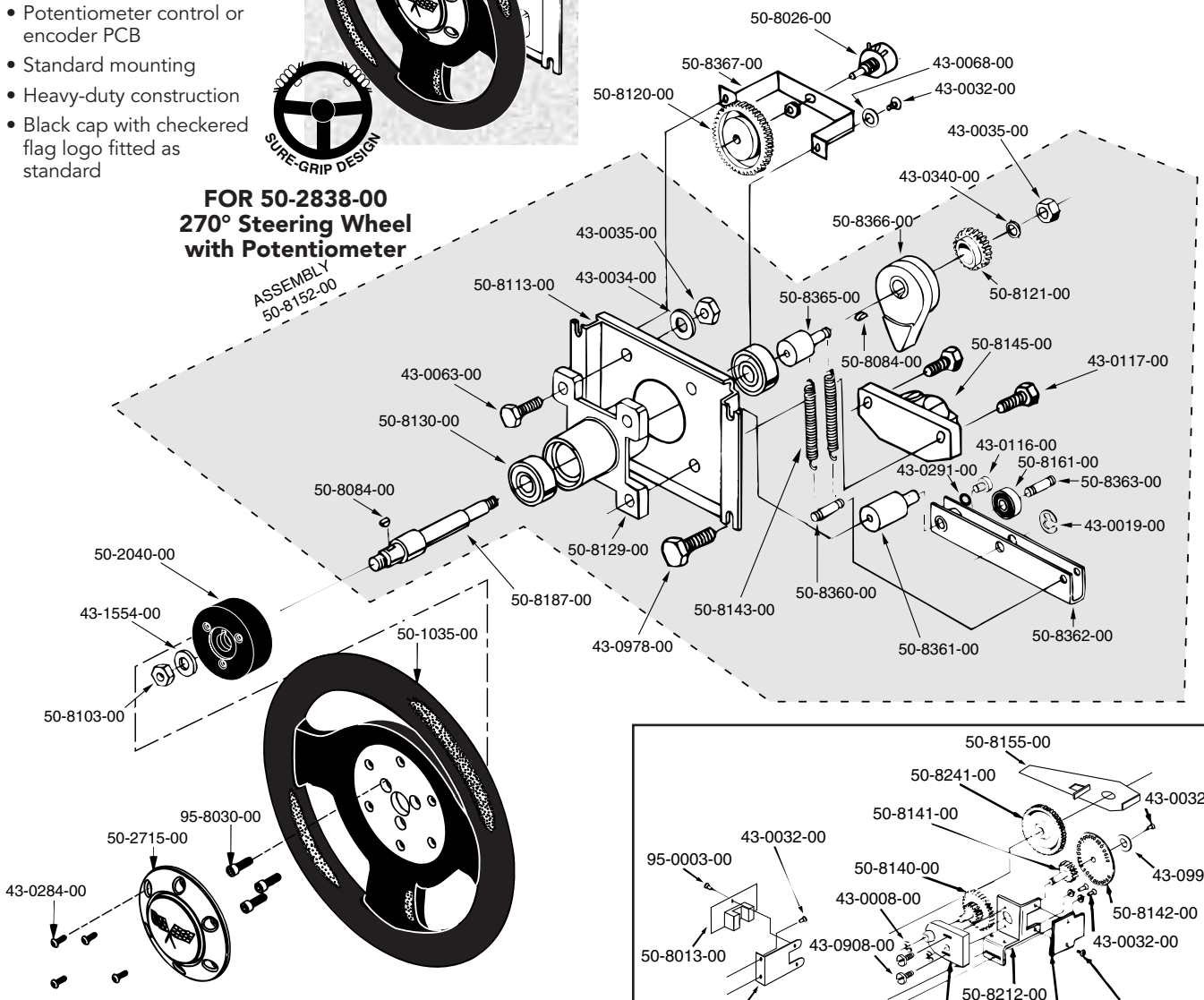

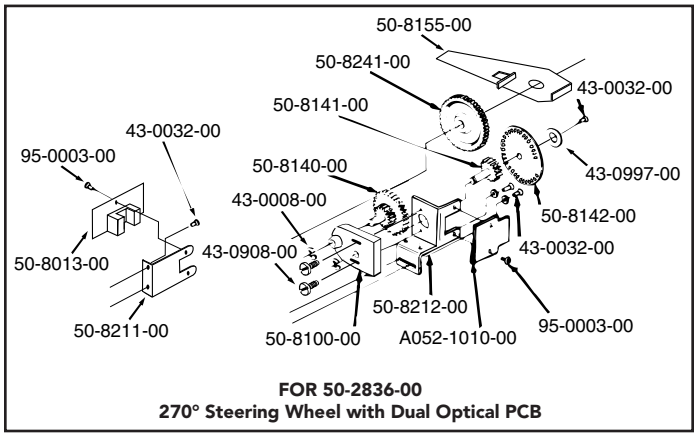

FOR 50-2836-00
270° Steering Wheel with Dual Optical PCB

270° WHEEL MOUNTING DIMENSIONS

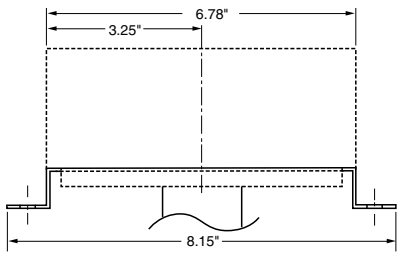

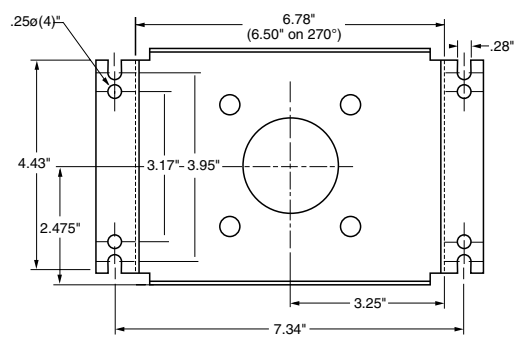

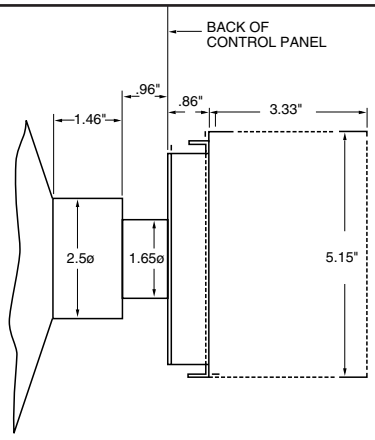

STEERING WHEEL ASSEMBLY– 360° WHEEL

- New innovative "Sure-Grip" design gives better control and feel
- Molded durable black rubber hoop with checkered flag cap
- Ball bearing construction
- Optical control
- Standard mounting
- Heavy duty construction
- Black cap with checkered flag logo fitted as standard

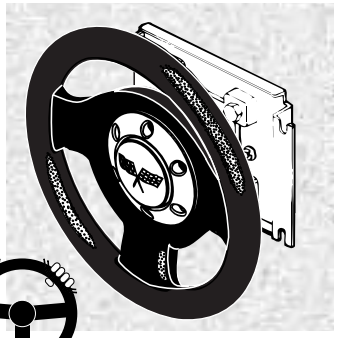

Part Number		Price per ea.	L/6
50-2837-00	360° Steering Wheel	240.40	217.45

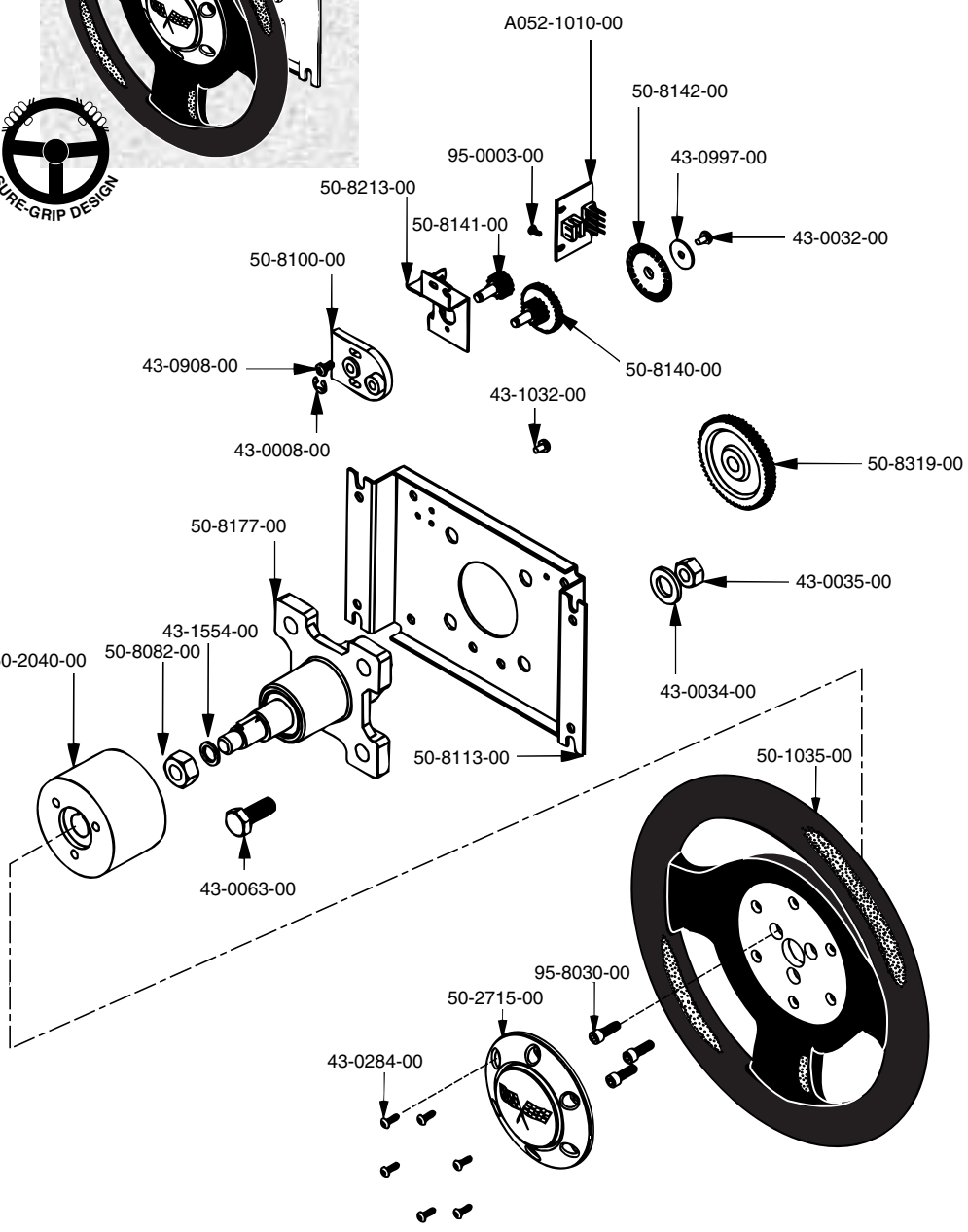

360° WHEEL MOUNTING DIMENSIONS

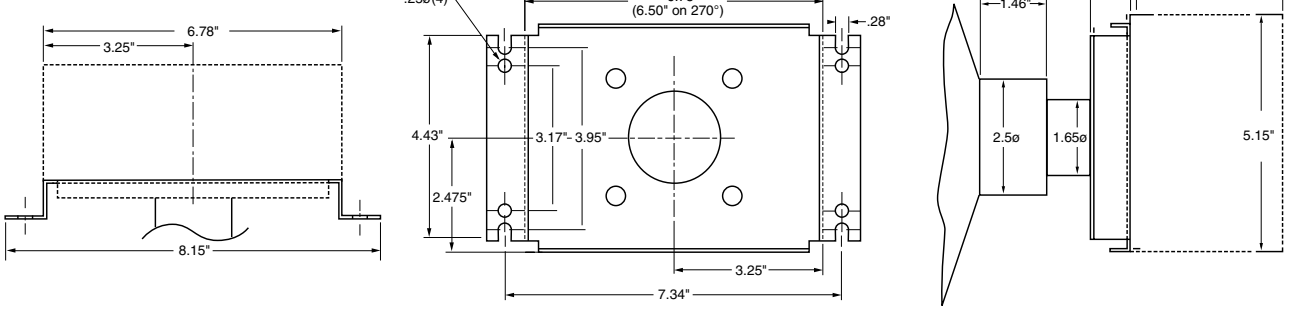

© HAPP CONTROLS

360°/270° MODULAR STYLE STEERING WHEEL ASSEMBLY

- New innovative "Sure-Grip" design gives better control and feel
- Molded durable black rubber hoop with checkered flag cap
- Self-contained for surface mount to most any game cabinet
- Allows standard upright video games to be converted to driving type games
- Includes harness
- Will fit any non-active steering type assemblies (270°/360°)

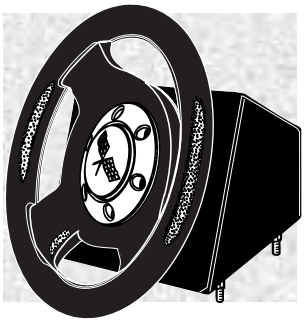

SURE-GRIP DESIGN

270° VERSION PICTURED

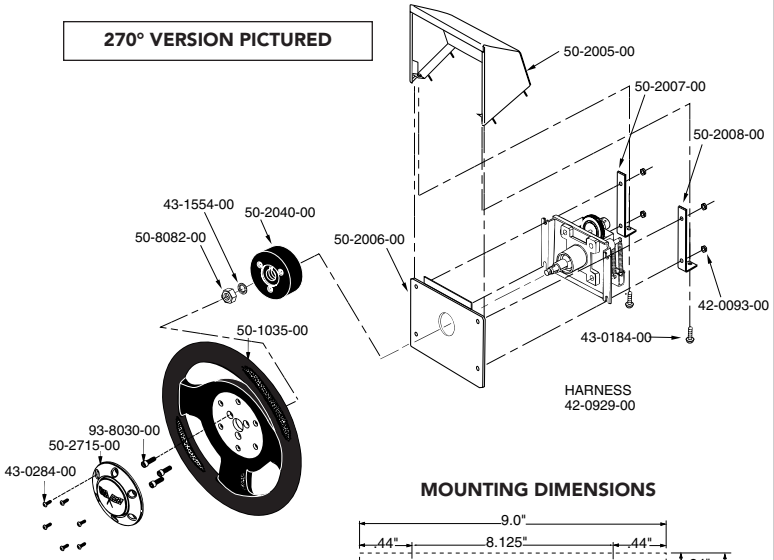

MOUNTING DIMENSIONS

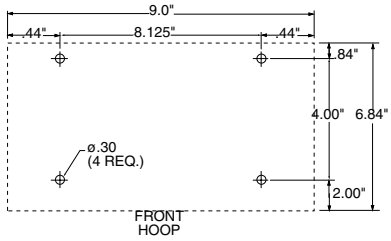

Part Number		Price per ea.	L/6
50-2839-00	270° Modular Steering Wheel	322.30	284.10
50-2840-00	360° Modular Steering Wheel	229.45	213.05

FLIGHT YOKE

- Designed to simulate aircraft yoke
- Rugged construction
- Each grip contains trigger and thumbswitch
- Potentiometers, 100k fitted as standard, sense both the rotation (roll) and axial stroke (pitch)

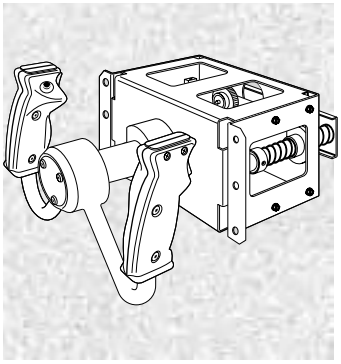

MOUNTING DIMENSIONS

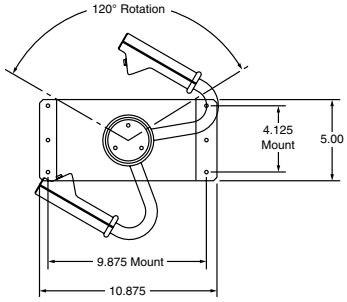

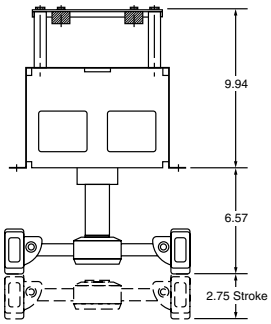

Part Number		Price per ea.
50-0204-00	Flight Yoke	995.00

DURABLE REPLACEMENT CONTROLS FOR DRIVING GAMES

Description	Part Number	Price per ea.
For Chase H.Q.		
360° Steering Wheel Kit (Optical)	50-8074-00	168.70
270° Steering Wheel Kit (Optical)	50-8033-00	234.95
Turbo shifter Kit	50-8051-00	60.35
Super Chase 270° Steering Wheel 5K Potentiometer 1:1	50-8101-00	210.80
For Sega Turbo Outrun Conversions		
Turbo Shifter Kit	50-8091-00	60.35
For Sega Super Monaco GP		
270° Steering Wheel Kit (Potentiometer)	50-8188-00	216.85
Up/Down Shifter	50-8110-00	48.25

Note: 270° wheel plus up/down shifter replaces original shifter/wheel assembly

Visit Our Web Site:
happcontrols.com
for *NEW* Product Updates!!

REPLACEMENT STEERING WHEEL ASSEMBLIES

SURE-GRIP DESIGN

- New innovative "Sure-Grip" design allows better control and feel
- Molded durable black rubber
- 11.4" diameter
- Includes black plastic checkered flag cap and screws

Part Number		Price per ea.	L/12
50-2844-00	Sure-Grip Design	42.20	36.15

USA DESIGN

- Simulated leather look
- Molded durable hard black plastic
- 11.2" diameter
- Includes black plastic checkered flag cap and screws

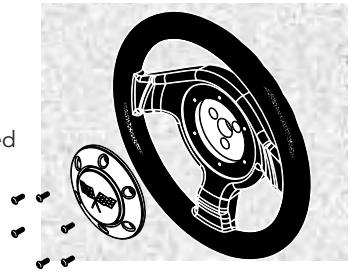

Part Number		Price per ea.	L/12
50-2845-00	USA Design	36.05	31.70

EUROPEAN DESIGN

- European inspired design
- Simulated leather look
- Molded in durable hard black plastic
- 10.3" diameter
- Bigger cap included
- Includes black plastic cap

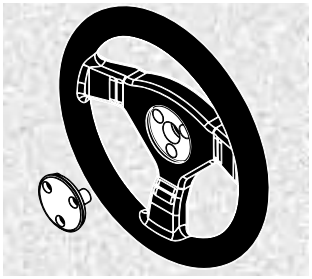

Part Number		Price per ea.	L/12
50-2846-00	European Design	38.85	33.85

ORIGINAL DESIGN

- Molded durable hard black plastic
- 10.6" diameter
- Includes black plastic cap

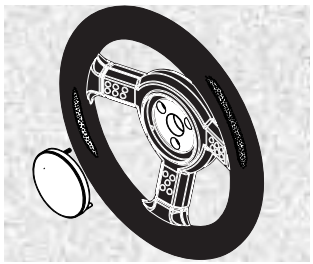

Part Number		Price per ea.	L/12
50-2843-00	Original Design	40.70	34.90

REPLACEMENT FOR DAYTONA

- New innovative "Sure-Grip" design gives better control and feel
- Molded durable black rubber
- Simply slides over existing spline main shaft of steering wheel
- 11.4" diameter
- Includes black plastic checkered flag cap and screws

Part Number		Price per ea.	L/12
50-3000-10	Replacement for Daytona	75.05	64.35

EUROPEAN TWO BUTTON DESIGN

- Simulated leather look
- Molded durable hard black plastic
- 10.3" diameter
- Includes black plastic cap

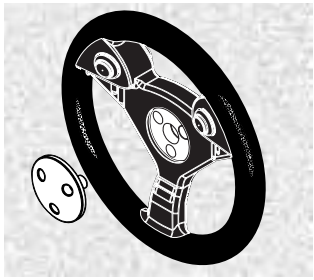

Part Number		Price per ea.	L/12
50-2847-00	European Two Button Design	51.00	43.75

REPLACEMENT 2-PIECE STEERING SHAFT FOR SEGA

- Used on Sega Daytona II Deluxe & Sega Super GT Deluxe
- Spline shaft on front for attaching steering wheel
- Unique 2-piece design allows you in the future the ability to replace only the front (95-1652-00) or rear (95-1651-00) shaft
- Made in USA

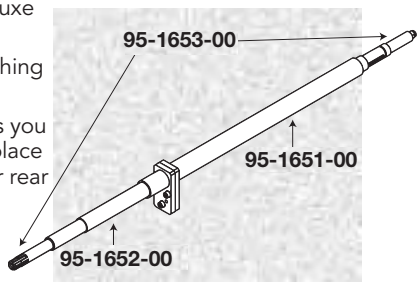

Part Number		Price per ea.
95-1653-00	Two-Piece Steering Rod Assembly for Sega	136.60
95-1652-00	Front Shaft for Steering Assembly	72.85
95-1651-00	Rear Shaft for Steering Assembly	72.85

Visit Our Web Site:
happcontrols.com
for **NEW** Product Updates!!

TURBO SPEED SHIFTER

- High-Low Speed Shift has microswitch in handle actuated by large diameter pushbutton to enable Turbo feature

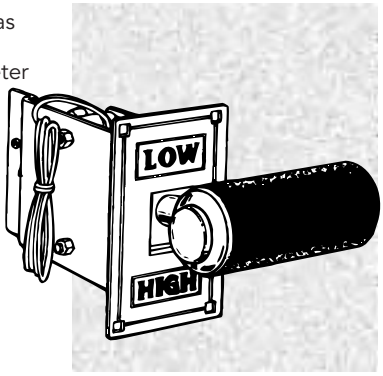

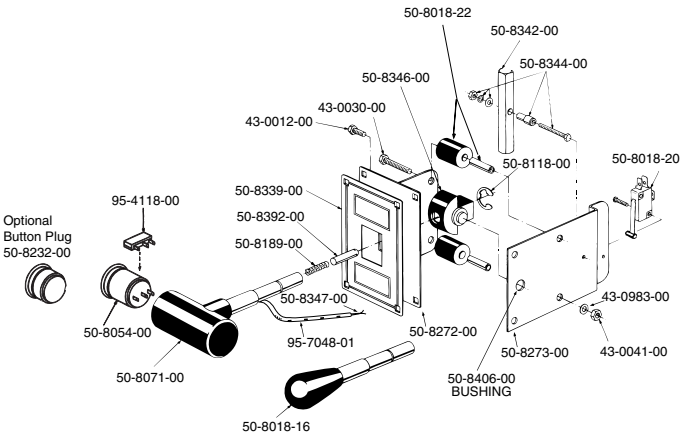

Part Number		Price per ea.	L/6
50-8017-00	Turbo Speed Shifter	53.10	48.25

SPEED SHIFTER

- Knob molded onto steel shaft
- Microswitch operation
- 2 position

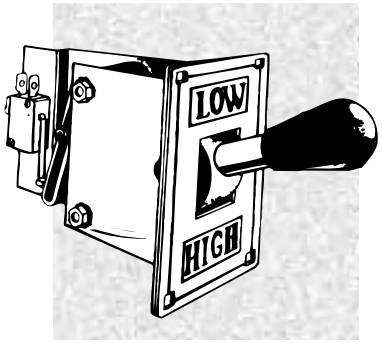

MOUNTING DIMENSIONS FOR SHIFTER WITH STANDARD HANDLE

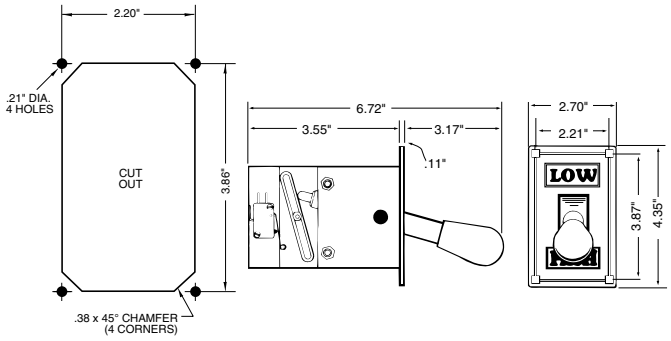

Part Number		Price per ea.	L/6
50-8018-00	Speed Shifter	42.25	39.85

UP/DOWN SHIFTER

- For multi-speed applications
- Makes switch contact in low and in high position and returns to center
- Handle available with or without thumb switch

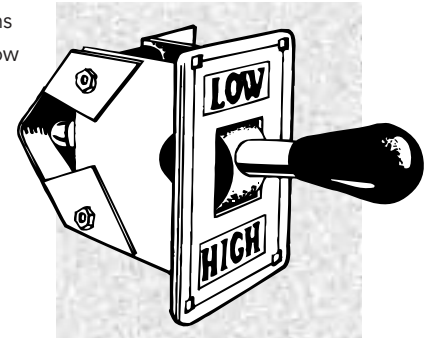

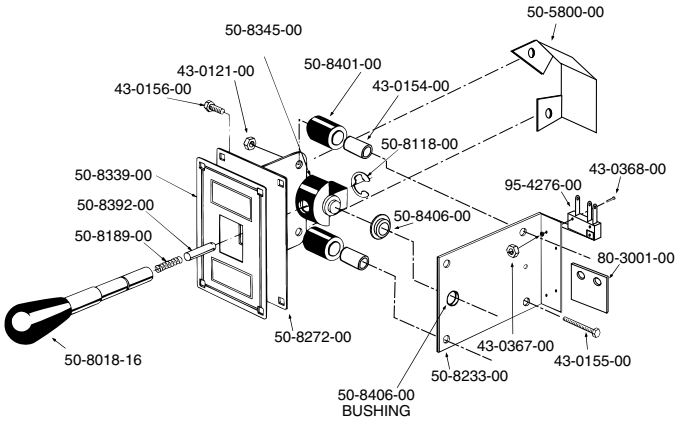

Part Number		Price per ea.	L/6
50-8110-00	Up/Down Shifter	48.25	44.65

TURBO THROTTLE

- Produces 0 to 5k ohm signal proportional to lever position
- Lever has friction to remain where last set
- High-Low Speed Shift has microswitch in handle actuated by large diameter pushbutton to enable Turbo feature

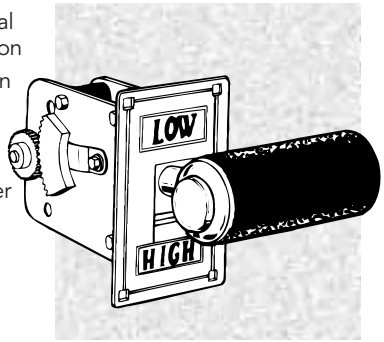

MOUNTING DIMENSIONS FOR SHIFTER WITH TURBO HANDLE

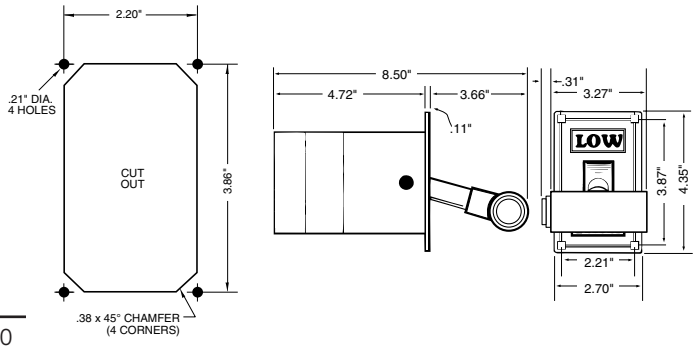

Part Number		Price per ea.	L/6
50-8184-00	Turbo Throttle with 5k pot	96.40	90.40

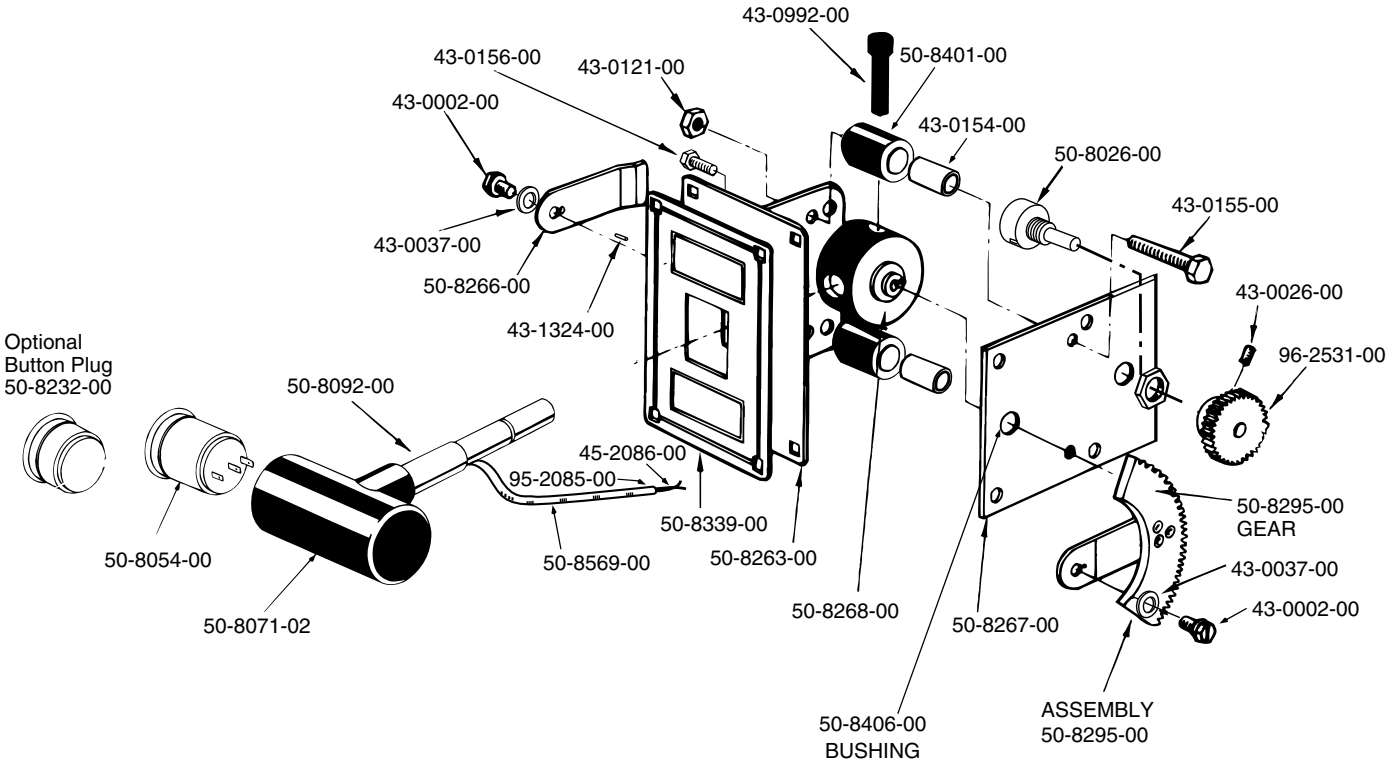

TURBO THROTTLE RETURN TO CENTER

- Produces 0 to 5k ohm signal proportional to lever position
- Available with or without thumb switch

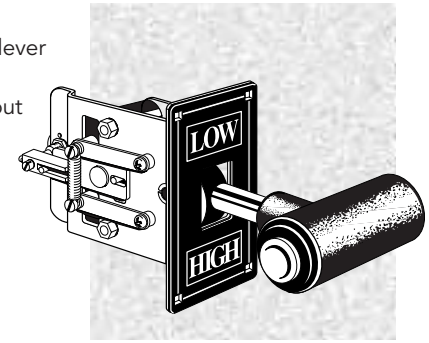

MOUNTING DIMENSIONS FOR TURBO THROTTLE RETURN TO CENTER

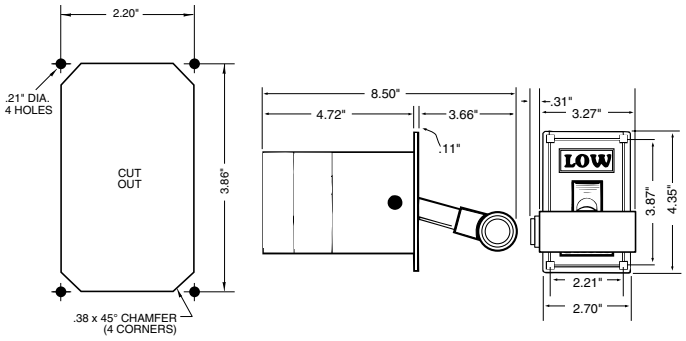

Part Number		Price per ea.	L/6
50-0083-00	Turbo Throttle Return to Center	72.35	68.70

© HAPP CONTROLS

3-SPEED SHIFTER

- 3-speed gated shifter
- Black insert molded shift knob
- 3 gold contact CHERRY microswitches

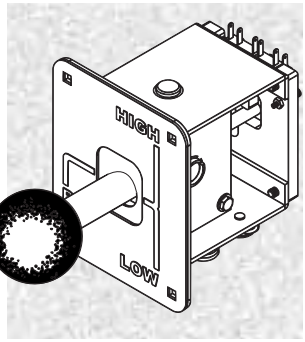

Part Number		Price per ea.	L/6
50-2770-00	3-Speed Shifter	79.20	73.50

MOUNTING DIMENSIONS FOR 3-SPEED SHIFTER

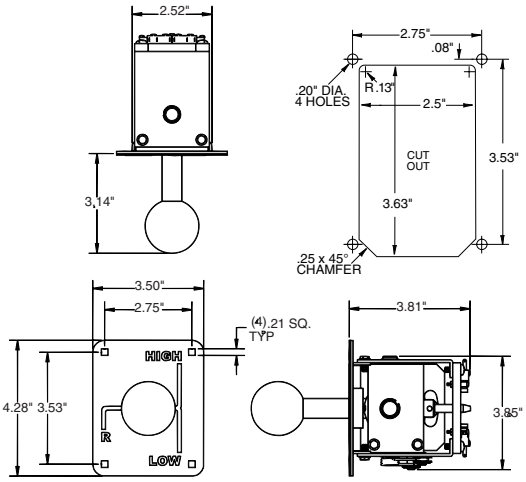

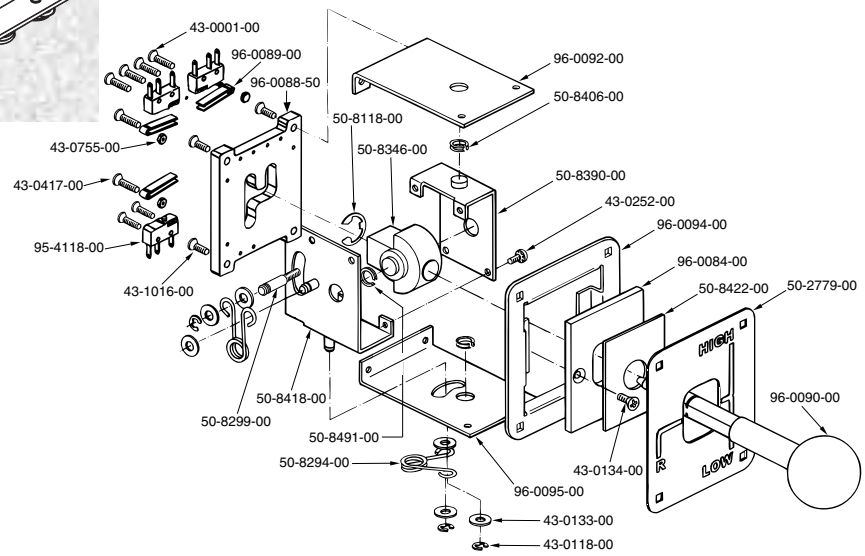

4-SPEED SHIFTER

- 4-speed gated shifter
- Black insert molded shift knob
- 4 gold contact CHERRY microswitches

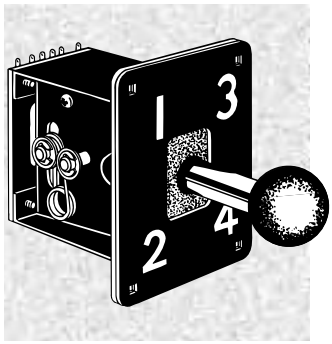

Part Number		Price per ea.	L/6
50-8496-00	4-Speed Shifter	120.55	108.50

MOUNTING DIMENSIONS FOR 4-SPEED SHIFTER

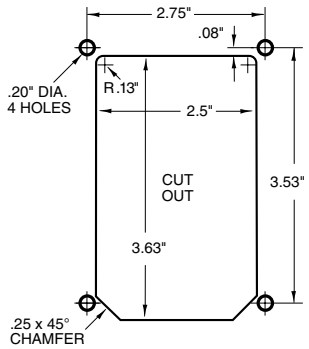

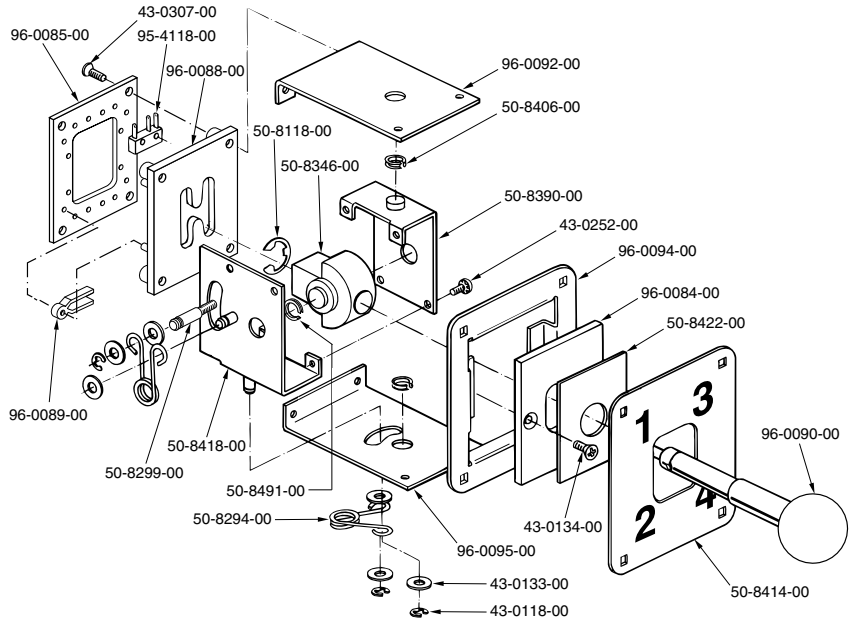

DAYTONA REPLACEMENT SHIFTER

- 4 speed gated shifter
- Black insert molded shift knob
- 4 gold contact CHERRY microswitches
- Durable replacement control for SEGA sitdown Daytona game
- Complete with mounting plate and wire harness for both USA and Japan type Daytona Game

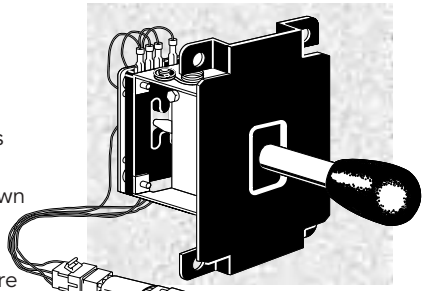

Part Number		Price per ea.	L/25
50-8500-00	Daytona Replacement Shifter	156.70	144.60

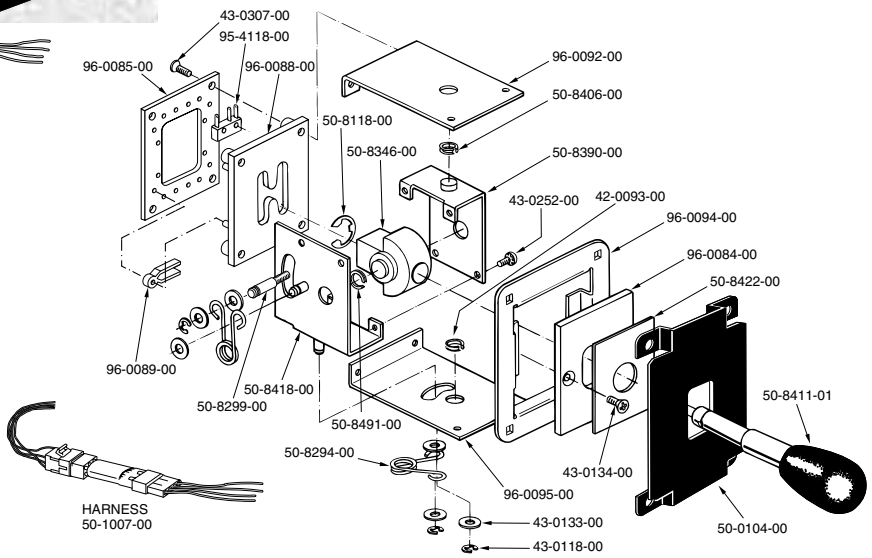

SEAT SLIDE REPLACEMENT ASSEMBLIES & PARTS

Complete Seat Slide Lower Assembly

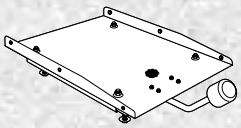

50-2801-00

Complete Seat Slide Rail Set

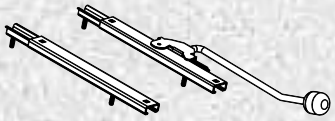

50-3025-00

Sega Daytona or Rally Retrofit Kit

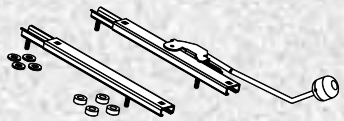

50-2859-00

Mfg	Game	Seat Slide Assy	Price per ea.	Rail Set	Price per ea.	Kit (Rail Set w/Spacers)	Price per ea.	Rail Idler	Price per ea.	Rail Locking w/Lever	Price per ea.
Atari	San Francisco Rush 2049	–	–	–	–	–	–	50-3090-00	9.70	50-3120-00	30.20
Atari	San Francisco Rush, Rock	–	–	–	–	–	–	50-3090-00	9.70	50-3120-00	30.20
Atari	San Francisco Rush	–	–	–	–	–	–	50-3090-00	9.70	50-3120-00	30.20
Atari	California Speed	50-2801-00	75.75	50-3025-00	43.70	–	–	–	–	–	–
Konami	GTI Club	50-2801-00	75.75	50-3025-15	54.60	–	–	–	–	–	–
Konami	Winding Heat	50-2801-00	75.75	50-3025-15	54.60	–	–	–	–	–	–
Midway	CART Fury	50-2801-00	75.75	50-3025-00	43.70	–	–	–	–	–	–
Midway	Cruis'n Exotica	50-2692-00	325.25	–	–	–	–	–	–	–	–
Midway	Cruis'n USA Motion	–	–	–	–	–	–	–	–	–	–
Midway	Cruis'n USA Sitdown	50-2801-00	75.75	50-3025-00	43.70	–	–	–	–	–	–
Midway	Cruis'n World	50-2801-00	75.75	50-3025-00	43.70	–	–	–	–	–	–
Midway	HydroThunder	50-2801-00	75.75	50-3025-00	43.70	–	–	–	–	–	–
Midway	Hyperdrive	50-2801-00	75.75	50-3025-00	43.70	–	–	–	–	–	–
Midway	Offroad	50-2801-00	75.75	50-3025-00	43.70	–	–	–	–	–	–
Midway	Offroad Thunder	50-2801-00	75.75	50-3025-00	43.70	–	–	–	–	–	–
Namco	Rave Racer	50-2801-00	75.75	50-3025-00	43.70	–	–	–	–	–	–
Namco	Ridge Racer	–	–	–	–	–	–	–	–	–	–
Namco	Speed Up	50-2801-00	75.75	50-3025-00	43.70	–	–	–	–	–	–
SEGA	Daytona Twin	–	–	–	–	50-2859-00	64.50	–	–	–	–
SEGA	Rally Twin	–	–	–	–	50-2859-00	64.50	–	–	–	–
SNK	Roads Edge	50-2801-00	75.75	50-3025-00	43.70	–	–	–	–	–	–

© HAPP CONTROLS

ACTUATOR SPRING FOR 4-SPEED SHIFTER

- Used on Happ Controls 4-speed shifters (50-8496-00)
- Hardened formed steel

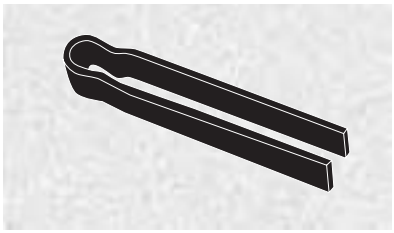

Part Number		Price per ea.
96-0089-00	Actuator Spring for 4-Speed Shifter	4.65

MICROSWITCH

- For individual replacement of switches for Pinball Switches, 4-Speed Shifters
- High CHERRY Quality switch
- DA3 .110 terminal, Gold Contact, 90 Gram (standard) actuating force
- Switch color: Black

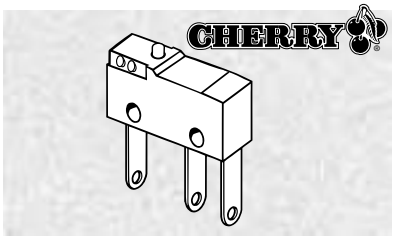

Part Number		Price per ea.	L/100
95-4118-00	Microswitch	3.15	2.50

LONG ARM SWITCH WITH ROLLER ACTUATOR

- Used on Happ Controls shifters
- 10 amps
- 125/250 volts
- .250 terminals

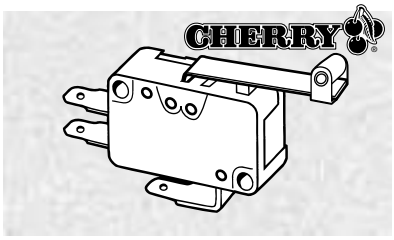

Part Number		Price per ea.
50-8018-20	Long Arm Switch w/Actuator	4.30

SNAP SWITCH FOR UP/DOWN SHIFTER

- Replacement switch for Happ Controls Up/Down Shifter (50-8110-00)
- 7 amps
- 125/250 volts
- .110 terminals
- Cherry DA3 switch

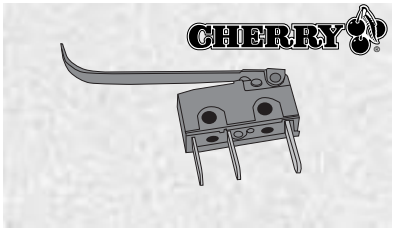

Part Number		Price per ea.
95-4276-00	Snap Switch for Up/Down Shifter	4.90

HANDLE GRIP FOR ARTIC THUNDER

- Original OEM grip for Midway Artic Thunder
- Black rubber with knurled surface
- 5" long, fits 1" diameter shaft

MIDWAY

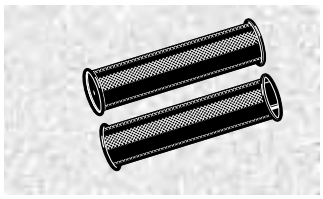

Part Number		Price per ea.
95-1457-00	Handle Grip for Artic Thunder	5.20

REPLACEMENT POTENTIOMETERS

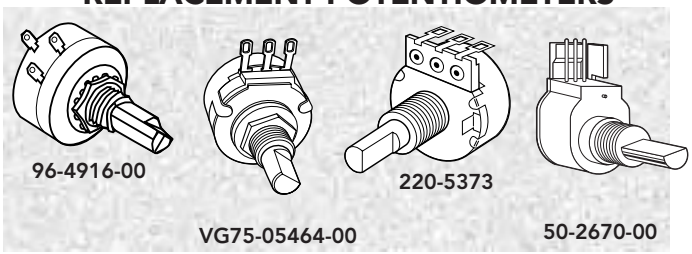

Part Number		Price per ea.
VG75-05464-00	Replacement 1K Pot Namco 40° Namco Ref. VG75-05464-00	45.25
VG75-03824-00	Replacement 1K Pot Namco 60° Namco Ref. VG75-03824-00	43.75
220-5373	Replacement 5K Pot Sega	21.90
96-4916-00	Replacement 5K Long Life Pot .50" Shaft Namco Ref. VG80-02975 WMS Ref:5014-12909-00	37.45
50-8026-02	Replacement 5K Pot .750" Shaft Namco Ref. AC75-04425-00	11.00
50-8056-00	Replacement 5K Pot 7/8" Shaft	19.35
50-8026-00	Replacement 5K Pot 1.125" Shaft Namco Ref. VG75-06089-00	11.00
SG09-008-006	Replacement 5K Pot Namco 1.125" Shaft Namco Ref. SG09-008-006	50.95
3541H-1-103	Replacement 10K Bourns Pot Atari for Hard Driving	80.20
50-2670-00	Replacement 5K NEI (Sensorcube) w/Connector	22.95
50-2064-00	Replacement 5K Pot for Happ Joysticks "S" Taper, 3/4" Shaft	32.15
50-2032-00	Replacement 100K Pot for Happ, Joysticks "S" Taper, 3/4" Shaft	25.70
50-0153-00	Replacement 100K Pot for Happ Steering Wheels	15.15

REPLACEMENT SCREWS FOR ATTACHMENT HOOP TO HUB

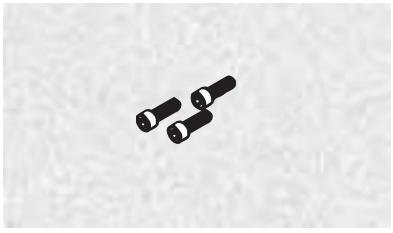

Part Number		Price per ea.
43-0328-00	Replacement Screws For Attachment Hoop To Hub	.38

SEAT FOR MIDWAY ARCTIC THUNDER

- Original OEM seat
- Blue molded plastic with Midway logo
- Used on Midway Artic Thunder cabinets
- Made in USA

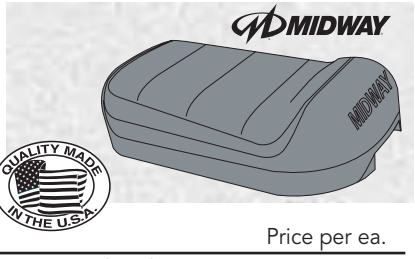

Part Number		Price per ea.
04-12950	Seat for Midway Arctic Thunder	280.95

SEAT SLIDE ASSEMBLIES

- Full range of seat adjustment positions allows unlimited adjustment for all size of players
- Heavy-duty metal construction of slide rails provide trouble-free operation
- Easier mounting for OEM applications
- 6.4" range of travel
- Black nylon knob

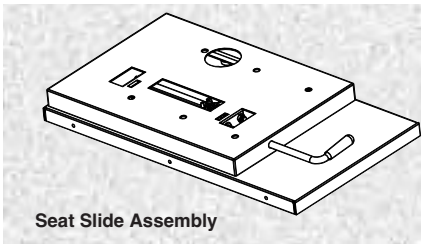
Seat Slide Assembly

OVERALL DIMENSIONS

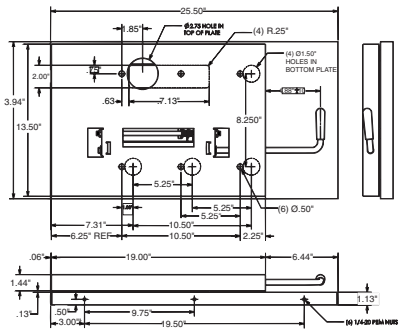

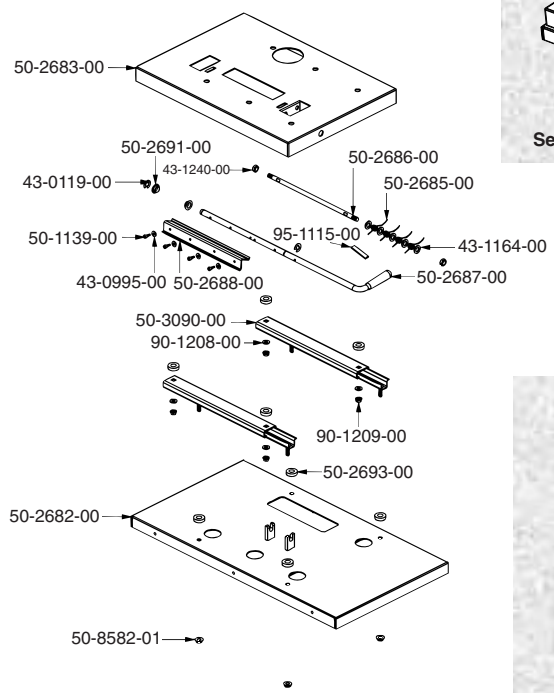

Seat Slide Assembly With Seat Mounted

Part Number		Price per ea.
50-2692-00	Seat Slide Assembly for Crusin Exotica	325.25
50-3137-00	Seat Slide Assembly for Speaker Seat	325.25

SEAT SLIDE ASSEMBLY

- Allows player a full range of seat adjustment positions to allow adjustment for all size of players
- Precise heavy-duty metal construction of slide rails provide trouble-free operation
- Large white knob extends from seat slide base to allow easy adjustment while sitting
- 4" range of travel

MOUNTING DIMENSIONS

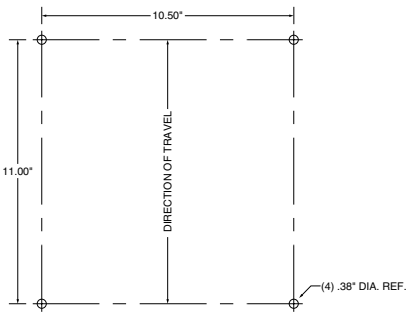

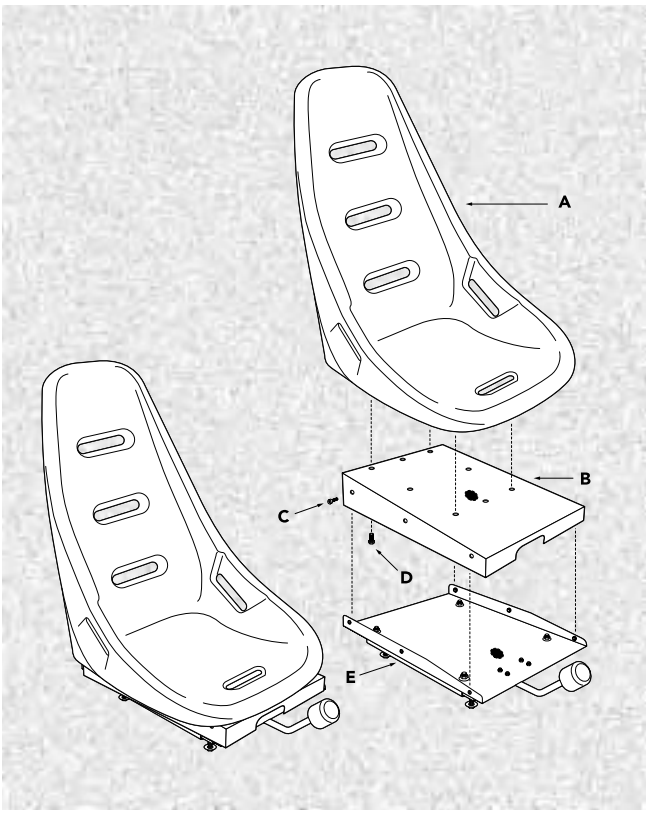

Part Number	Key		Price per ea.
49-0501-00	A	Black Plastic Seat, Model 2600	210.80
49-0502-00	B	Seat Mounting Base for Seat Slide	108.50
43-0347-00	C	T-27 Torx Screw for Seat Slide	.53
43-0366-00	D	Seat Anchor Screw for Seat Slide	.15
50-2801-00	E	Seat Slide Lower Assembly	75.75

© HAPP CONTROLS

SEAT PEDESTAL ASSEMBLY

NEW

- Durable and Stylish design for driving game
- Modular design provides numerous OEM configuration possibilities
- Seat Color
- Speaker Configuration
- Side and or seat graphics
- Real metal exhaust pipes with additional speakers built in
- Functional brake lights
- Shifter (2, 3 or 4-Speed)
- Base is Black one-piece molded plastic with locking casters
- Seat slide mounts to base

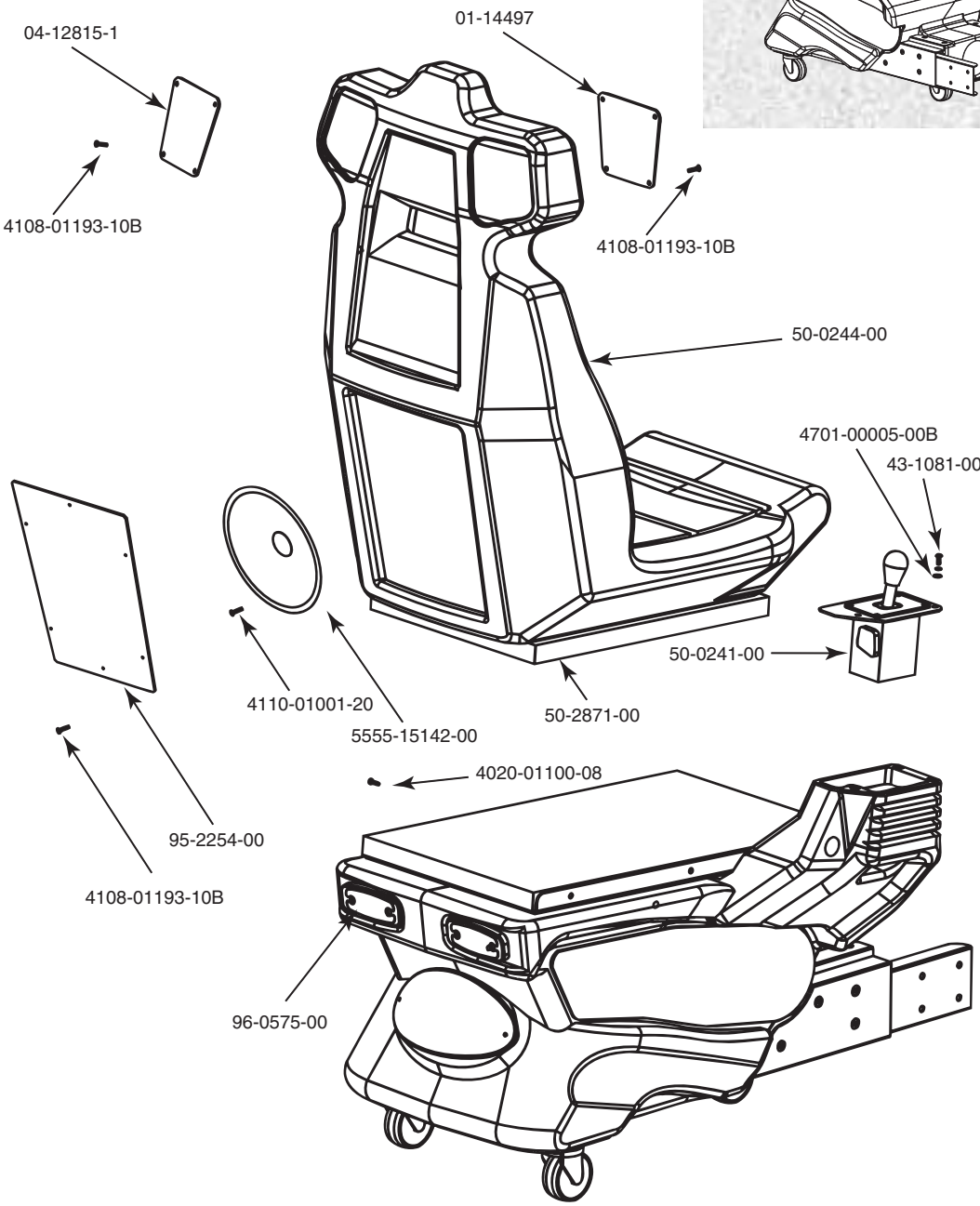

Part Number		Price per ea.
Call for Part Number	Seat Pedestal Assembly	Call

MOLDED SEAT FOR MIDWAY CRUIS'N WORLD AND OFFROAD CHALLENGE

NEW

- Original Midway seat for Cruis'n World and Offroad Challenge
- Made of durable molded plastic
- Color: Black
- Made in USA
- Dimensions: 33.8" H x 27.4" D x 20.6" W
- Note: For seat slide replacement parts see page 292

Part Number		Price per ea.
04-10173	Molded Seat for Midway Cruis'n World and Offroad Thunder	169.15

MOLDED SEAT FOR MIDWAY CALIFORNIA SPEED

NEW

- Original Midway seat for California Speed
- Made of durable molded plastic
- Color: Blue
- Made in USA
- Dimensions: 33.8" H x 27.4" D x 20.6" W
- Note: For seat slide replacement parts see page 292

Part Number		Price per ea.
04-10173-1	Molded Seat for Midway California Speed	172.90

© HAPP CONTROLS

MOLDED SEAT FOR MIDWAY HYDROTHUNDER

NEW

- Original Midway seat for Hydrothunder
- Made of durable molded plastic
- Color: Teal
- Made in USA
- Dimensions: 33.5" H x 29.13" D x 19.54" W
- Note: For seat slide replacement parts see page 292

Part Number		Price per ea.
04-11100	Molded Seat for Midway Hydrothunder	176.55

MOLDED SEAT FOR MIDWAY CRUIS'N EXOTICA

NEW

- Original Midway seat for Cruis'n Exotica
- Made of durable molded plastic
- Color: Purple
- Made in USA
- Dimensions: 34.38" H x 28.7" D x 20.7" W
- Note: For seat slide replacement parts see page 292

Part Number		Price per ea.
04-12452-3	Molded Seat for Midway Cruis'n Exotica	176.55

MOLDED SEAT FOR MIDWAY CRUIS'N EXOTICA

NEW

- Original Midway seat for Cruis'n Exotica
- Made of durable molded plastic
- Color: Black
- Made in USA
- Dimensions: 34.38" H x 28.7" D x 20.7" W
- Note: For seat slide replacement parts see page 292

Part Number		Price per ea.
04-12452-4	Molded Seat for Midway Cruis'n Exotica	176.55

MOLDED SEAT FOR MIDWAY CRUIS'N

- Original Midway seat for Cruis'n
- Made of durable molded plastic
- Color: Red
- Made in USA
- Dimensions: 34.38" H x 28.7" D x 20.7" W
- Note: For seat slide replacement parts see page 292

Part Number		Price per ea.
04-12452-5	Molded Seat for Midway Cruis'n	176.55

© HAPP CONTROLS

MOLDED SEAT FOR MIDWAY OFFROAD THUNDER

- Original Midway seat for Offroad Thunder
- Made of durable molded plastic
- Color: Yellow
- Made in USA
- Dimensions: 33.5" H x 29.13" D x 19.54" W
- Note: For seat slide replacement parts see page 292

Part Number		Price per ea.
04-12731	Molded Seat for Midway Offroad Thunder	176.55

MOLDED SEAT FOR MIDWAY C.A.R.T FURY

NEW

- Original Midway seat for C.A.R.T. Fury
- Made of durable molded plastic
- Color: Red
- Made in USA
- Dimensions: 33.5" H x 29.13" D x 19.54" W
- Note: For seat slide replacement parts see page 292

Part Number		Price per ea.
04-12674-2	Molded Seat for Midway C.A.R.T. Fury	176.55

MOLDED SEAT FOR MIDWAY SAN FRANCISCO RUSH THE ROCK

NEW

- Original Midway seat for San Francisco Rush The Rock
- Made of durable molded plastic
- Color: Lime Green
- Made in USA
- Dimensions: 33.5" H x 29.13" D x 19.54" W
- Note: For seat slide replacement parts see page 292

Part Number		Price per ea.
04-10630	Molded Seat for Midway San Francisco Rush The Rock	176.55

MOLDED SEAT FOR MIDWAY C.A.R.T FURY

NEW

- Original Midway seat for C.A.R.T. Fury
- Made of durable molded plastic
- Color: Black
- Made in USA
- Dimensions: 33.5" H x 29.13" D x 19.54" W
- Note: For seat slide replacement parts see page 292

Part Number		Price per ea.
04-12674-1	Molded Seat for Midway C.A.R.T. Fury	176.55

© HAPP CONTROLS

MOLDED SEAT FOR MIDWAY RUSH 2049

NEW

- Original Midway seat for Rush 2049
- Made of durable molded plastic
- Color: Black
- Made in USA
- Dimensions: 33.5" H x 29.13" D x 19.54" W
- Note: For seat slide replacement parts see page 292

Part Number		Price per ea.
04-12674	Molded Seat for Midway Rush 2049	176.55

DUAL PEDAL

MOUNTING DIMENSIONS

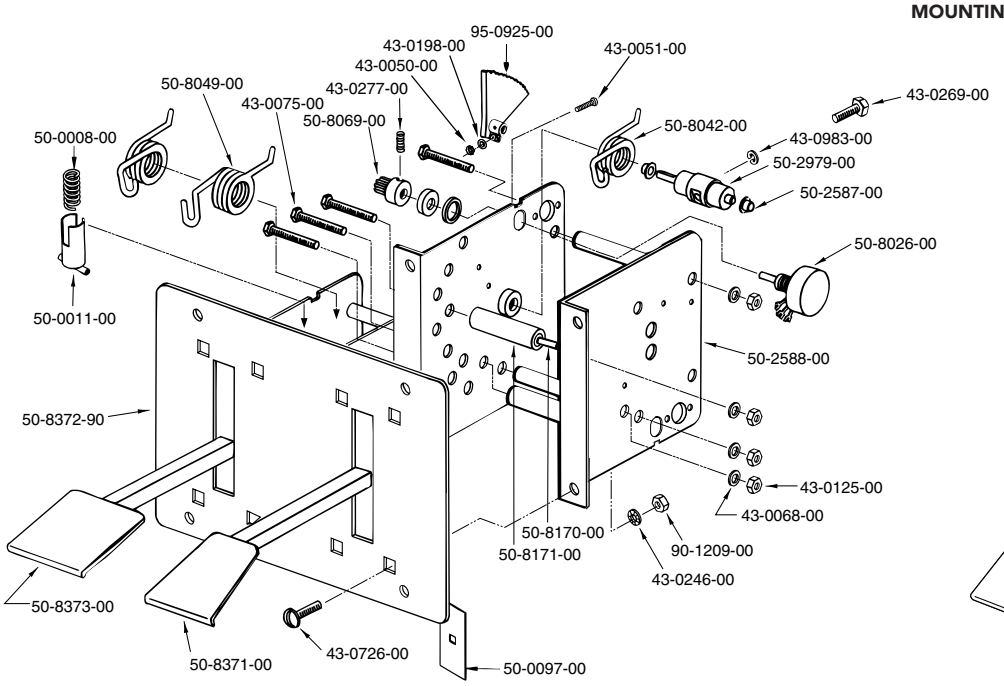

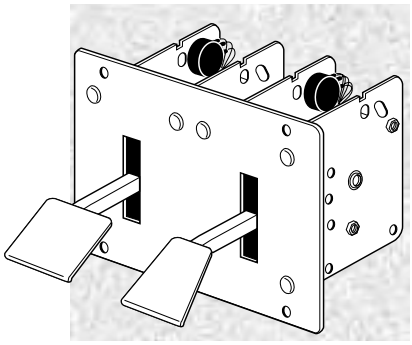

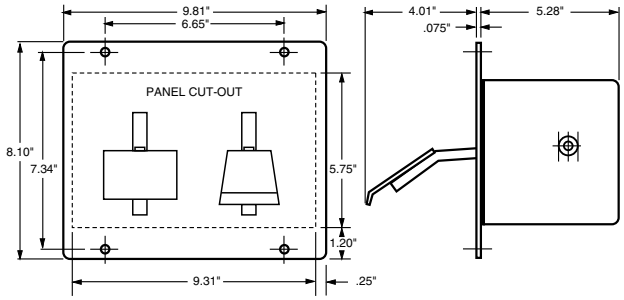

- Steel Construction
- 5K potentiometers or microswitch versions available

Part Number		Price per ea.	L/6
50-2661-00	Dual Pedal with Dual 5k Pots	160.25	144.60
50-2661-10	Dual Pedal with Microswitches	160.25	144.60

TRIPLE PEDAL

- Steel construction
- Triple 5k pot construction
- Allows for realistic driving simulation using gas, clutch and brake
- Pedal dampener to allow for realistic clutch function
- Microswitch or pots available

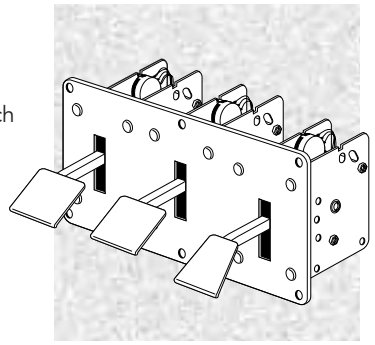

MOUNTING DIMENSIONS

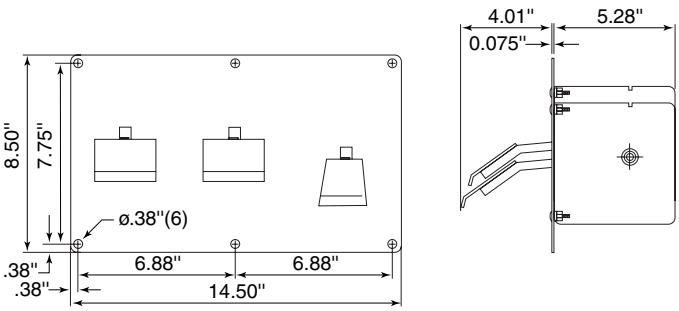

Part Number		Price per ea.	L/6
50-8595-01	Triple Pedal with 5k Potentiometer	234.95	210.80

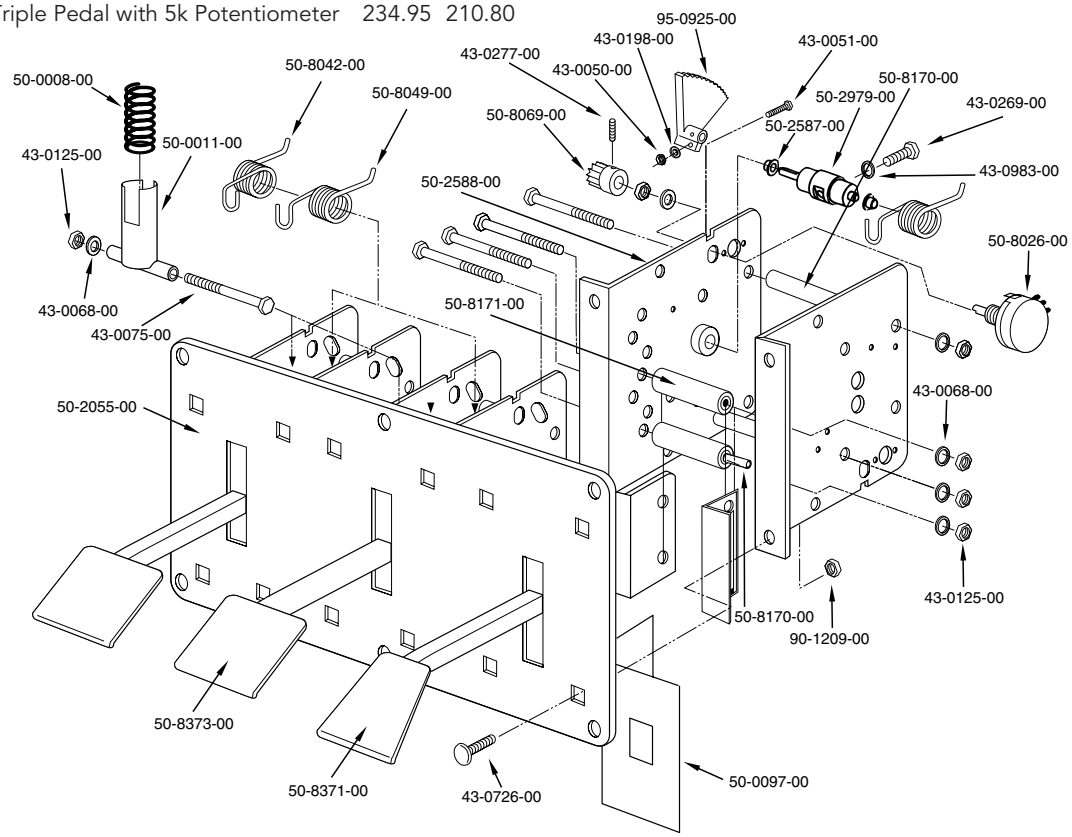

KEY SWITCH

- Simulates automobile ignition switch
- Durable steel construction
- Ideal for any driving game

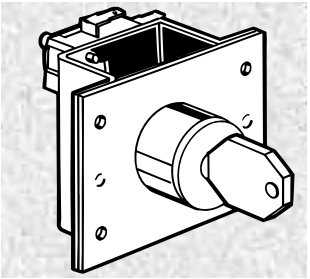

Part Number		Price per ea.	L/6
50-6003-00	45° Key Switch	37.90	34.50

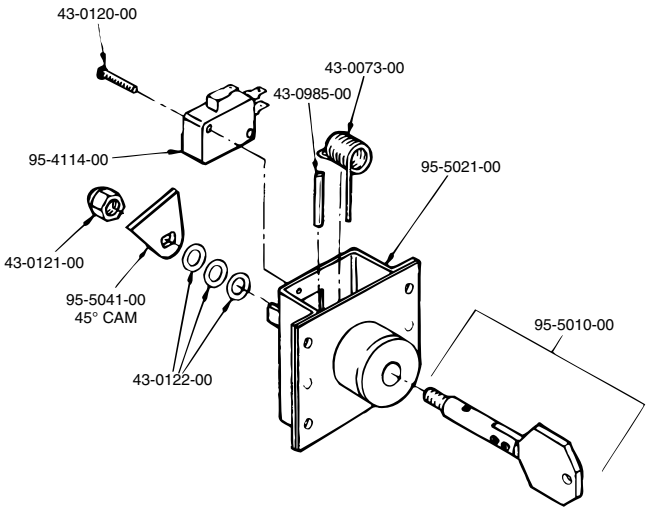

MOUNTING DIMENSIONS

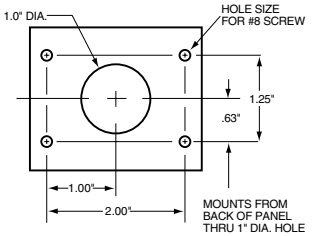

© HAPP CONTROLS

FLAT PEDAL

- Steel construction
- With microswitch or with 5k potentiometer
- Simple and compact
- Easy to mount

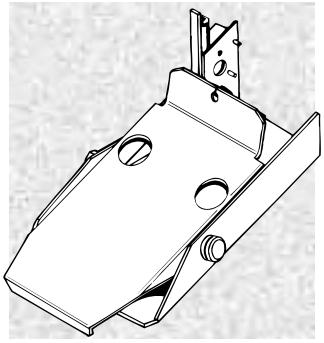

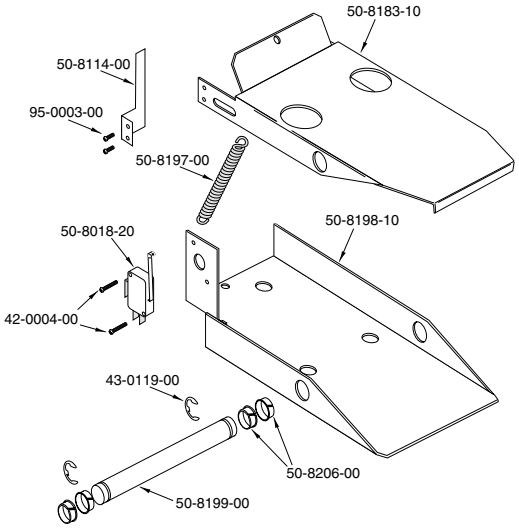

Part Number		Price per ea.	L/6
50-8195-00	Flat Pedal with Microswitch	38.65	35.00
50-8197-00	Spring for Flat Pedal	3.60	3.35

MOUNTING DIMENSIONS

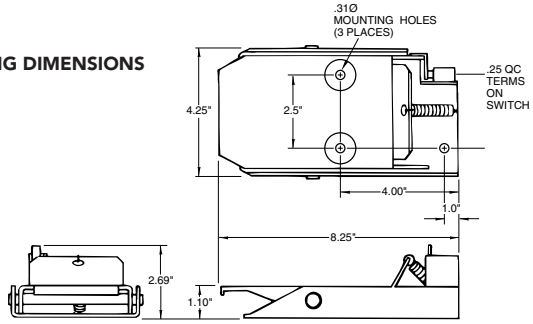

KIT STYLE PEDAL

- Self contained housing for front cabinet mounting
- Replacement part for **Atari® World Rally Game**

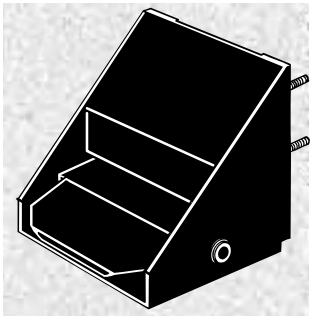

MOUNTING DIMENSIONS

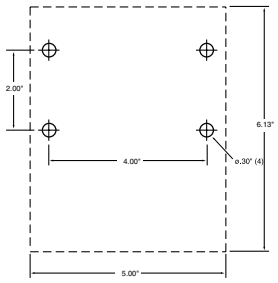

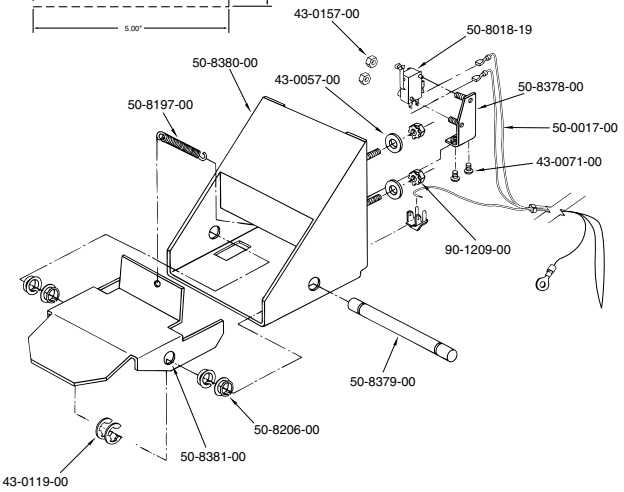

Part Number		Price per ea.	L/6
50-8400-00	Kit Style Pedal with Microswitch	67.50	60.35

MODULAR PEDAL

- Steel construction
- With microswitch or with 5k potentiometer
- Suitable for exposed location

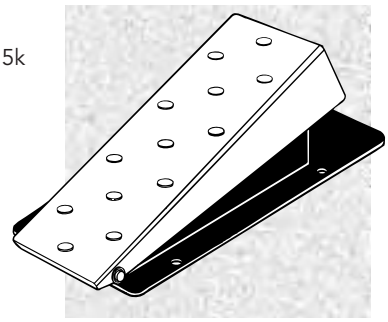

MOUNTING DIMENSIONS

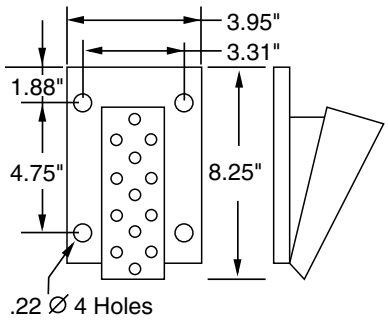

Part Number		Price per ea.	L/6
50-8194-00	Modular Pedal with Microswitch	54.30	48.25
50-8194-02	Modular Pedal with 5K Potentiometer	54.30	48.25

GAS PEDAL - FLOOR MOUNT

- Floor mount
- Allows for realistic driving simulation
- Steel construction
- With 5k potentiometer

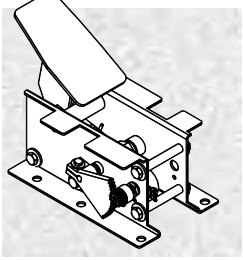

Part Number		Price per ea.	L/6
50-2828-00	Gas Pedal - Floor Mount	147.50	131.15

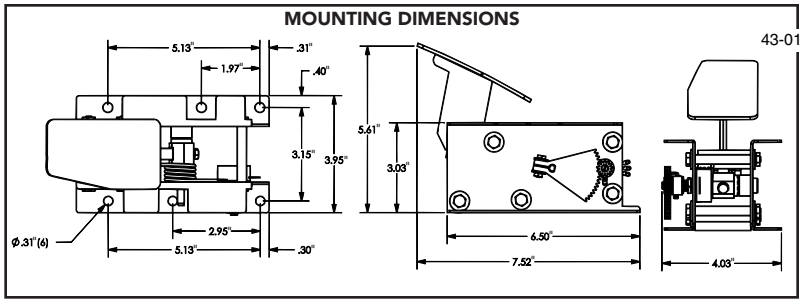

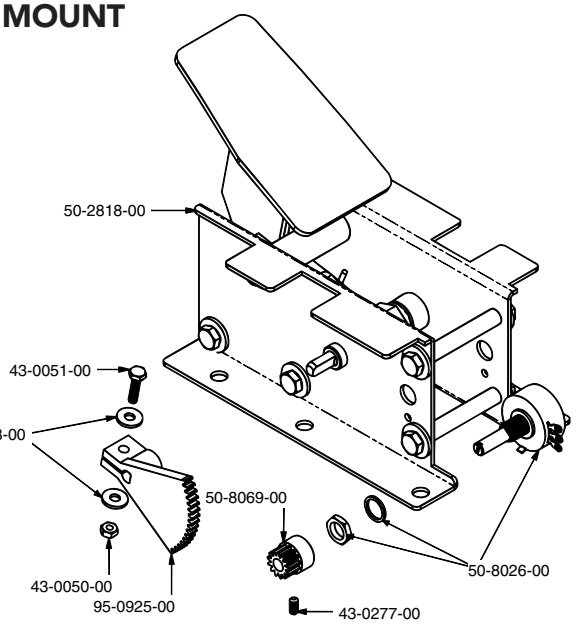

BRAKE PEDAL - FLOOR MOUNT

- Floor mount
- Allows for realistic driving simulation
- Steel construction
- With 5k potentiometer

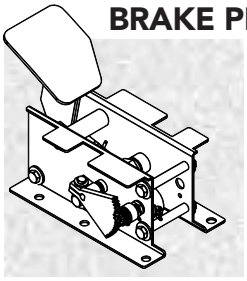

Part Number		Price per ea.	L/6
50-2829-00	Brake Pedal - Floor Mount	147.50	131.15

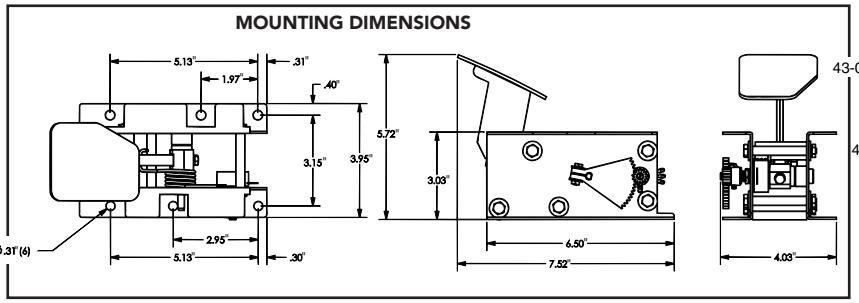

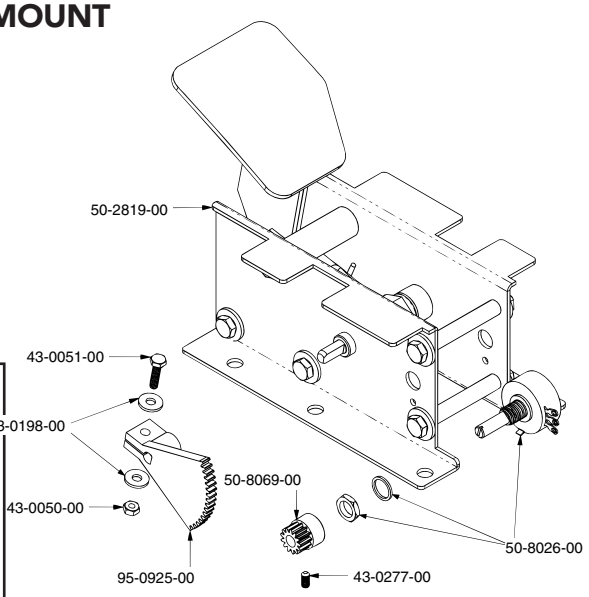

DAYTONA STYLE DUAL PEDAL ASSEMBLY - FLOOR MOUNT

NEW

- Floor mount
- Allows for realistic driving simulation
- Steel construction
- 5k potentiometer on gas
- Microswitch on brake

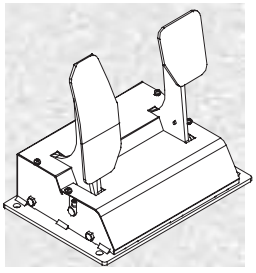

Part Number		Price per ea.	L/6
50-0287-00	Daytona Style Dual Pedal Assy.	215.00	195.00

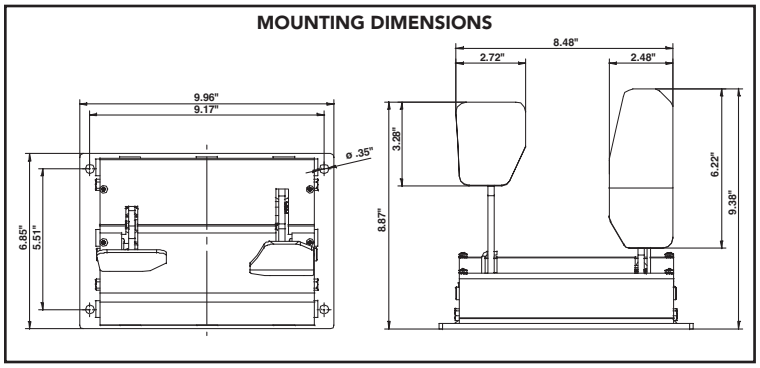

© HAPP CONTROLS

ULTIMATE JOYSTICK

- Precision engineered for the "Ultimate" in game playing feel
- Rugged, yet simple, construction
- Very smooth, spring return-to-center
- Microswitch reliability tested to 10,000,000 cycles
- Adjustable shaft length for metal or wood mounting
- .187" terminal Silver Contact Microswitch Standard
- Gold Contact Microswitch optional

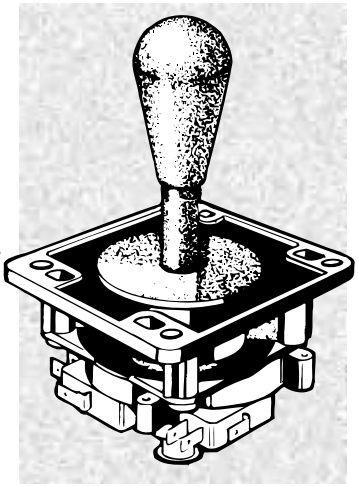

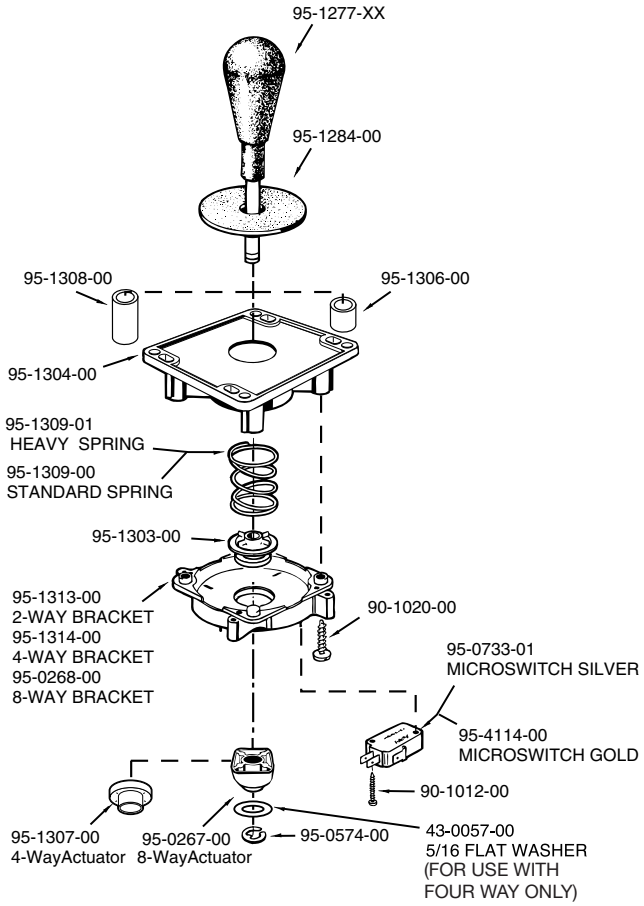

COLOR CODE

XX = Color
10 = Red
12 = Blue
13 = Green
15 = Yellow
16 = Black

MOUNTING DIMENSIONS

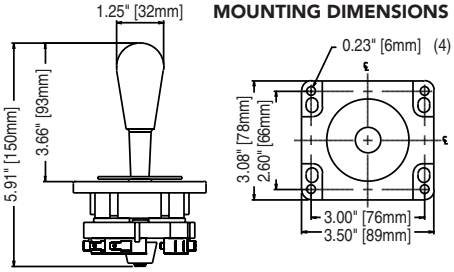

Part Number		Price per ea.	L/25
50-7608-XX	Ultimate Joystick, 8-way, Microswitch	13.35	10.90
50-7604-XX	Ultimate Joystick, 4-way, Microswitch	13.35	10.90
50-7602-XX	Ultimate Joystick, 2-way, Microswitch	13.35	10.90

COMPETITION JOYSTICK

- Fits wood and metal control panels
- Spring return-to-center
- 8-way operation
- Microswitch reliability tested to 10,000,000 cycles
- .187" terminal Silver Contact Microswitch Standard
- Gold Contact Microswitch optional
- 8-way only

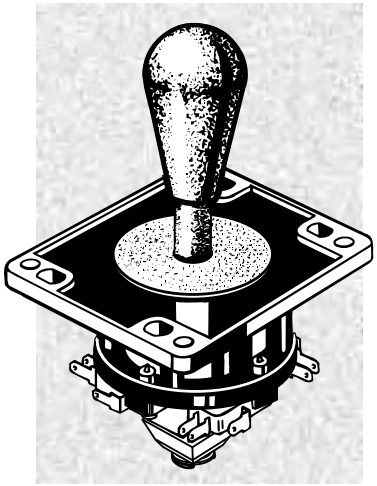

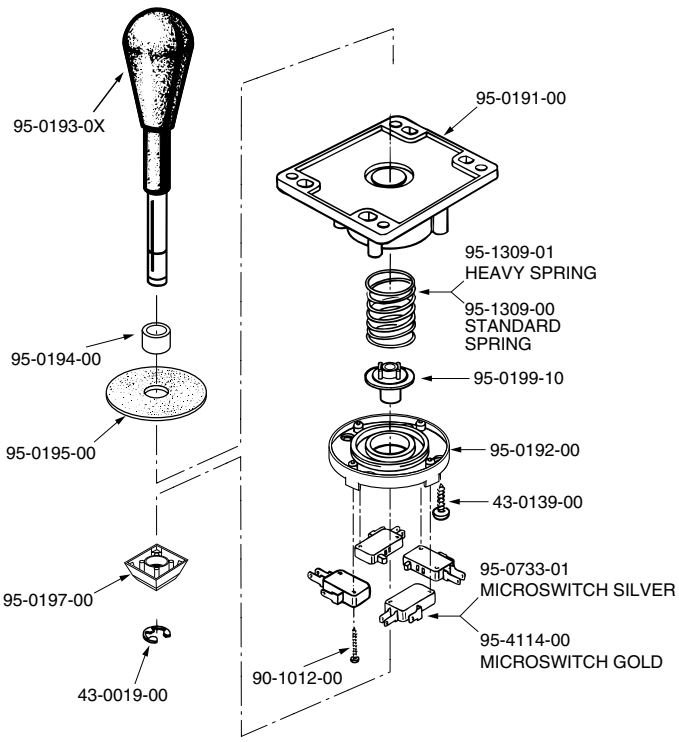

COLOR CODE

XX = Color
0 = Red
2 = Blue
3 = Green
5 = Yellow
6 = Black

MOUNTING DIMENSIONS

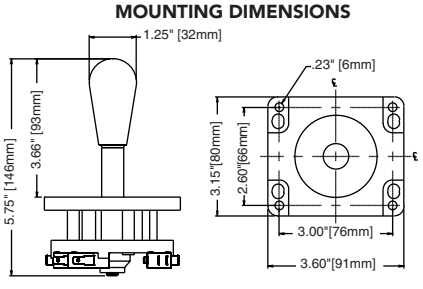

Part Number		Price per ea.	L/25
50-6070-1X	Competition Joystick, 8-way, Microswitch	13.35	10.90

SUPER JOYSTICK

- Nylon and solid steel construction
- Microswitch reliability tested to 10,000,000 cycles
- Unique handle design
- Spring return-to-center
- Rugged construction, our strongest joystick
- Change actuation to 4-way or 8-way simply by flipping actuator over
- Adjustable shaft length for metal or wood mounting
- .187" terminal Silver Contact Microswitch Standard
- Gold Contact Microswitch optional

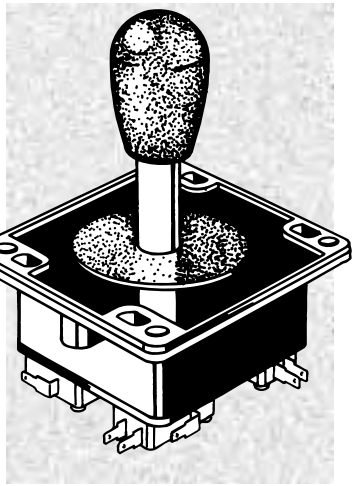

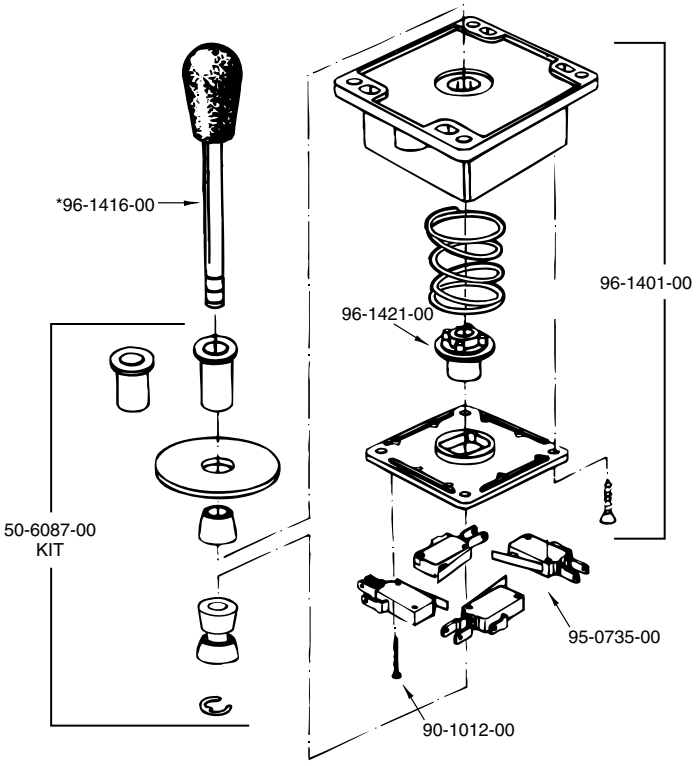

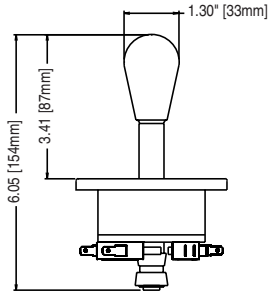

MOUNTING DIMENSIONS

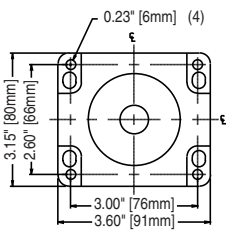

Part Number		Price per ea.	L/25
50-6084-00	Super Joystick (4 & 8-way) Microswitch	14.50	12.05

*Available in black knob only

UNIVERSAL JOYSTICK

- Simple universal mounting on wood or metal
- 8-way or 4-way, simply reposition base stop
- Low profile knob, molded nylon and steel construction
- Microswitch reliability tested to 10,000,000 cycles
- .187" terminal Silver Contact Microswitch Standard
- Gold Contact Microswitch optional

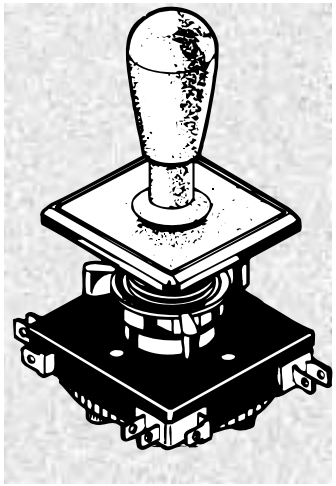

MOUNTING DIMENSIONS

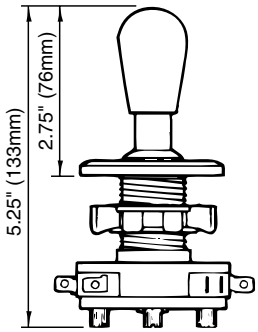

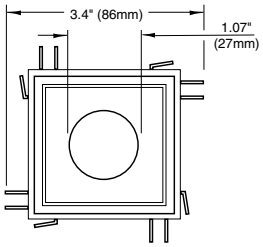

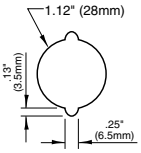

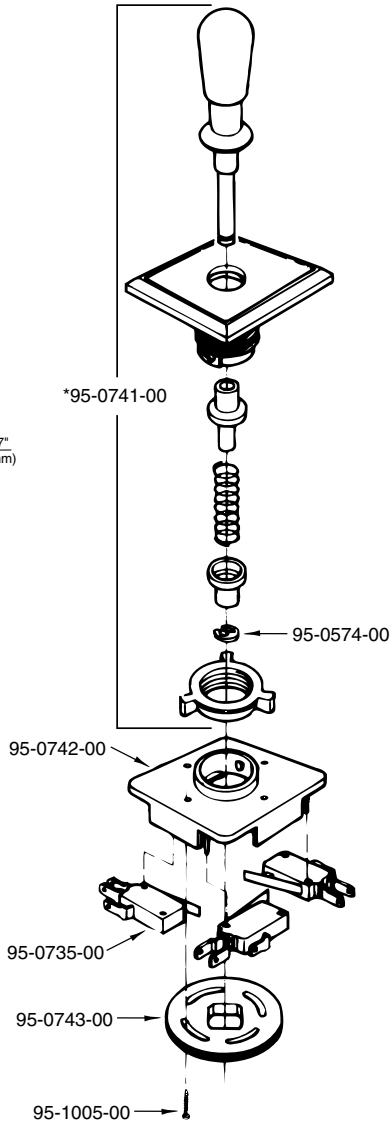

Part Number		Price per ea.	L/25
50-6048-00	Universal Microswitch Joystick (4 & 8-way)	15.70	14.50

*Available in black knob only

© HAPP CONTROLS

ROTARY & OPTICAL JOYSTICK

- 12 position rotary switch
- "IKARI warrior" game type
- Complete with harness and connector
- 8-way microswitch operation
- Microswitch reliability tested to 10,000,000 cycles
- Available with Optical encoder assembly
- Optical Rotary joystick fits "50 Caliber" and similar games
- .187" terminal Silver Contact Microswitch Standard
- Gold Contact Microswitch optional

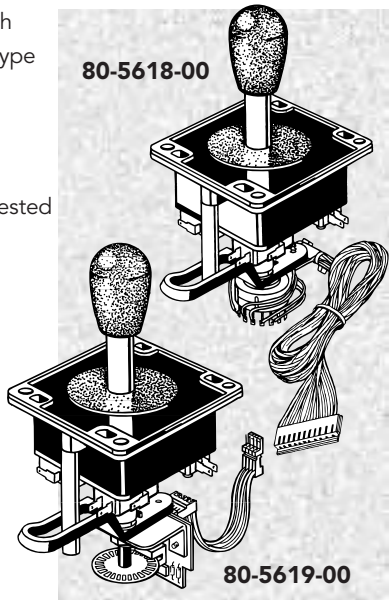

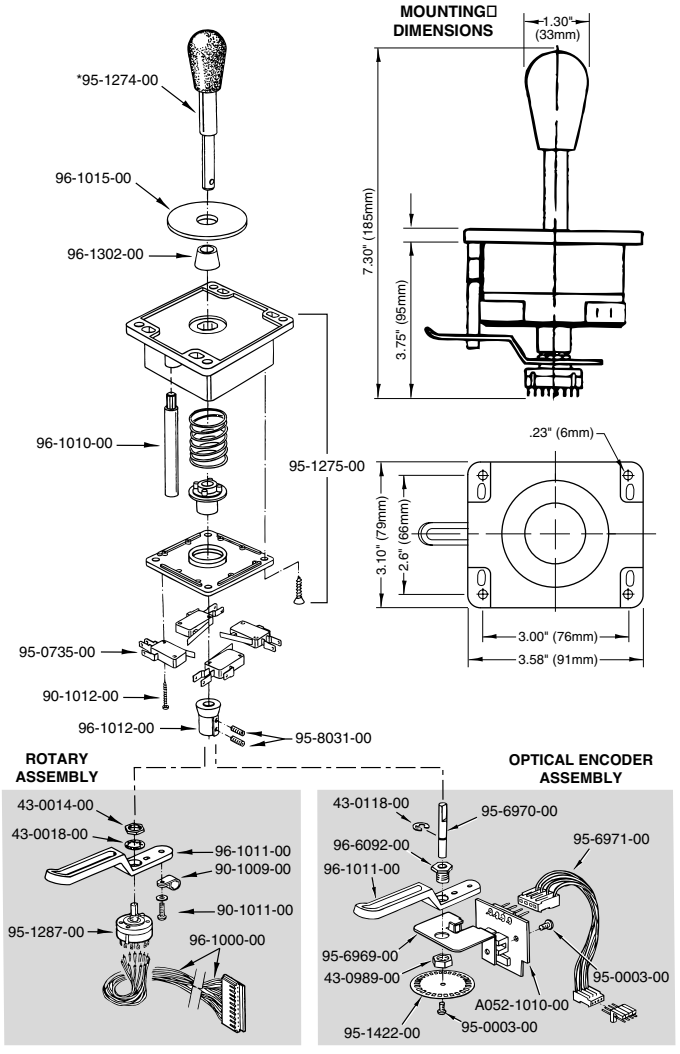

Part Number		Price per ea.	L/25
50-5618-00	8-way Rotary Joystick	43.35	36.15
50-5619-00	8-way Optical Rotary Joystick	48.15	40.95

*Available in black knob only

REPLACEMENT JOYSTICK FOR MS PAC-MAN/GALAGA

- For use within NAMCO 20 Year Reunion MS Pac-Man / GALAGA cabinet
- Nylon and solid steel construction
- Microswitch reliability tested to 10,000,000 cycles
- Round 1.25" red knob offers familiar feel like original
- Spring return-to-center
- Rugged construction
- 4-way action
- For use on metal control panel only
- Shaft size is .394" diameter

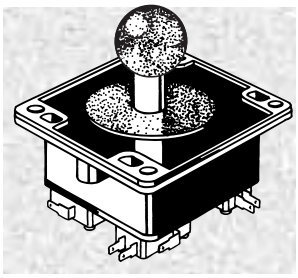

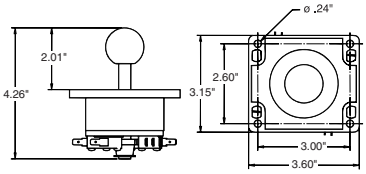

Note: This joystick does not have the same mounting plate as the original Pac-Man games

Part Number		Price per ea.
50-6084-1125R	MS Pac-Man/Galaga Joystick	21.90

REPLACEMENT JOYSTICK FOR ORIGINAL PAC-MAN GAMES

- For use within original Pac-Man game cabinets
- Mounts into the original Pac-Man game control panel without any modifications
- Round 1-3/8" red knob offers same feel as the original
- Shaft height is same as original for same feel
- Shaft size is .394" diameter
- Nylon and solid steel construction
- Microswitch reliability tested to 10,000,000 cycles
- Spring return-to-center
- Rugged construction
- 4-way action
- For use on metal control panel only

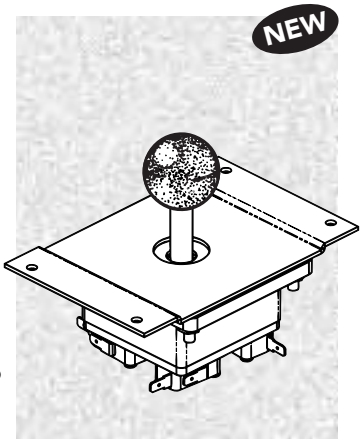

Part Number		Price per ea.
50-6084-112	Replacement Joystick for Pac-Man Games	65.60

PERFECT 360° ELECTRONIC JOYSTICK

- Photo electronic switching used instead of conventional switches, for long life
- Precise 45 degree and 90 degree 4-way or 8-way operation
- Sensitive response for incredible game control
- Rugged construction
- Bottom of joystick labeled for easy hook-up
- .187" quick-connect terminals

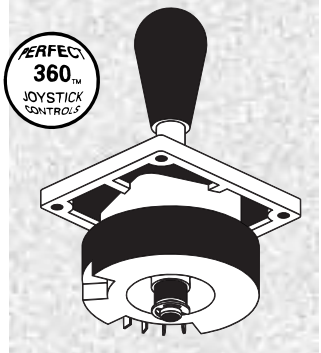

Part Number		Price per ea.	L/12
50-6083-50	Perfect 360° 4-way/8-way Joystick	41.35	40.15

TOP FIRE BUTTON COMPACT JOYSTICK

- Nylon and steel construction
- Microswitch reliability tested to 10,000,000 cycles
- Available in 2, 4 or 8 way operation
- Compact size, installs in 2.5 inches
- .187" terminal Silver Contact Microswitch Standard
- Gold Contact Microswitch optional

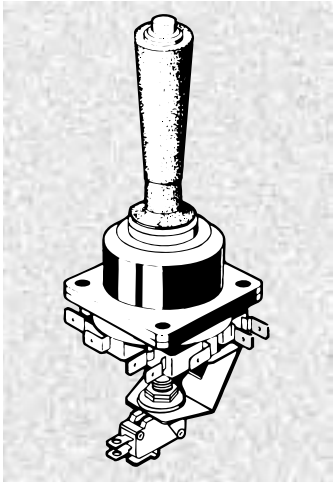

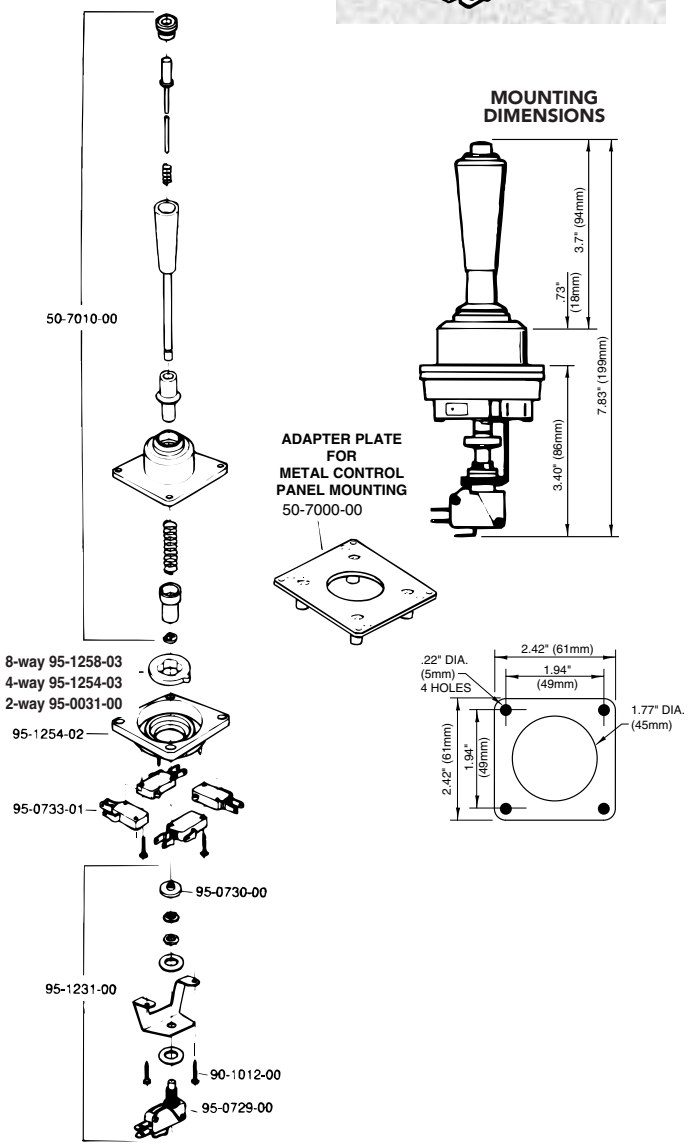

Part Number		Price per ea.	L/25
50-7008-00	8-way Microswitch Joystick w/Fire Button	31.35	29.00
50-7004-00	4-way Microswitch Joystick w/Fire Button	31.35	29.00
50-7002-00	2-way Microswitch Joystick w/Fire Button	44.00	40.60
50-7000-00	Adapter Plate for Metal Control Panel Mounting	3.70	3.40

TOP FIREBUTTON SUPER JOYSTICK

- Same rugged construction and smooth operation as Super Joystick
- Microswitch reliability tested to 10,000,000 cycles
- "Flare" style handle for comfortable grip
- Simple, direct, fire button switch action; uses standard microswitch
- Available in 4-way or 8-way
- .187" terminal Silver Contact Microswitch Standard
- Gold Contact Microswitch optional

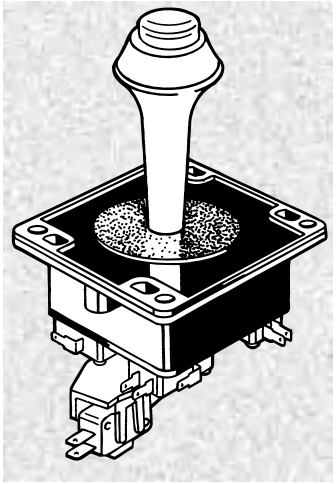

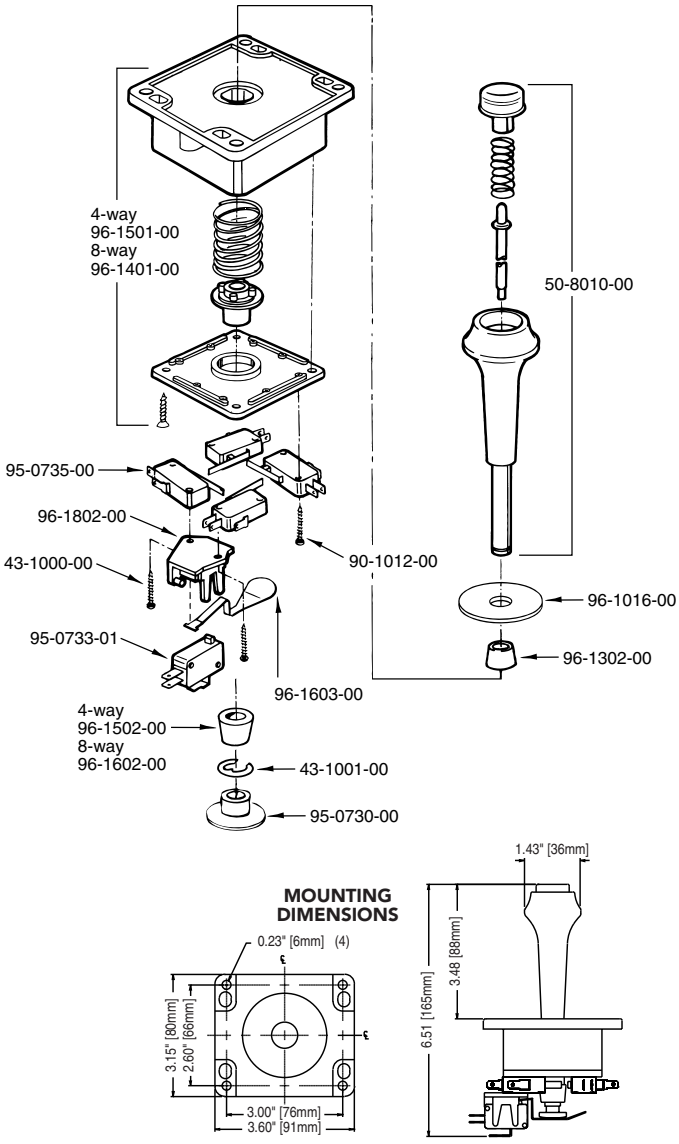

Part Number		Price per ea.	L/25
50-8000-10	8-way Top Firebutton Super Joystick	32.55	29.00
50-4000-10	4-way Top Firebutton Super Joystick	32.55	29.00

© HAPP CONTROLS

HEAVY DUTY 8-WAY TRIGGER JOYSTICK

- Comfortable and attractive, contoured ABS handle
- Rugged construction
- 3 Styles:
  – Trigger only
  – Trigger & single fire button
  – Trigger & 2 fire buttons
- Simple to install

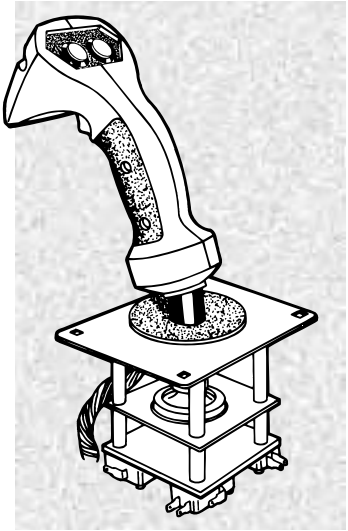

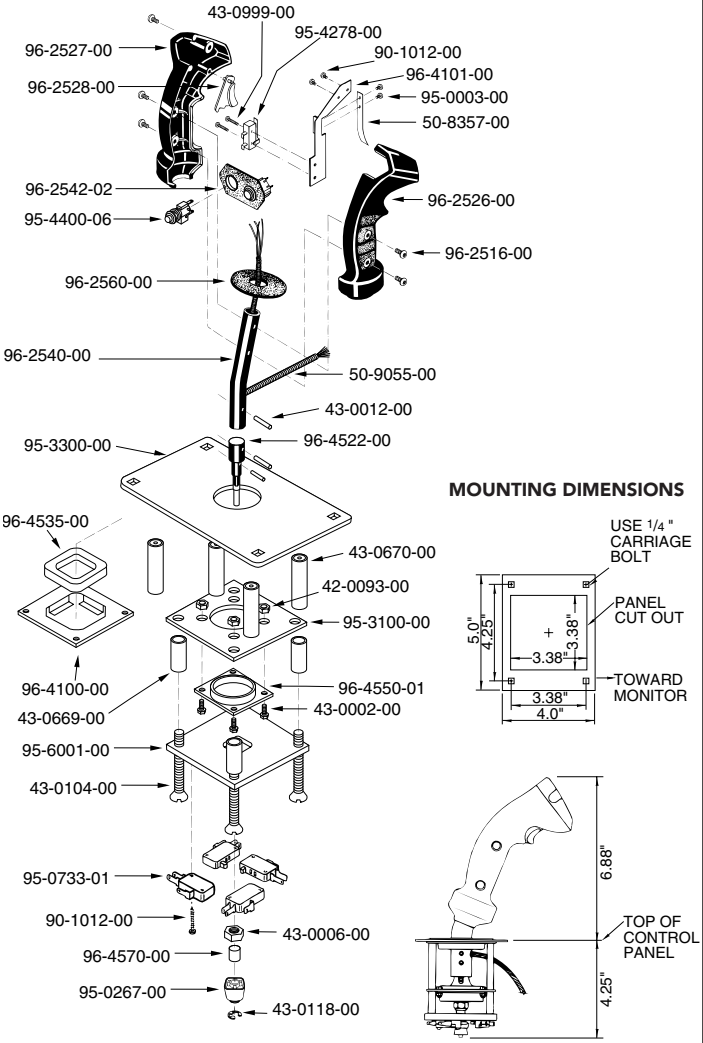

Part Number		Price per ea.	L/6
50-9970-00	H.D. Joystick, Trigger only	108.85	106.85
50-9980-00	H.D. Joystick, w/1 Fire Button	114.05	111.90
50-9975-00	H.D. Joystick, w/2 Fire Buttons	116.00	113.90

See page 314 for Torx® Security Wrench

HEAVY DUTY ANALOG TRIGGER JOYSTICK

- Rugged construction
- Comfortable contoured ABS handle
- 5k potentiometers fitted as standard
- Optional pot. amplifier PC board allows variable output from potentiometer
- This product is manufactured under a technology license agreement with **Atari Games Corporation®**
- Optional rubber boot available
- PC Version has 100k S Taper Potentiometers

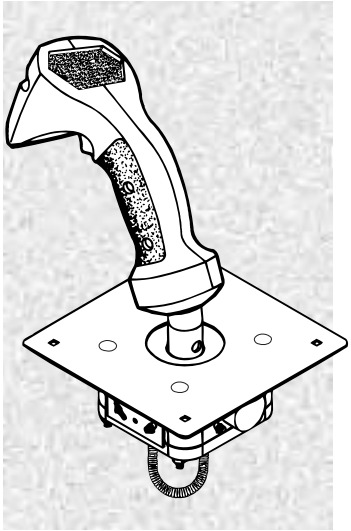

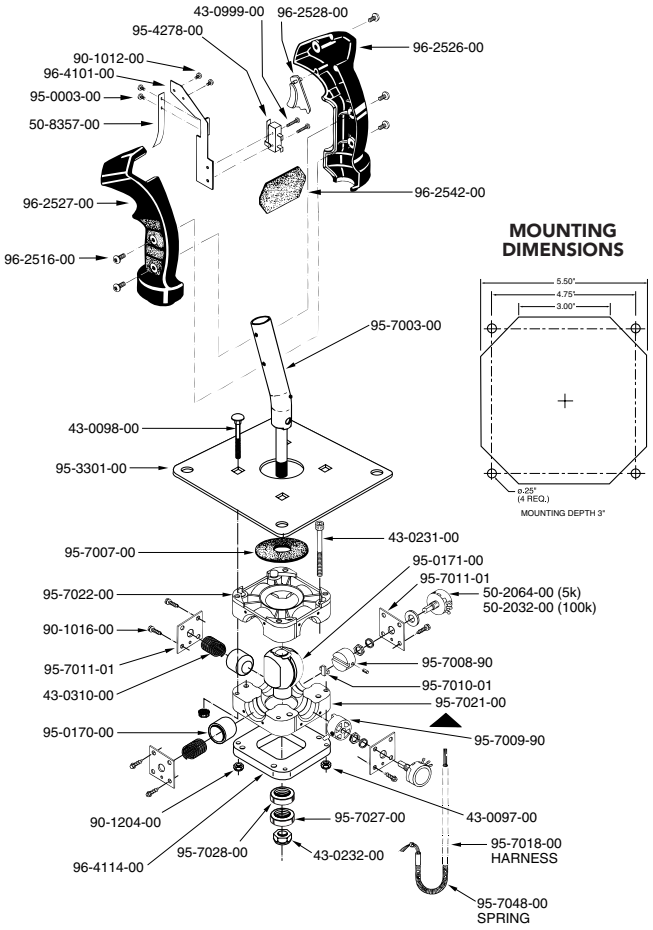

Part Number		Price per ea.	L/6
95-0701-00	Heavy Duty Analog Trigger Joystick with 5k Potentiometers	206.65	206.65
95-1346-00	Heavy Duty Analog Trigger Joystick with 5k Potentiometers and 2 thumb buttons, directly connects to UCGI	147.90	142.80
95-0393-00	PC Version, Analog Joystick with Heavy Duty Handle with 100k S Taper Potentiometers w/15-Pin Gameport Cable	220.50	220.50

See page 314 for Torx® Security Wrench

ANALOG JOYSTICK B-8 GRIP

- Rugged construction
- Authentic airplane flight stick (B-8)
- 8 functions on grip (4-way thumbswitch, 4 trigger switches)
- 5k potentiometers fitted as standard
- Optional pot. amplifier PC board allows variable output from potentiometer
- This product is manufactured under a technology license agreement with **Atari Games Corporation**®
- PC Version has 100k S Taper Potentiometers

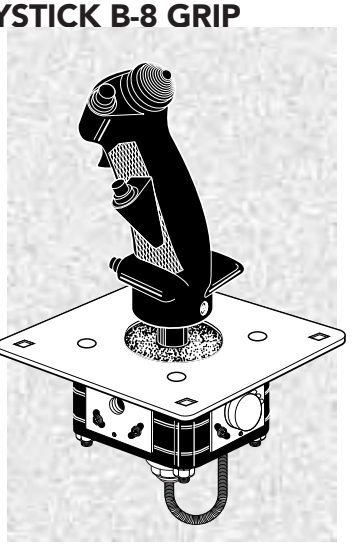

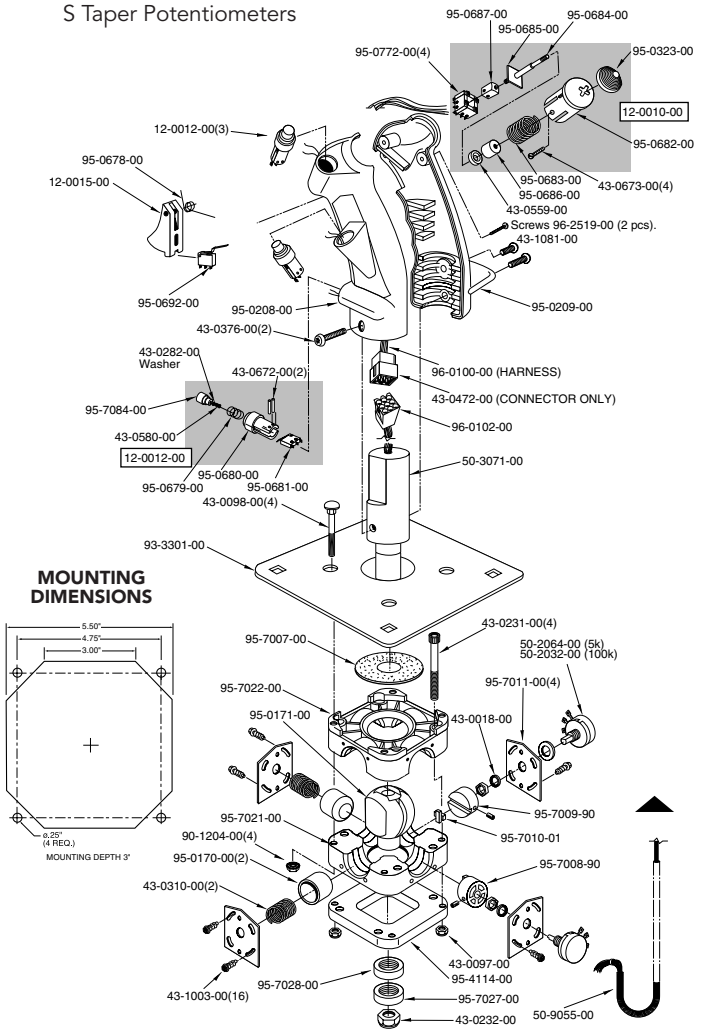

Part Number		Price per ea.	L/25
95-0251-00	Analog Joystick, B-8 Grip with 5k Potentiometers	283.45	259.80
95-1345-00	Analog Joystick, B-8 Grip with 5k Potentiometers, directly connects to UGCI 95-0800-20K	271.15	240.95
95-0394-00	PC Version, Analog Joystick, B-8 Grip 100k S Taper Potentiometers w/15-Pin Gameport Cable	296.35	272.25

ANALOG JOYSTICK WITH TRIGGER HANDLE

- Rugged construction
- 5k potentiometers fitted as standard (optical encoder version available)
- Microswitch reliability tested to 10,000,000 cycles
- Optional pot. amplifier PC board allows variable output from potentiometer
- This product is manufactured under a technology license agreement with **Atari Games Corporation**®
- PC Version has 100k S Taper Potentiometers

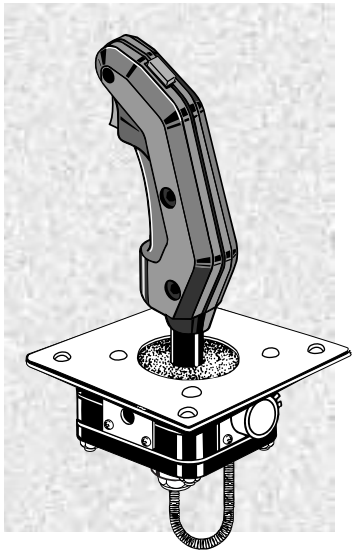

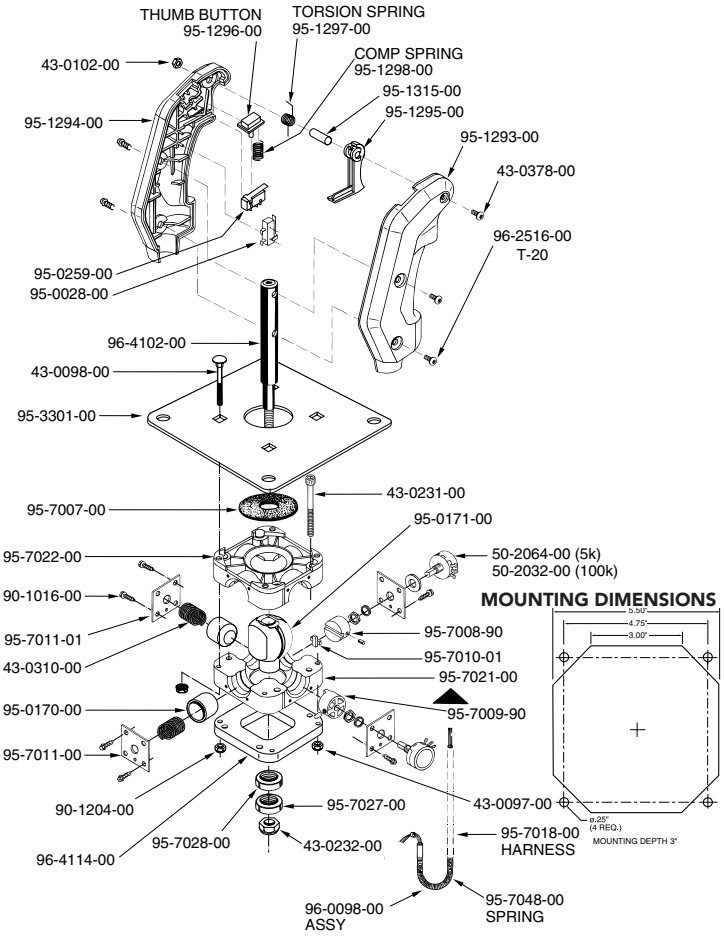

Part Number		Price per ea.	L/6
95-0179-00	Analog Joystick w/Trigger Handle with 5k Potentiometers	194.90	168.95
95-0392-00	PC Version, Analog Joystick with Trigger Handle with 100k S Taper Potentiometers w/15-Pin Gameport Cable	222.90	192.80

ANALOG JOYSTICK

- Rugged construction
- Positive return to center
- 5k potentionmeters fitted as standard
- Optional pot. amplifier PC board allows variable output from potentiometer
- This product is manufactured under a technology license agreement with **Atari Games Corporation®**
- PC version has 100k S Taper Potentiometers

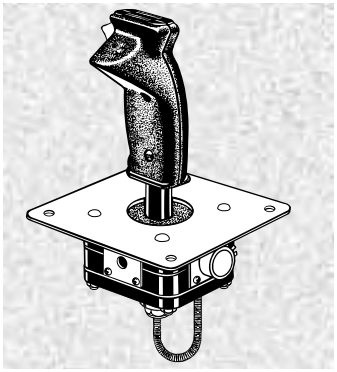

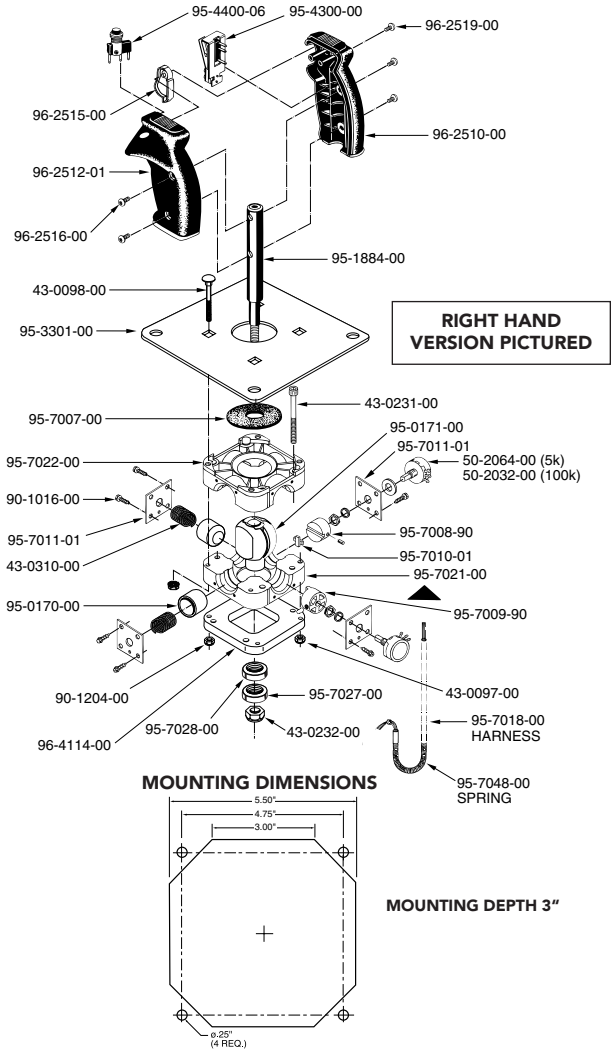

MOUNTING DIMENSIONS

MOUNTING DEPTH 3"

Part Number		Price per ea.	L/6
95-0172-00	Right hand Analog Joystick w/5k Potentiometers	180.75	156.70
95-1347-00	Right hand Analog Joystick w/5k Potentiometers, directly connects to UGCI 95-0800-20K	168.70	144.60
95-0173-00	Left hand Analog Joystick w/5k Potentiometers	177.20	153.60
95-0390-00	PC Version, Right Hand Analog Joystick with 100k S Taper Potentiometers with 15-Pin Gameport Cable	198.80	174.75
95-0391-00	PC Version, Left Hand Analog Joystick with 100k Potentiometers with15-Pin Cable	198.80	174.75

ANALOG JOYSTICK WITH TRIGGER GUARD HANDLE

- Rugged Construction
- Comfort grip with trigger guard
- Positive return to center
- 5k potentiometers fitted as standard
- Optional pot. amplifier PC board allows variable output from potentiometer
- This product is manufactured under a technology license agreement with **Atari Games Corporation®**
- PC version has 100k S Taper Potentiometers

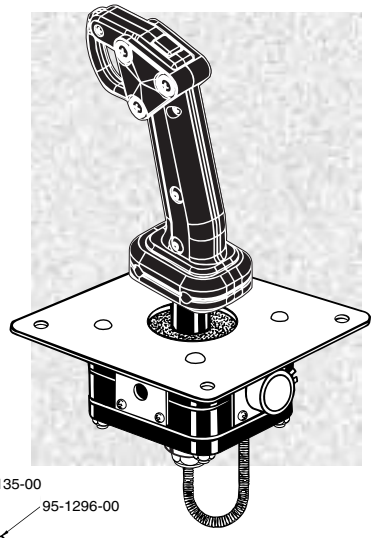

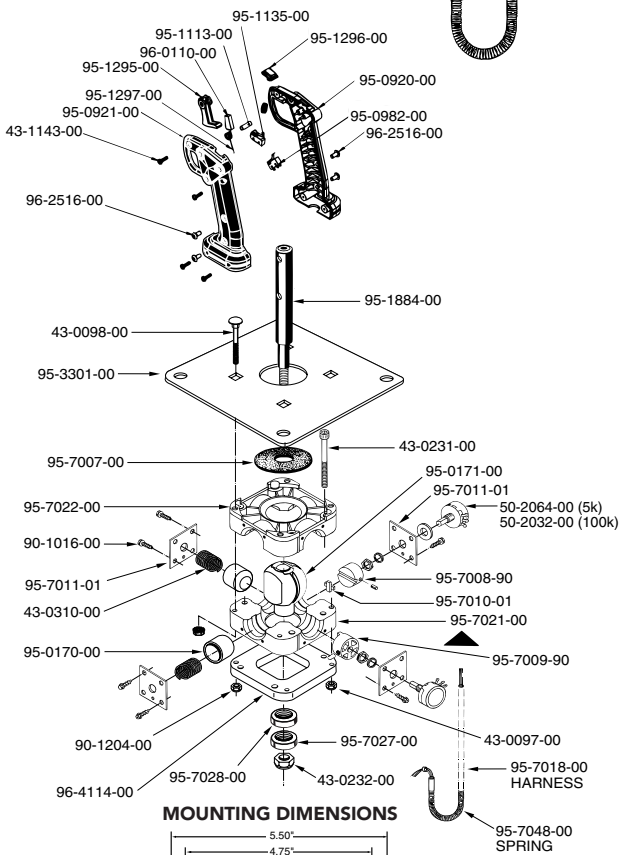

MOUNTING DIMENSIONS

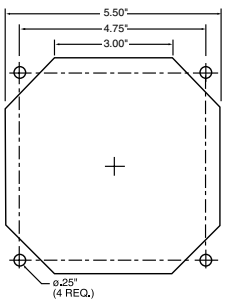

MOUNTING DEPTH 3"

Part Number		Price per ea.	L/6
95-0923-00R	Analog Joystick w/Trigger Guard w/5k Potentiometers	168.75	157.45
95-0394-10	PC Version, Analog Joystick with Trigger Guard with 100k S Taper Potentiometers with 15-Pin Gameport Cable	180.75	156.70

ANALOG JOYSTICK WITH ULTIMATE HANDLE

- Very smooth spring return to center
- 3/8" dia. steel shaft
- Rugged construction
- 5k potentiometers fitted as standard
- Optional pot. amplifier PC board allows variable output from potentiometer
- This product is manufactured under a technology license agreement with **Atari Games Corporation®**

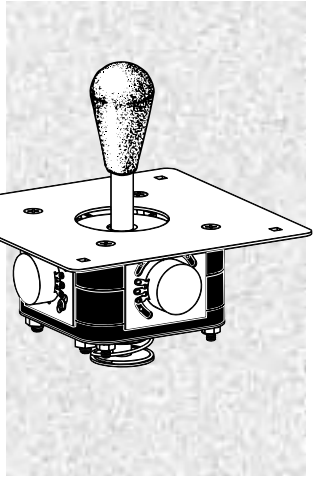

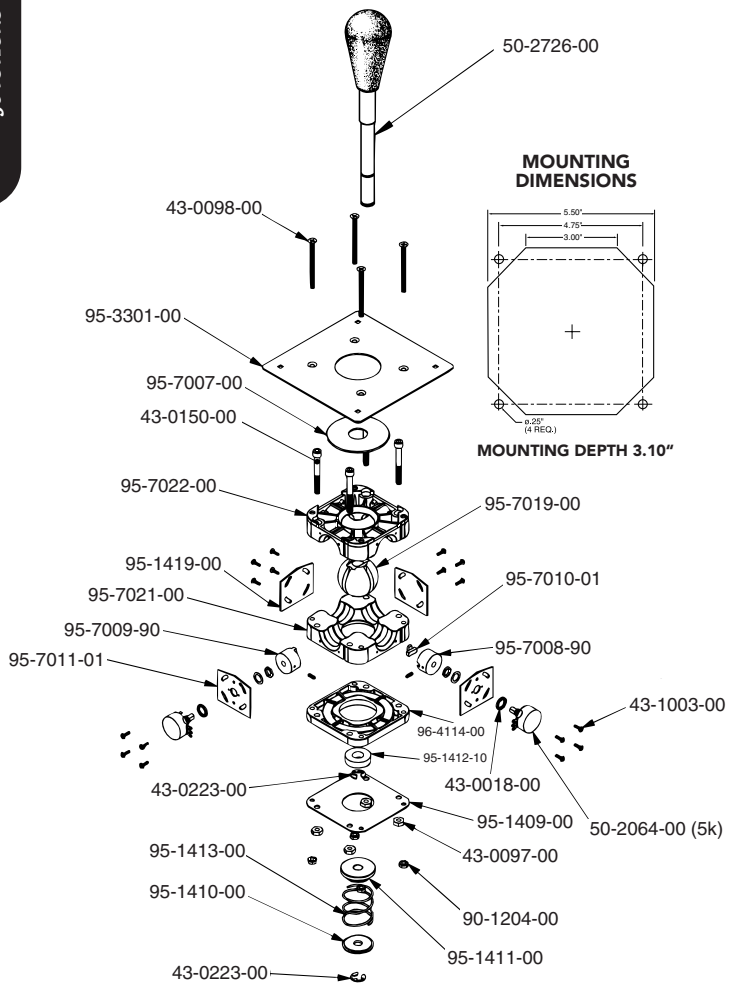

Part Number		Price per ea.	L/6
50-2876-00	Analog Joystick w/ Ultimate Handle w/ 5k Potentiometers	121.30	103.80

ANALOG JOYSTICK WITH STANDARD HANDLE

- Very smooth spring return to center
- Solid aluminum shaft with universal grip handle
- No buttons or triggers
- 5k potentiometers fitted as standard
- Optional pot. amplifier PC board allows variable output from potentiometer
- This product is manufactured under a technology license agreement with **Atari Games Corporation®**
- PC version has 100k S Taper Potentiometers

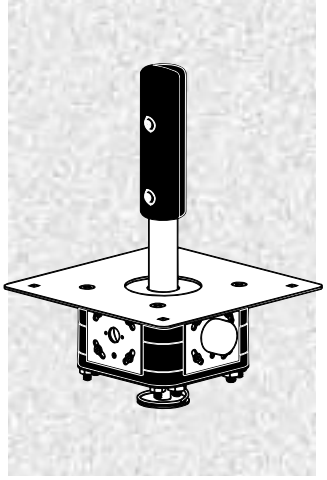

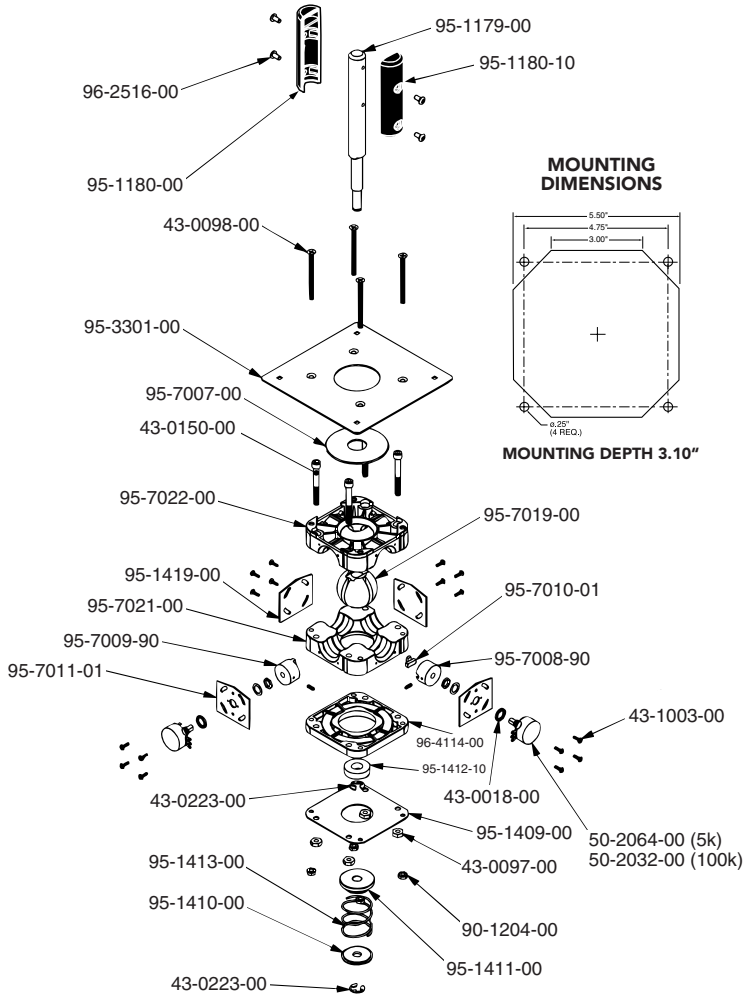

Part Number		Price per ea.	L/6
50-2740-00	Analog Joystick w/ Standard Handle w/ 5k Potentiometers	143.15	122.35
50-2741-00	PC Version, Analog Joystick w/ Standard Handle with100k S Taper Potentiometers with 15-Pin Gameport Cable	159.55	136.60

SUBMINIATURE JOYSTICK

- Rugged construction
- Compact yet gives you the feel of a full size joystick
- 2-way, 4-way or 8-way gated
- Spring return-to-center
- Quality Cherry switches
- Available with Molded Convex or Concave knob and steel shaft
- Rubber boot to help keep out dust and dirt
- Suitable for panel mounting

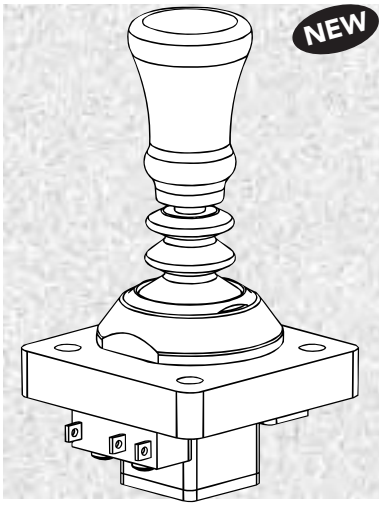

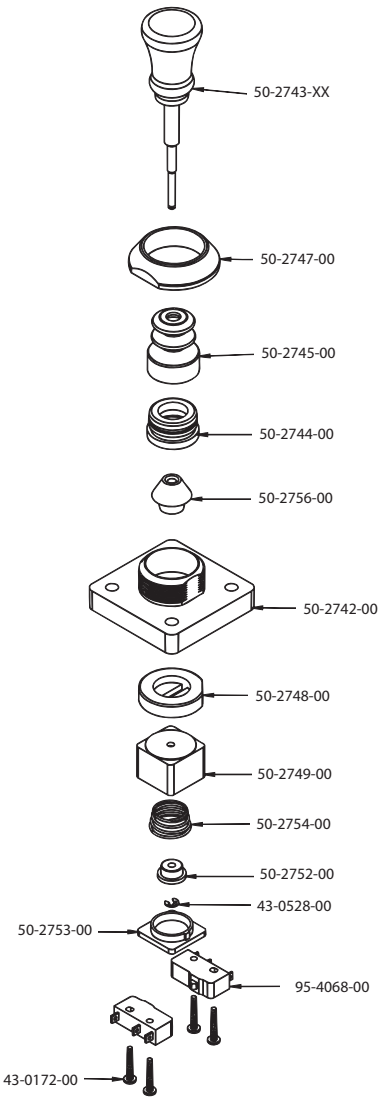

Part Number		Price per ea.
50-2755-00	2-Way Subminiature Joystick w/Convex Shaft	29.60
50-2755-10	2-Way Subminiature Joystick w/Concave Shaft	29.60
50-2757-00	4-Way Subminiature Joystick w/Convex Shaft	32.15
50-2757-10	4-Way Subminiature Joystick w/Concave Shaft	32.15
50-2760-00	8-Way Subminiature Joystick w/Convex Shaft	33.00
50-2760-10	8-Way Subminiature Joystick w/Concave Shaft	33.00

TRACKWHEEL CONTROL

- Replacement control for Arkinoid I and II video games
- With spinner knob

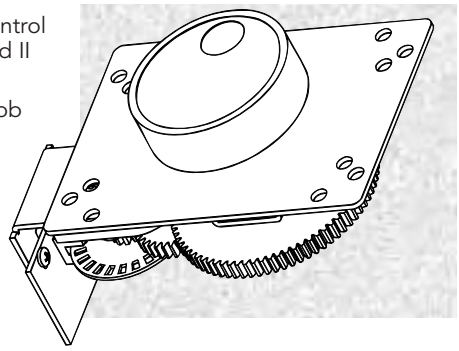

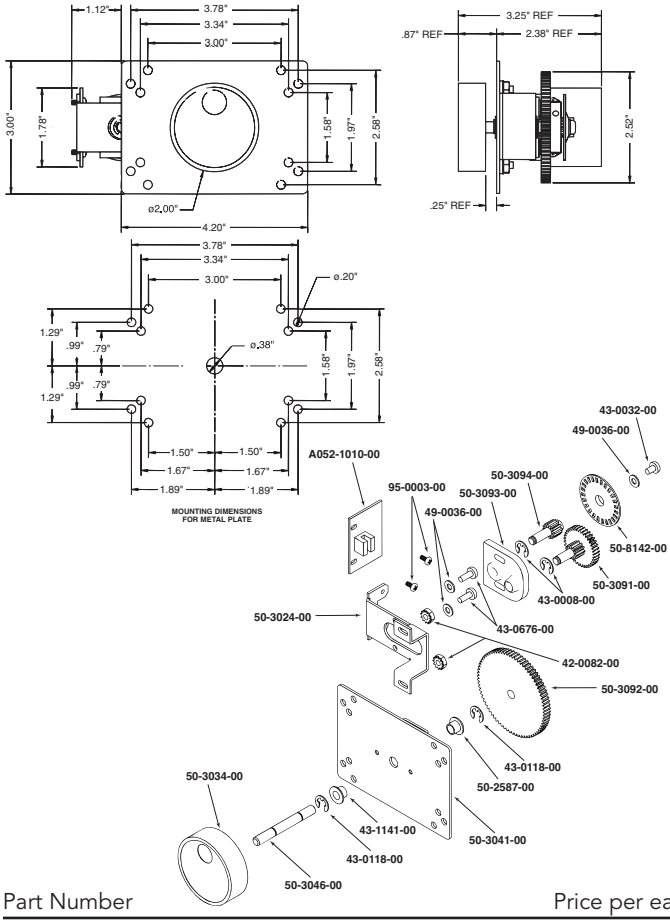

Part Number		Price per ea.
95-0931-00	Trackwheel Control	132.55

49-WAY JOYSTICK

- For Midway NBA Showtime, Blitz, Blitz 99 and Gauntlet games

MIDWAY

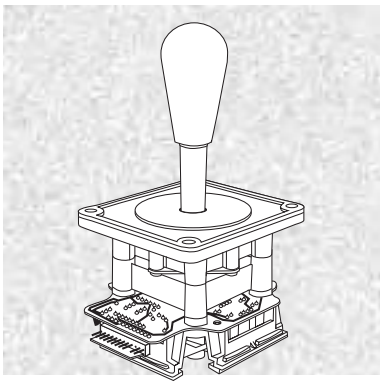

Part Number		Price per ea.
50-3100-00	49-Way Joystick	33.20
5490-10159-00	Replacement IC OPTO	1.20

GRIP ASSEMBLIES LEFT HAND & RIGHT HAND

- Fitted with microswitches in thumb and trigger switch
- Long life, 10,000,000 cycle rated

Replacement Parts For:

Bally: "Spyhunter II"
"Sarge"

Taito: "S.C. I."
"Battleshark"

Atari: "Stun Runner"
"Hydra"
"Road Riot"
"Steel Talons"
"Space Lords"

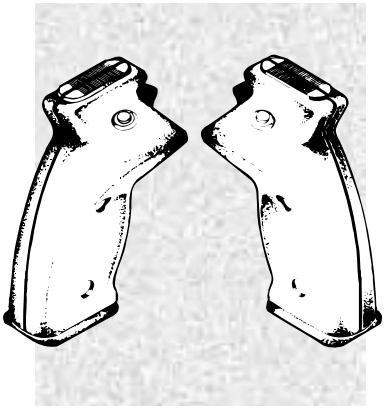

Part Number		Price per ea.
Left Hand Assemblies		
50-2508-00	LH Grip Assembly w/ Thumb Switch	23.60
50-2502-00	LH Grip Assembly w/o Thumb Switch	14.25
Right Hand Assemblies		
50-2507-00	RH Grip Assembly w/ Thumb Switch	23.60
50-2501-00	RH Grip Assembly w/o Thumb Switch	14.25

THUMB & TRIGGER SWITCH ASSEMBLIES

- With GOLD CHERRY Microswitch
- Thumb Switch Assembly fits 1/2" Ø panel hole up to 3/8" thick
- Thumb Switch Assembly replaces Cherry P163 and Licon switches on many applications
- Trigger Switch Assembly replaces original leaf switch and bracket on games listed above

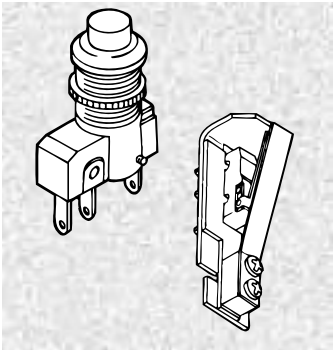

Part Number		Price per ea.
95-4300-00	Trigger Switch Assembly	9.70
95-4400-00	Thumb Switch Assembly (Red)	10.95
95-4400-06	Thumb Switch Assembly (Black)	10.95
96-2515-00	Trigger, red	3.15
96-2510-00	Outer grip, RH	6.10
96-2512-00	Inner grip, RH (undrilled)	6.10
96-2511-00	Outer grip, LH	6.10
96-2513-00	Inner grip, LH (undrilled)	6.10
96-2519-00	Screw, Outer to Inner for Grip (2 per)	.25
96-2516-00	Screw, Grip Assembly to Tube (4 per)	.48

TAMPER-RESISTANT TORX® WRENCHES

- A must for every toolbox
- Torx is a registered trademark of Camcar Div., Textron Inc.

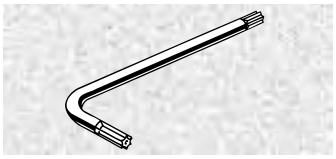

Part Number		Price per ea.	L/6
49-0452-00	Torx® T-10 Wrench	6.10	5.45
49-0107-00	Torx® T-15 Wrench	6.10	5.45
49-0049-00	Torx® T-20 Wrench	6.10	5.45
49-0048-00	Torx® T-25 Wrench	6.10	5.45
49-0520-00	Torx® T-27 Wrench	6.10	5.45
49-0537-00	Torx® T-30 Wrench	6.10	5.45
49-0538-00	Torx® T-40 Wrench	6.10	5.45

TAMPER-RESISTANT TORX® WRENCH SET

- 6-piece set
- Contains one each T-10, T-15, T20, T-25, T-27, T-30

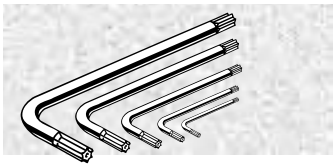

Part Number		Price per ea.
49-0709-00	Tamper-Resistant Torx® Wrench Set Torx is a registered trademark of Camcar Div., Textron Inc.	20.85

TAMPER-RESISTANT STAR BIT SET

- For tamper-proof star fasteners
- Tempered, precision-machined tips
- Includes 7 bits: T-10, T-15, T-20, T-25, T-27, T-30, T-40
- Complete with PVC organizer

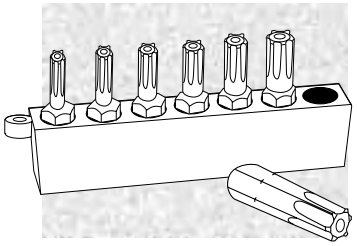

Part Number		Price per set
49-0710-00	Tamper-Resistant Star Bit Set	5.20

DO YOU WANT TO KNOW EACH TIME YOUR ORDER SHIPS OUT?

e-mail notification and order **tracking information** is now available from Happ Controls! Contact your sales representative or e-mail our customer service department at: **info@happcontrols.com** with your account information.

MAGNETIC SCREWDRIVER

- Industrial quality screwdriver
- Magnetic shank with flip top cap
- 1/4" Hex insert bit
- Includes 4 bits in handle - Phillips #1, #2 and Flat #4 , #6

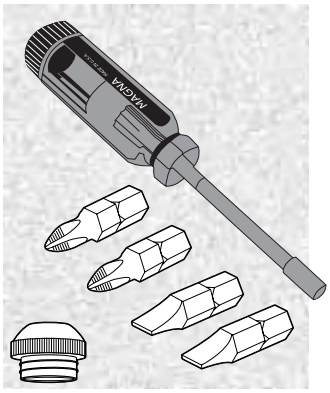

Part Number		Price per ea.
49-0585-00	7" Magnetic Screwdriver with 4 Bits	10.15
49-0586-00	11" Magnetic Screwdriver with 4 Bits	13.25
92-0035-00	Replacement Screw Cap	.99

SCREWDRIVER BITS

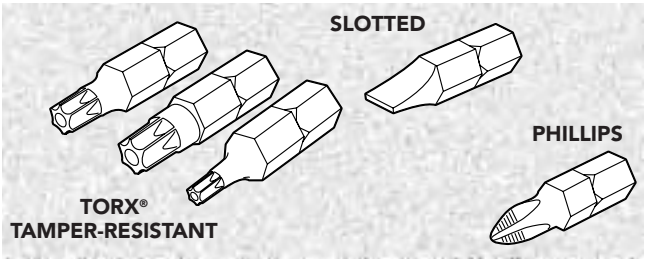

- Ideal for screw guns, cordless and electric drills
- Tough, fracture-resistant tips
- Made in the U.S.A.
- Torx is a registered trademark of Camcar Div., Textron Inc.

Part Number	Type	Price per ea.
92-0030-00	#0 Phillips	1.30
49-0632-00	#1 Phillips	1.30
49-0633-00	#2 Phillips	1.30
49-0634-00	#3 Phillips	1.30
49-0635-00	#3 - 4 Straight Slotted	2.50
49-0636-00	#5 - 6 Straight Slotted	1.55
49-0637-00	#6 - 8 Straight Slotted	1.55
49-0638-00	#8 - 10 Straight Slotted	1.55
49-0639-00	#10 - 12 Straight Slotted	1.55
49-0574-T10	Torx® T-10 Tamper Resistant Bit	2.50
49-0574-T15	Torx® T-15 Tamper Resistant Bit	2.50
49-0574-T20	Torx® T-20 Tamper Resistant Bit	2.50
49-0574-T25	Torx® T-25 Tamper Resistant Bit	2.50
49-0574-T27	Torx® T-27 Tamper Resistant Bit	2.50
49-0574-T30	Torx® T-30 Tamper Resistant Bit	2.50
49-0574-T40	Torx® T-40 Tamper Resistant Bit	2.50
92-0151-00	Torx® T-9 Bit	2.50
92-0264-00	Torx® T-20 Bit	2.50
92-0261-00	Torx® T-25 Bit	2.50

REPLACEMENT POTS FOR ANALOG JOYSTICKS

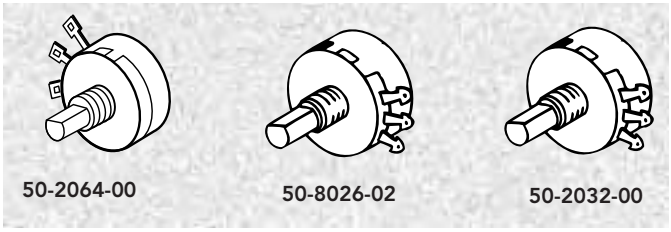

Part Number		Price per ea.
50-2064-00	5k S-Taper .750" Shaft	32.15
50-8026-02	5k Standard Taper .750" Shaft	11.00
50-2032-00	100k S-Taper .750" Shaft	25.70

SNAP SWITCHES

- High Cherry quality switch
- 75 gram (standard) actuating force
- .187" or .250" terminal available

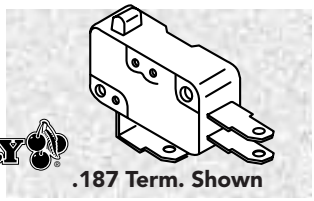

Part Number	Type	Terminals	Amps	Price per ea.	L/100
95-0733-01	D44	.187"	10	.91	.86
95-4114-00	D41	.187"	0.1	3.15	2.55

SNAP SWITCHES WITH STRAIGHT ACTUATORS

- 10 Amps
- 125 Volts
- .187 terminals

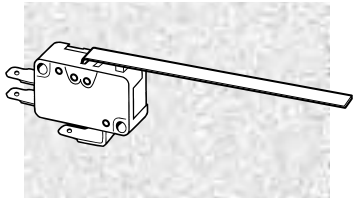

Mounting Dimensions 95-0735-00

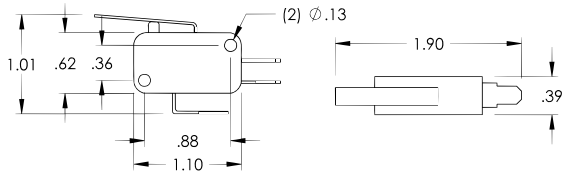

Part Number		Price per ea.
95-0735-00	1" Long Actuator	2.85

Visit Our Web Site:
happcontrols.com
for NEW Product Updates!!

USB GAME CONTROL INTERFACE (UGCI)

Universal Serial Bus (USB) Control Interface Board **UCIB**™ allows Personal computers equipped with USB to easily interface with standard "Arcade Quality" controls from Happ Controls via the USB Port. The device will be automatically configured as soon as it is physically attached, without the need to reboot or run Setup. No drivers necessary to install, only requires a Windows 95/98/ME/2000™/XP CD.

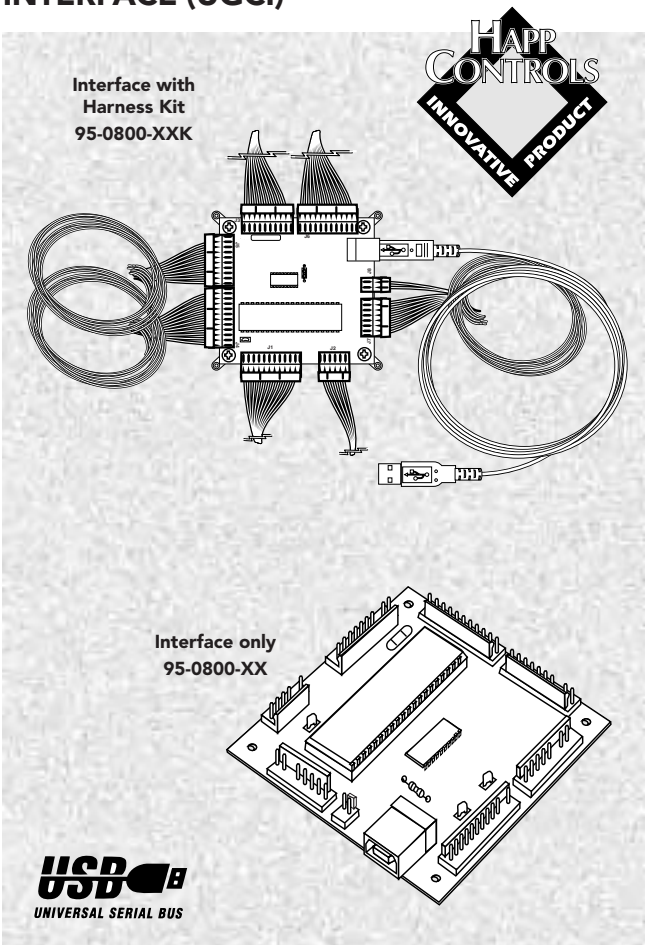

Benefits of utilization of the USB intelligent interface:

- Hot Swapping Capability
- Multiple Peripheral, with use of USB hubs, allows up to 127 different peripherals to be used at one time
- Moves Data at a High Speed
- No separate power supply needed
- Share Peripherals between PC platforms
- Higher Bandwidth than Serial
- Simplicity of use
- Established base of millions of USB computers
- Built-in operating system support for devices

Features of Happ Controls Universal Serial Bus (USB) Game Control Interface Board (UGCI)

- High Performance Universal Serial Bus (USB) IO Channel
- Low cost
- Robust fault tolerant design which is USB HID compliant
- DirectX ready
- WINDOWS 95/98/ME/2K/XP Operating System Ready
- OAAF Compliant
- Seven high speed 8-bit 20 Khz analog channels
- 32 Digital inputs at 10 Khz each
- CPU resource efficient 10 times faster than RS-232 based arcade models
- Supports games running at 120 FPS
- 1.5 Mbytes/Second, 1000 Hz polling frequency for each data packet.
- Plug-And-Play and ACPI Compliant
- Up to two Coin/Bill Counters
- Host CPU Reset watchdog timer
- Mappable keyboard buttons with SDK available online
- 3 Models available to best fit application
- Daughter board available for high current outputs, 96-0746-00
- Supports both trackball and buttons
- Small compact size 3" x 3"
- NOTE: To use the Coin/Bill counters, Watchdog and Player Start buttons require application software to be written for the UGCI. You need to be a member of MSDN (Microsoft Developers Network) and use the MSDN DDK to do this.
- The UGCI is not compatible with MAC OS.

Part Number		Price per ea.	L/25
95-0800-XXK	USB Game Control Interface (UGCI) With Harness Kit, USB Cable and PCB Mounting Feet (Specify Model)	185.20	174.80
95-0800-XX	USB Game Control Interface Only w/o harnesses (Specify Model)	167.85	157.40
96-0735-00	USB Cable 5' Type A to B	10.40	9.25

Models available:
XX = Model Type
10 = Driving
20 = Flying
30 = Fighting

Models available:(Controls Sold Separately)

Driving USB (95-0800-10) Supports:

- Steering wheel
- Brake
- Throttle
- 2 Coin/Bill-Counters
- Up to Six Buttons
- Trackball with 3 buttons
- 4-Speed Shifter with Reverse
- 2 Start Buttons
- Host Watchdog Timer

Flying USB (95-0800-20) Supports:

- Analog B-8 Style Joystick, with POV hat
- Rudder Pedal
- Throttle
- Trackball with 3 buttons
- 2 Coin/Bill-Counters
- 2 Start Buttons
- Host Watchdog Timer
- 4 Select Buttons

Fighting USB (95-0800-30) Supports:

- Two Eight Position Digital Joysticks
- Six Buttons for each Joystick (seven for JS1)
- Trackball with 3 Buttons
- 2 Coin/Bill Counters
- Host Watchdog Timer
- 4 Select Buttons
- 2 Start Buttons

USB
UNIVERSAL SERIAL BUS

© HAPP CONTROLS

1-1/2" DIAMETER TRACKBALL

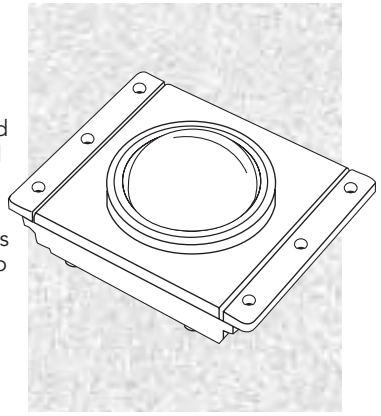

- Provides a big ball feel in a small package
- Combination of precision stainless steel components, high-grade injection molded plastics and superior optical encoders to create a high quality compact trackball
- Trackball orientation settings can be changed with the flip of a dipswitch
- Button & USB harness sold separately
- Optional translucent backlit ball option
- Optional mounting kit available (55-0306-00) see page 322

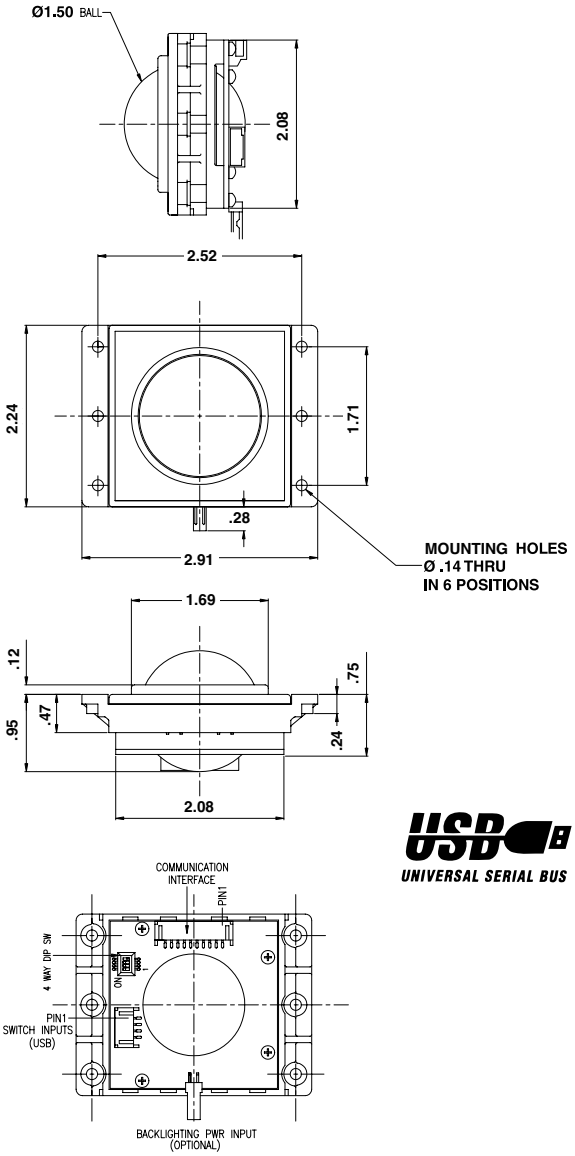

Part Number		Price per ea.
56-0200-16USB	1-1/2" Trackball, Black, USB Interface	131.95
55-0274-00	USB Cable for 1-1/2" Trackball, 6' long	41.55
55-0276-00	2 Button Harness for 1-1/2" Trackball, 12.5" long	6.60

2-1/4" DIAMETER TRACKBALL

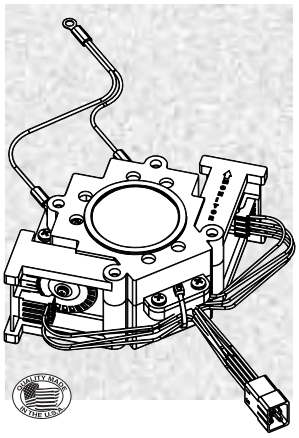

- **Made in USA**
- Durable black polycarbonate plastic material
- 2-1/4" diameter ball (standard color white)
- Standard AMOA harness included
- Custom colors available
- Mounting hardware sold separately
- Mounting kits available for wood or metal see page 322
- Can be used as a heavy duty alternative to a mouse for interactive displays when used in conjunction with Trackball Interface Kit
- Translucent, illuminated ball optional

Looking for Trackball Interface Kits? see page 323

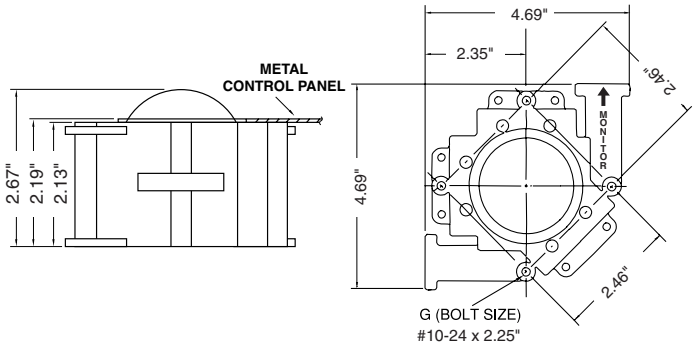

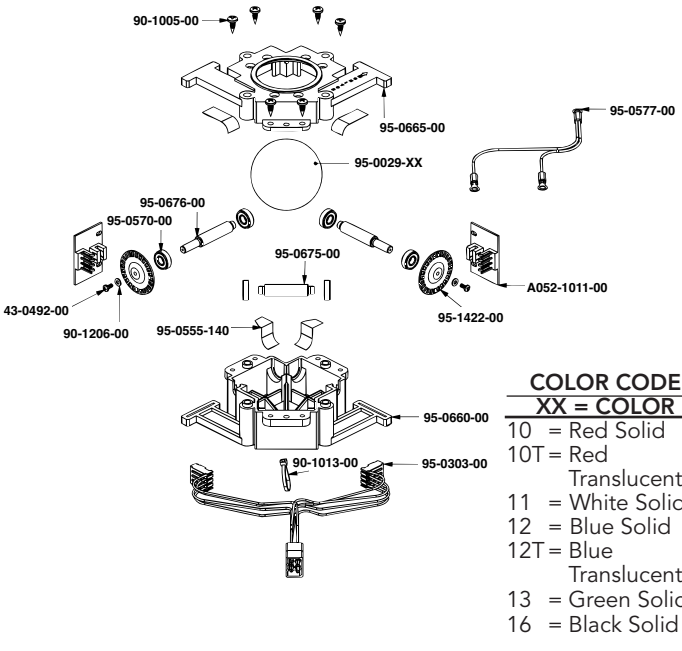

COLOR CODE
XX = COLOR

10 = Red Solid
10T = Red Translucent
11 = White Solid
12 = Blue Solid
12T = Blue Translucent
13 = Green Solid
16 = Black Solid

Trackball (Specify Color)

Part Number		Price per ea.	L/6
56-5500-XX	2-1/4" Diameter Trackball with Harness	90.40	84.45

3" DIAMETER WHITE HIGH LIP TRACKBALL FOR USE IN GOLDEN TEE® FORE 2002 - 2004 AND PGA TOUR GOLF

- Updated case design with high lip around trackball for use on new updated control panel design on newer Golden Tee® Fore 2003 - 2004 games.
- Includes a spacer bracket to allow this trackball to be used in Golden Tee® and Golden Tee® Fore 2002
- Highly specialized components provide the ultimate performance trackball for use with Golden Tee® Fore and PGA Tour machines
- Exceptional performance and precision is achieved from hardened steel shafts
- Optimized for all types of shots and skill levels of the most critical players
- Consistent manufacturing process provides a trackball with performance you can depend on
- Tested and preferred by elite "Gold Division" Golden Tee® Fore players
- Durability to last and maintain superior performance
- Case is constructed of durable impact resistant polycarbonate plastic material that resists cracking due to impact
- Powerful optics work even under dirty and dusty conditions
- "Red Board" PCB has improved circuitry to guarantee an optimized performance signal both at low and high rpm speeds
- Optic board utilizes surface mount technology and superior optics for increased reliability
- Standard AMOA harness included
- Note: If you have an earlier version of PGA Tour with a PS/2 configuration replace with part number 56-0400-11
- Includes label: "Happ Controls Trackball Installed"
- **Proudly Made in USA**

3" TRACKBALL MOUNTING DIMENSIONS

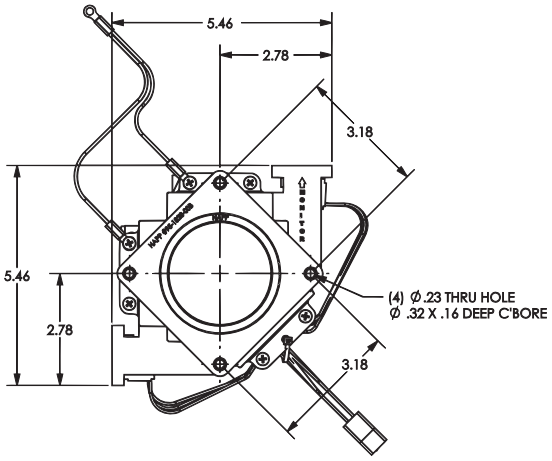

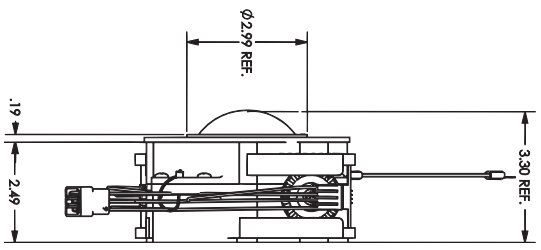

Part Number		Price per ea.	L/6
56-0100-11HL	3" Diameter White High Lip Trackball with Harness	94.50	88.60

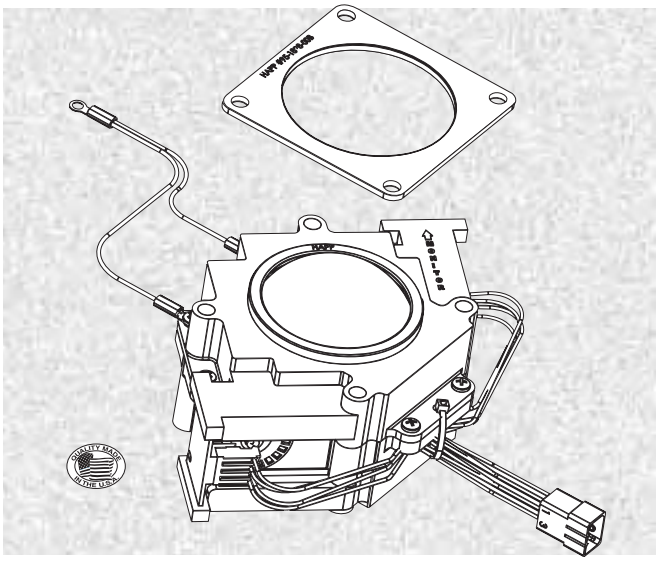

Looking for Trackball Interface Kits? see page 323

HAPP CONTROLS
TRACKBALL INSTALLED
TESTED AND PREFERRED BY THE ELITE PLAYERS

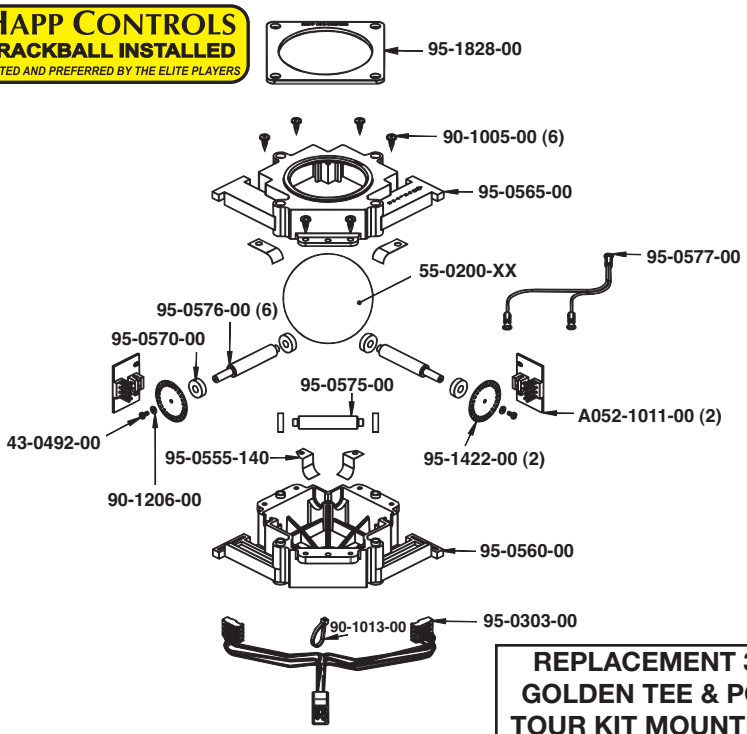

Translucent illumination parts optional

REPLACEMENT 3" GOLDEN TEE & PGA TOUR KIT MOUNTING PLATE

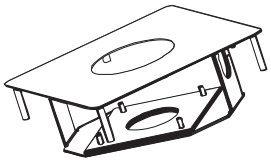

55-0321-00

SEE PAGE 338 FOR GOLDEN TEE® CONTROL PANEL (900242100)

3" DIAMETER TRACKBALL

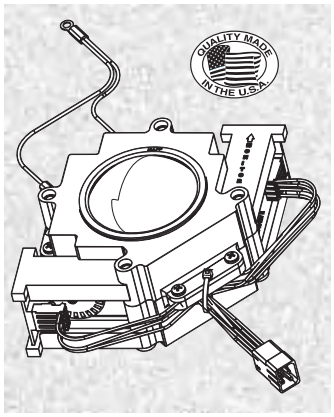

- **Made in USA**
- Durable black polycarbonate plastic material
- 3" diameter ball
- Custom colors available
- Standard AMOA harness included
- Mounting hardware sold separately
- Mounting kits available for wood or metal see page 322
- Can be used as a heavy duty alternative to a mouse for interactive displays when used in conjunction with trackball interface kit
- Translucent, illuminated ball optional

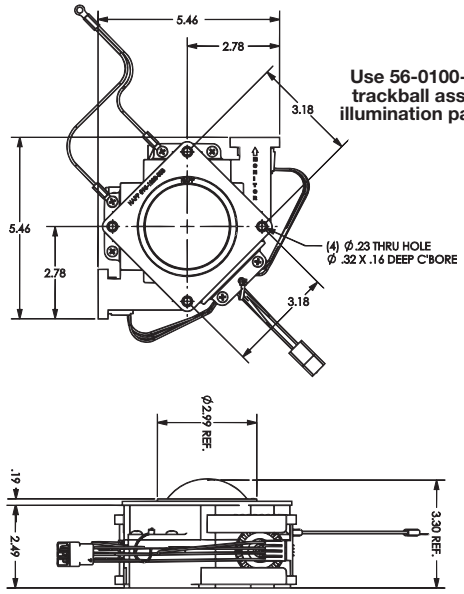

Use 56-0100-XXTIXX for trackball assembly with illumination parts installed

See previous page for exploded view.

Part Number		Price per ea.	L/6
56-0100-10	3" Dia. Trackball w/ Harness, Red Solid	96.40	90.40
56-0100-10TI6	3" Dia. Trackball w/ Harness, Red Translucent with 6V Lamp	98.85	92.80
56-0100-10TI12	3" Dia. Trackball w/ Harness, Red Translucent with 12V Lamp	98.85	92.80
56-0100-11HL	3" Dia. Trackball w/ Harness, White Solid	94.50	88.60
56-0100-12	3" Dia. Trackball w/ Harness, Blue Solid	96.40	90.40
56-0100-12TI6	3" Dia. Trackball w/ Harness, Blue Translucent with 6V Lamp	98.85	92.80
56-0100-12TI12	3" Dia. Trackball w/ Harness, Blue Translucent with 12V Lamp	98.85	92.80
56-0100-13	3" Dia. Trackball w/ Harness, Green Solid	94.50	88.60
56-0100-13TI6H	3" Dia. Trackball w/ Harness, Green Translucent with 6V Lamp	107.00	100.40
56-0100-13TI12	3" Dia. Trackball w/ Harness, Green Translucent with 12V Lamp	98.85	92.80
56-0100-15TI12	3" Dia. Trackball w/ Harness, Yellow Translucent with 12V Lamp	98.85	92.80
56-0100-16	3" Dia. Trackball w/ Harness, Black Solid	96.40	90.40

3" DIAMETER HIGH BALL TRACKBALL

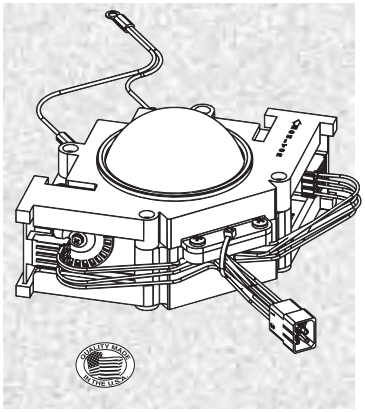

- **Made in USA**
- New case design allows ball to sit higher within control panel
- More hand contact and better play with high ball
- Durable black polycarbonate plastic material
- 3" diameter ball
- Custom colors available
- Standard AMOA harness included
- Mounting hardware sold separately
- Mounting kits available for wood or metal see page 322
- Can be used as a heavy duty alternative to a mouse for interactive displays when used in conjunction with trackball interface kit
- Translucent, illuminated ball optional

Looking for Trackball Interface Kits? see page 323

COLOR CODE

XX = COLOR

10 = Red Solid
10T = Red Translucent
11 = White Solid
12 = Blue Solid
12T = Blue Translucent
13 = Green Solid
13T = Green Translucent
16 = Black Solid

3" HIGHBALL TRACKBALL MOUNTING DIMENSIONS

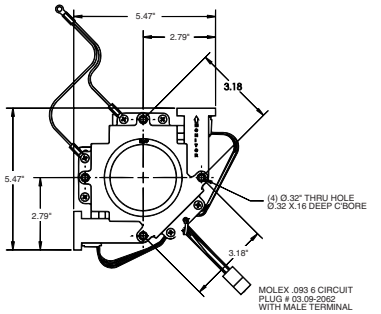

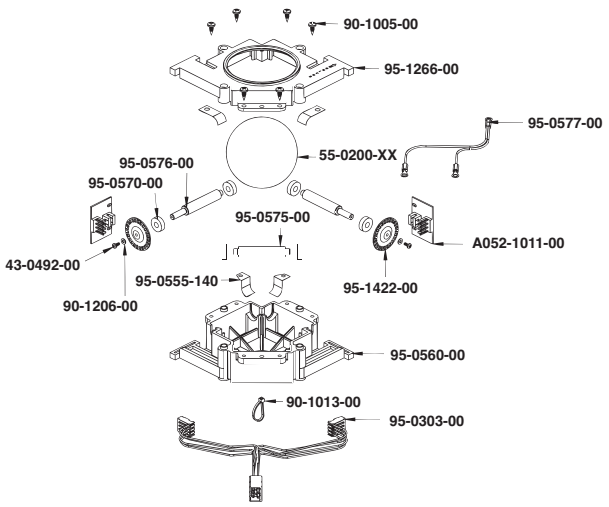

Trackball (Specify Color)

Part Number		Price per ea.	L/6
56-0110-XX	3" Diameter High Ball Trackball with Harness	102.50	90.40

2-1/4" TRACKBALL WITH USB & PS/2 INTERFACE

Features

The Happ Controls 2-1/4" Trackball & USB and PS/2 interface allows personal computers to easily interface with the standard "Arcade Quality" trackball and pushbuttons from Happ Controls via either the USB port or PS/2 connecter without the use of any external power supply. This allows the user to replace the existing mouse with a Happ Controls heavy-duty trackball for public access and similar applications. The USB & PS/2 trackball can be added with or without removing the original mouse. The device will be automatically configured as soon as it is physically plugged into the USB port or hub, without the need to reboot or run Setup.

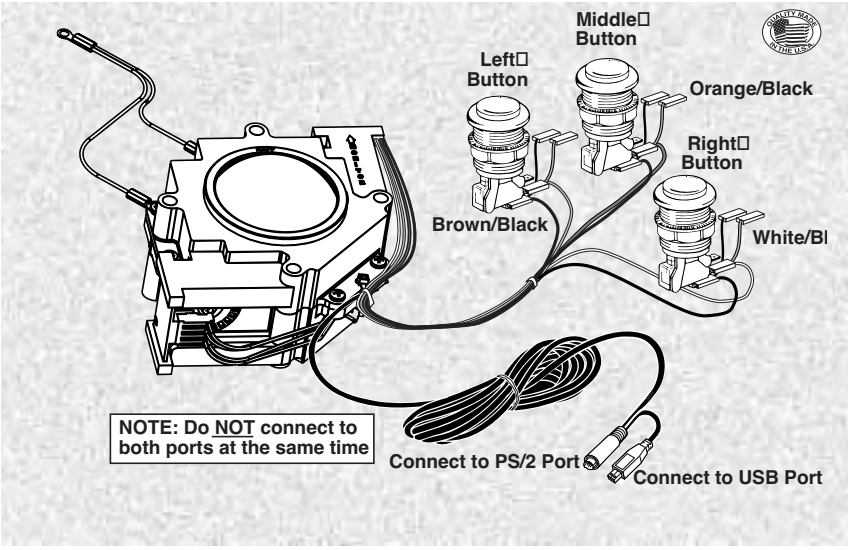

- Trackball has durable black polycarbonate plastic material
- 2-1/4" diameter ball (standard color white)
- Exceptional performance and precision is achieved from harden steel shafts
- Custom colors available
- No interface needed to connect the Happ Controls trackball to a PC
- Connects directly to either a PS/2 (mouse) port or a USB port on a PC
- Compatible with Windows 98™, Windows 2000™, Windows ME™ and Apple Macintosh iMac™, Power PC™ with OS 8.5 or higher, Linux with USB HID support
- No external power supply needed
- Automatically detects whether it is connected to a PS/2 or a USB port and configures itself accordingly
- Comes with a 6-foot cable that plugs into a USB or a PS/2 port
- Supports up to three buttons. (Three-button functionality will require the use of a driver that supports three buttons. The standard MS driver supports only two, and the MAC OS supports only one).
- A wire harness is included which will connect to the Happ Controls Horizontal, Ultimate, Competition or Illuminated pushbuttons
- Includes both .187" and 250" terminal connectors for pushbuttons
- Pushbuttons and mounting plate kits are sold separately
- **Made in USA**
- The trackball is manufactured under a technology license agreement with **Atari Games Corporation**

Button Wire Color Code
Left Button – Brown & Black wire
Middle Button - Orange & Black wire
Right Button - White & Black wire

Benefits of USB

- Hot Swapping Capability
- Multiple Peripheral, with the use of USB hubs, allows up to 127 different peripherals to be used at one time
- Moves Data at a High Speed
- Distributes electrical power to many peripherals. USB lets the PC automatically sense the power that's required and deliver it to the device. This feature eliminates the need for auxiliary power supplies
- Share Peripherals between PC Platforms
- Higher bandwidth
- Simplicity of use
- Built-in operating system support for devices

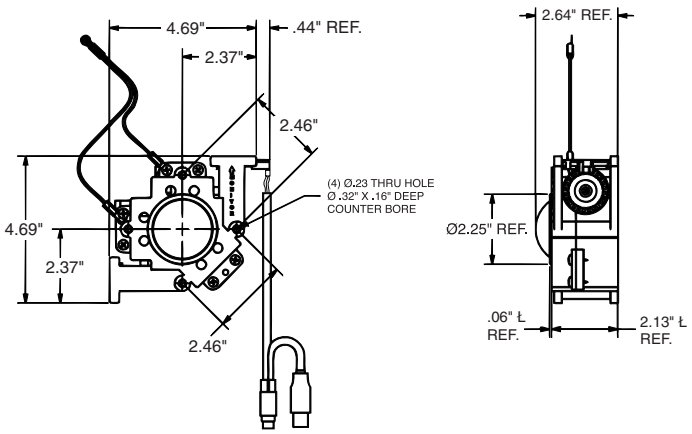

Part Number		Price per ea.
56-5600-10	2-1/4" Trackball with USB and PS/2 Interface, Red Solid	147.65
56-5600-11	2-1/4" Trackball with USB and PS/2 Interface, White Solid	147.65
56-5600-12	2-1/4" Trackball with USB and PS/2 Interface, Blue Solid	147.65
56-5600-16	2-1/4" Trackball with USB and PS/2 Interface, Black Solid	147.65
55-0203-00	2-1/4" Trackball Mounting Plate Kit, Painted Black	11.00

3" TRACKBALL WITH USB & PS/2 INTERFACE

Features

The Happ Controls 3" Trackball & USB and PS/2 interface allows personal computers to easily interface with the standard "Arcade Quality" trackball and pushbuttons from Happ Controls via either the USB port or PS/2 connecter without the use of any external power supply. This allows the user to replace the existing mouse with a Happ Controls heavy-duty trackball for public access and similar applications. The USB & PS/2 trackball can be added with or without removing the original mouse. The device will be automatically configured as soon as it is physically plugged into the USB port or hub, without the need to reboot or run Setup.

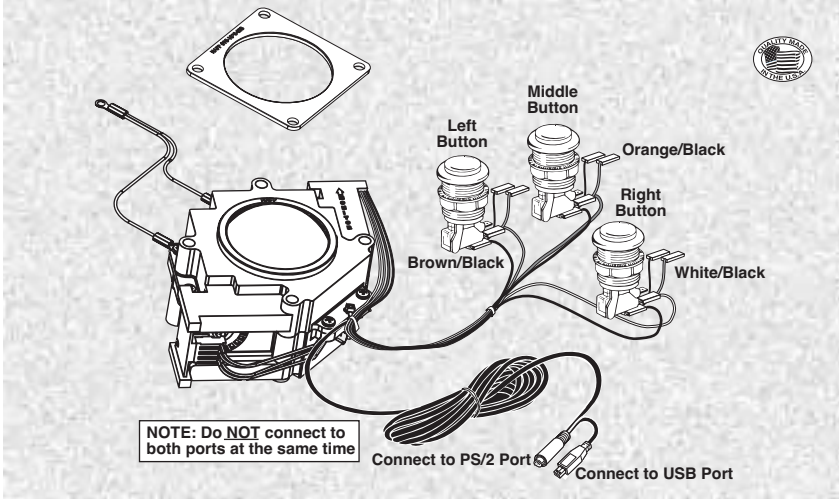

- Trackball has durable black polycarbonate plastic material
- 3" diameter ball (standard color white)
- Exceptional performance and precision is achieved from harden steel shafts
- Custom colors available
- Translucent, illuminated ball optional (requires external 12vdc power source)
- No interface needed to connect the Happ Controls trackball to a PC
- Connects directly to either a PS/2 (mouse) port or a USB port on a PC
- Compatible with Windows 98™, Windows 2000™, Windows ME™ and Apple Macintosh iMac™, Power PC™ with OS 8.5 or higher, Linux with USB HID support
- No external power supply needed
- Automatically detects whether it is connected to a PS/2 or a USB port and configures itself accordingly
- Comes with a 6-foot cable that plugs into a USB or a PS/2 port
- Supports up to three buttons. (Three-button functionality will require the use of a driver that supports three buttons. The standard MS driver supports only two, and the MAC OS supports only one).
- A wire harness is included which will connect to the Happ Controls Horizontal, Ultimate, Competition or Illuminated pushbuttons
- Includes both .187" and .250" terminal connectors for pushbuttons
- Pushbuttons and mounting plate kits are sold separately
- **Made in USA**

Button Wire Color Code

Left Button – Brown & Black wire
Middle Button - Orange & Black wire
Right Button - White & Black wire

Benefits of USB USB UNIVERSAL SERIAL BUS

- Hot Swapping Capability
- Multiple Peripheral, with the use of USB hubs, allows up to 127 different peripherals to be used at one time
- Moves Data at a High Speed
- Distributes electrical power to many peripherals. USB lets the PC automatically sense the power that's required and deliver it to the device. This feature eliminates the need for auxiliary power supplies
- Share Peripherals between PC Platforms
- Higher bandwidth
- Simplicity of use
- Built-in operating system support for devices

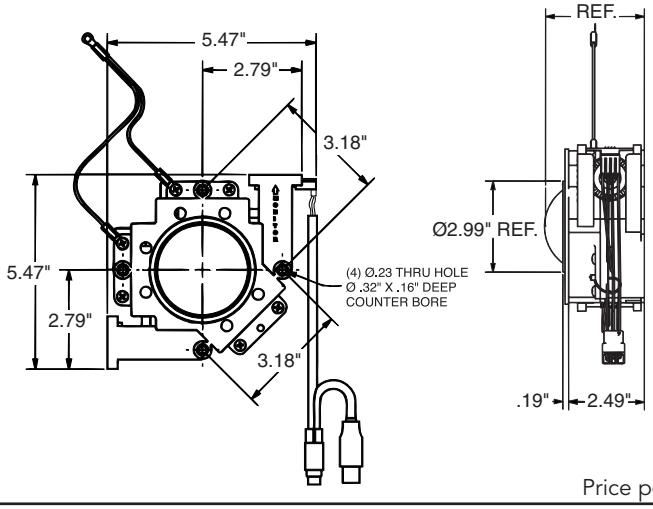

Part Number		Price per ea.
56-0300-10	3" Trackball with USB and PS/2 Interface Red	153.60
56-0300-10T	3" Trackball with USB and PS/2 Interface Red Translucent	157.85
56-0300-11	3" Trackball with USB and PS/2 Interface White	153.60
56-0300-12	3" Trackball with USB and PS/2 Interface Blue	153.60
56-0300-12T	3" Trackball with USB and PS/2 Interface Blue Translucent	157.85
56-0300-16	3" Trackball with USB and PS/2 Interface Black Solid	153.60
55-1101-00	3" Trackball Mounting Plate Kit, Painted Black	11.00
55-1102-00	3" Trackball Mounting Plate Kit, Painted Clear	9.80

4-1/2" TRACKBALL WITH USB AND PS/2 INTERFACE

- **Made in U.S.A.**
- Exceptional performance and precision
- Durable steel construction
- Allows a new dimension of play with this large trackball
- Custom color balls available
- Mounting hardware sold separately
- Ball sold separately
- USB-PS/2 version 55-0314-00

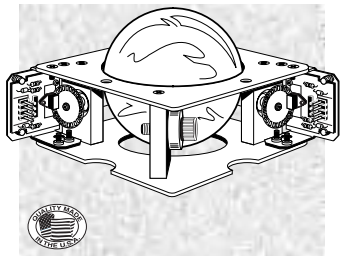

USB UNIVERSAL SERIAL BUS

4-1/2" TRACKBALL MOUNTING DIMENSIONS

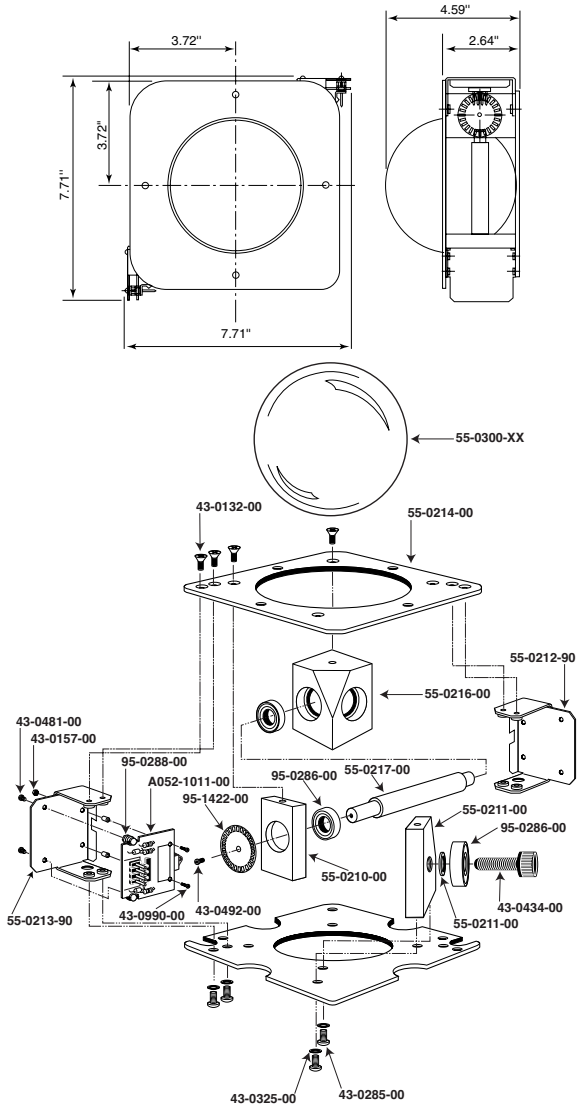

Part Number		Price per ea.	L/6
55-0226-00	4-1/2" Trackball, W/O Ball	150.60	144.60
55-0314-00	4-1/2" Trackball, USB/PS/2, W/O ball	188.35	181.05
55-0300-00	4-1/2" Trackball Ball, Red Translucent	48.25	45.85
55-0300-02	4-1/2" Trackball Ball, Blue Translucent	48.25	45.85
55-0300-03	4-1/2" Trackball Ball, Green Translucent	48.25	45.85
55-0300-05	4-1/2" Trackball Ball, Yellow Translucent	48.25	45.85

TRACKBALL MOUNTING KITS

- Metal mounting plate to adapt trackball to wood or metal control panels
- Available for 1-1/2", 2-1/4", 3" and 3" High Ball trackballs
- Durable Black River powder coated finish or Clear zinc finish available
- Innovative method of securing trackball to plate to allow for no external hardware along top surface of mounting plate
- Includes all necessary washers and nuts to assemble
- Trackball sold separately

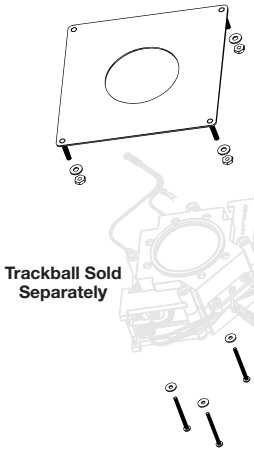

MOUNTING DIMENSIONS

1-1/2" MOUNTING PLATE

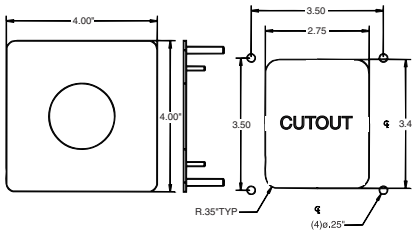

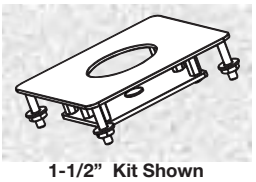

1-1/2" Kit Shown

2-1/4 MOUNTING PLATE

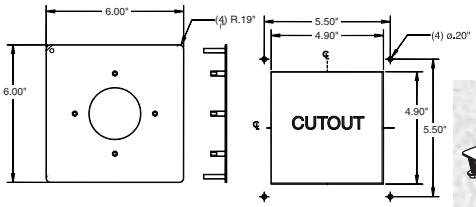

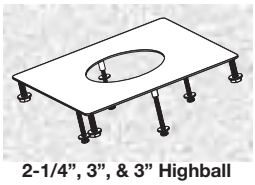

2-1/4", 3", & 3" Highball Kit Shown

3" MOUNTING PLATE

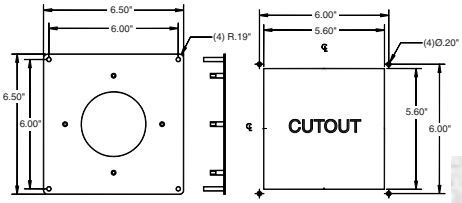

3" HIGHBALL MOUNTING PLATE

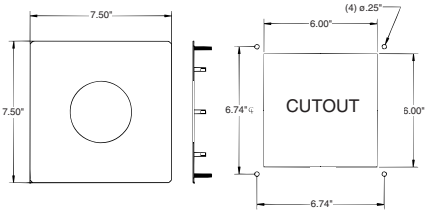

3" Golden Tee & PGA Tour Kit Shown

Part Number	Trackball Size	Finish	Price per ea.	L/6
55-0306-00	1-1/2"	Black	27.35	26.25
55-0203-00	2-1/4"	Black	11.00	10.35
55-0202-00	2-1/4"	Clear Zinc	11.90	11.35
55-1101-00	3"	Black	11.00	10.35
55-1102-00	3"	Clear Zinc	9.80	9.25
55-0321-00	3"	Golden Tee PGA Tour Version	9.80	9.25
55-1103-00	3" High ball	Black	24.50	21.95
55-1104-00	3" High ball	Clear Zinc	18.60	16.75

© HAPP CONTROLS

REPLACEMENT BALLS FOR HAPP CONTROLS TRACKBALLS

- Select 2-1/4", 3" or 4-1/2" balls
- Various colors available
- Original high quality balls in our OEM Trackballs

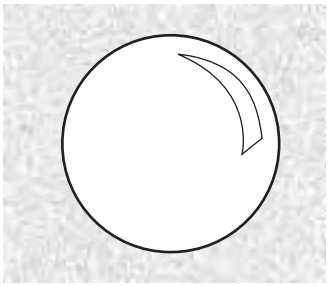

Part Number		Price per ea.
2-1/4" Replacement Balls		
95-0029-091	2-1/4" Replacement Ball - Cool Gray	18.15
95-0029-10	2-1/4" Replacement Ball - Red	18.15
95-0029-11	2-1/4" Replacement Ball - White	18.15
95-0029-12	2-1/4" Replacement Ball - Blue	18.15
95-0029-12B	2-1/4" Replacement Ball – Royal Blue	18.15
95-0029-12T	2-1/4" Replacement Ball – Translucent Blue	18.15
95-0029-16	2-1/4" Replacement Ball - Black	18.15
95-0029-19	2-1/4" Replacement Ball – Translucent Red	18.15
95-0029-389U	2-1/4" Replacement Ball - Green	18.15
3" Replacement Balls		
55-0200-000	3" Replacement Ball - Clear	54.30
55-0200-10	3" Replacement Ball - Red	21.75
55-0200-11	3" Replacement Ball - White	21.75
55-0200-12	3" Replacement Ball - Blue	21.75
55-0200-13	3" Replacement Ball - Green	21.75
55-0200-15	3" Replacement Ball - Yellow	21.75
55-0200-15T	3" Replacement Ball – Translucent Yellow	27.35
55-0200-16	3" Replacement Ball - Black	21.75
55-0200-17	3" Replacement Ball – Cocoa/Cream	24.15
55-0200-20	3" Replacement Ball – Translucent Red	24.15
55-0200-212	3" Replacement Ball – Blue/White Marble	29.05
55-0200-22	3" Replacement Ball – Translucent Blue	24.15
55-0200-23	3" Replacement Ball – Translucent Green	24.15
4-1/2" Replacement Balls		
55-0300-00	4-1/2" Replacement Ball – Translucent Red	48.25
55-0300-01	4-1/2" Replacement Ball – Translucent White	48.25
55-0300-022	4-1/2" Replacement Ball – Translucent Light Blue	48.25
55-0300-03	4-1/2" Replacement Ball – Translucent Green	48.25
55-0300-05	4-1/2" Replacement Ball – Translucent Yellow	48.25
55-0300-10	4-1/2" Replacement Ball – Red	48.25
55-0300-16	4-1/2" Replacement Ball – Black	48.25

Visit Our Web Site:
happcontrols.com
for **NEW** Product Updates!!

USB-PS/2 TRACKBALL INTERFACE KIT FOR 2-1/4", 3" OR 4-1/2"

- Kit converts existing 2-1/4" or 3" Happ trackballs to work with USB or PS/2
- Simply replace the optic boards on the existing trackball with the included new optic boards and harness
- Connects directly to either a USB or PS/2 port on a PC
- Compatible with Windows 98™, Windows 2000™, Windows ME™, and Apple Macintosh iMac™, Power PC™, with OS 8.5 or higher, Linux ™ with USB HID support
- No external power supply needed
- Automatically detects whether it is connected to a USB of PS/2 port and configures itself accordingly
- Supports up to three buttons (sold separately)
- Includes both .187" and .250" terminal connectors for pushbutton switches
- For 4-1/2" Happ trackballs use 56-0114-00K

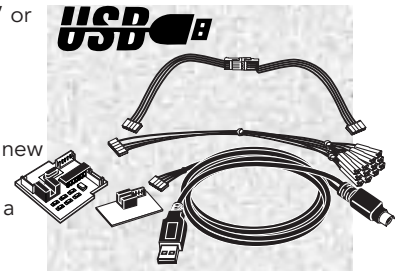

Part Number		Price per ea.
56-0113-00K	PS/2 & USB Trackball Interface Kit for 2-1/4" and 3"	43.85
56-0114-00K	PS/2 & USB Trackball Interface Kit for 4-1/2"	50.95

3" TRACKBALL SUPPORT PLATE

- Thick 13 gauge metal plate to offer additional support for 3" Trackball for those rough locations
- Easy to install, simply place on bottom of trackball and tighten existing fasteners
- Works on all 3" Trackballs
- 3.75" x 3.75"

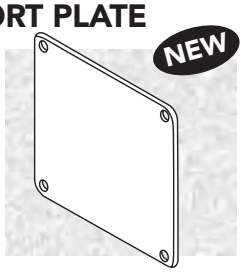

Part Number		Price per ea.
95-1828-10	3" Trackball Support Plate	2.10

TRACKBALL ENCLOSURE

- Trackball can now be mounted into panel without being enclosed with the use of this enclosure
- Large enough to accomidate both 2-1/4" and 3" trackballs with one button on left and right side of trackball
- Black powder coated finish
- Includes rubber grommet

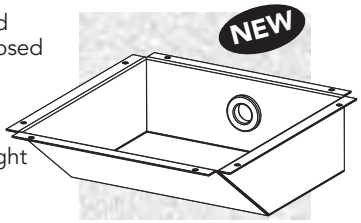

Part Number		Price per ea.
95-2198-00	Trackball Enclosure	41.35

ROLLER AND IDLER KITS FOR TRACKBALLS

- Kit includes 2 steel rollers and 1 steel idler shaft
- For use in Happ Controls trackballs only
- Overall width of 2-1/4" trackball kit parts:
  - Idler shaft: 1.755" W
  - Roller shaft: 2.265" W
- Overall width of 3" trackball kit parts:
  - Idler shaft: 2.370" W
  - Roller shaft: 2.933" W

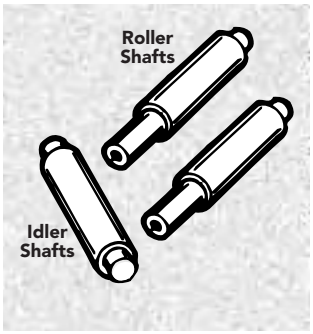

Part Number		Price per ea.	L/6
95-0830-00	Roller and Idler Kit for 2-1/4" Trackball	7.85	7.30
95-0831-00	Roller and Idler Kit for 3" Trackball	13.25	11.90

3" TRACKBALL REPAIR KIT WITH STEEL SHAFTS AND BEARINGS

- Kit includes 2 steel roller shafts, 1 steel idler shaft, and 6 bearings
- Overall width of shafts:
- Idler shaft: 2.370" W
- Roller shaft: 2.933" W
- Bearings are pre-lubricated for optimal performance
- For use in Happ Controls 3" trackballs only

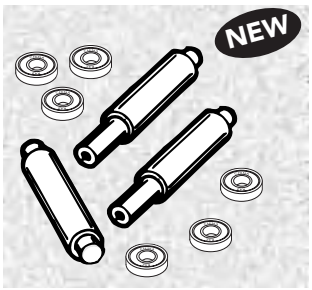

Part Number		Price per ea.
95-0831-WB	3" Trackball Repair Kit w/Shafts and Bearings	31.20

BEARINGS FOR TRACKBALLS

- For use in both 2-1/4" and 3" trackballs
- Each trackball requires 6 bearings per assembly
- Exact OEM Specification for optimal performance
- Pre oiled to OEM specification

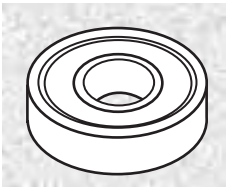

Part Number		Price per ea.
95-0570-00	Bearings for Trackballs	3.75

"RED BOARD" PRINTED CIRCUIT BOARD FOR HAPP CONTROLS TRACKBALLS

- This new "Red Board" PCB has improved circuitry to guarantee an optimized performance signal both at low and high rpm speeds
- Optic board uses surface mount technology and superior optics for increased reliability and performance
- Replaces the original A052-1010-00 Green design board

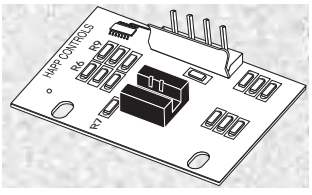

Part Number		Price per ea.	L/6
A052-1011-00	Printed Circuit Board	19.15	17.25

PS/2 EXTENSION CABLE

- Shielded and jacketed PVC cable
- Male on one side and Female on the other
- Used to extend length of PS/2 devices such as keyboards, mouse, etc.
- 6' overall length
- 6 pin

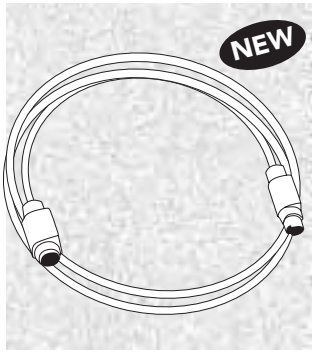

Part Number		Price per ea.
55-0273-00	PS/2 Extension Cable, 6'	5.10

USB EXTENSION CABLE

- Used to extend a USB device such as a trackball, keyboard, printer, modem, scanner, digital camera, etc.
- Extends the A connection (flat end) of a USB cable
- Shielded PVC jacketed cable
- 6' overall length

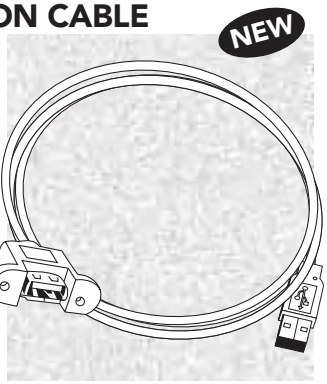

Part Number		Price per ea.
55-0278-00	USB Extension Cable	7.15

Visit Our Web Site:
happcontrols.com
for NEW Product Updates!!
HAPP
VISIT OUR WEBSITE

45 CAL. OPTICAL GUN

- **Made in the U.S.A.**
- Utilizes the Type II gun halves
- New optic PCB has innovative optic can holder that securely holds the optic in place and prevents breakage of optic legs due to shock
- Easier disassembly and assembly of gun via brass inserts inside gun, no nuts
- **<u>Now</u> with durable rubber hose**
- Innovative "inductorless" optic sensor board for increased reliability and accuracy
- Overall length of hose is 44"
- Will replace industry standard guns
- Reliable GOLD contact microswitch used on trigger switch
- Gun holster also available (96-0750-16)
- Mounting plate to hose connection swivels
- Various colors available

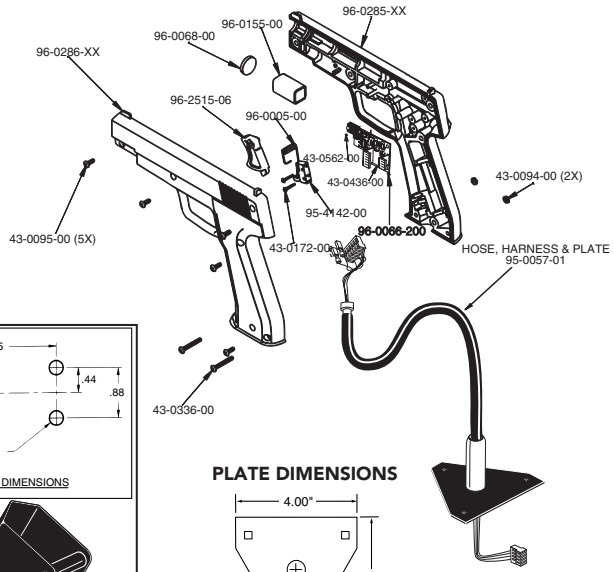

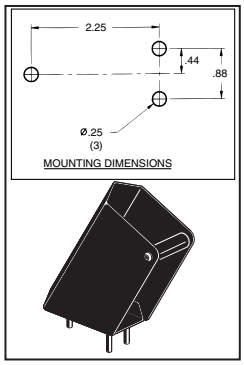

Gun Holster (P/N 96-0750-16)
For use with optical gun

PLATE DIMENSIONS

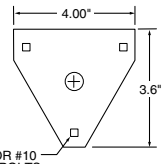

MOUNTING DIMENSIONS

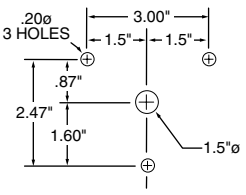

COLOR CODE

XX = Color	
10 = Red	12 = Blue
13 = Green	17 = Orange
20 = Deep Purple	112 = Baby Blue
119 = Pink	

Part Number		Price per ea.	L/10
96-2300-XX	45 Cal. Happ Controls Optical Gun Assembly w/Rubber Hose	123.70	112.40
96-2300-XXSG	45 Cal. Happ Controls Optical Gun Assembly w/Rubber Hose for Sega Virtua Cop (USA Version)	136.05	123.70
96-2302-XX	45 Cal. Happ Controls Optical Gun Assembly w/Rubber Hose w/Atari Area 51 & Maximum Force Adapter	136.05	123.70
96-0750-16	Gun Holster, Black	26.65	24.15

45 CAL. OPTICAL GUN WITH RECOIL

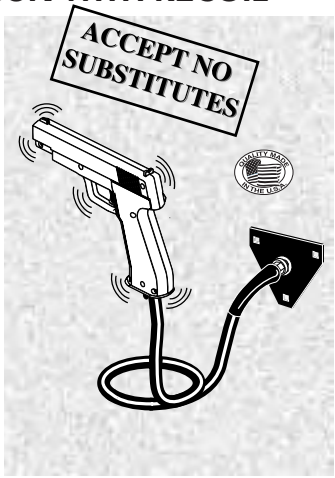

- **Made in the U.S.A.**
- Solenoid inside of gun activates to provide realistic feel
- Driver circuitry required to operate solenoid
- Solenoid ON time: 35ms 10% duty cycle, +24vdc (3 Amps Max)
- Utilizes the Type II gun halves
- New optic PCB has innovative optic can holder that securely holds the optic in place and prevents breakage of optic legs due to shock
- Easier disassembly and assembly of gun via brass inserts inside gun
- Innovative "inductorless" optic sensor board for increased reliability and accuracy
- **<u>Now</u> with durable rubber hose**
- Overall length of hose is 44"
- Reliable GOLD contact microswitch used on trigger switch
- Gun holster also available (96-0750-16)
- Mounting plate to hose connection swivels
- Optional button function can be added
- Various colors available

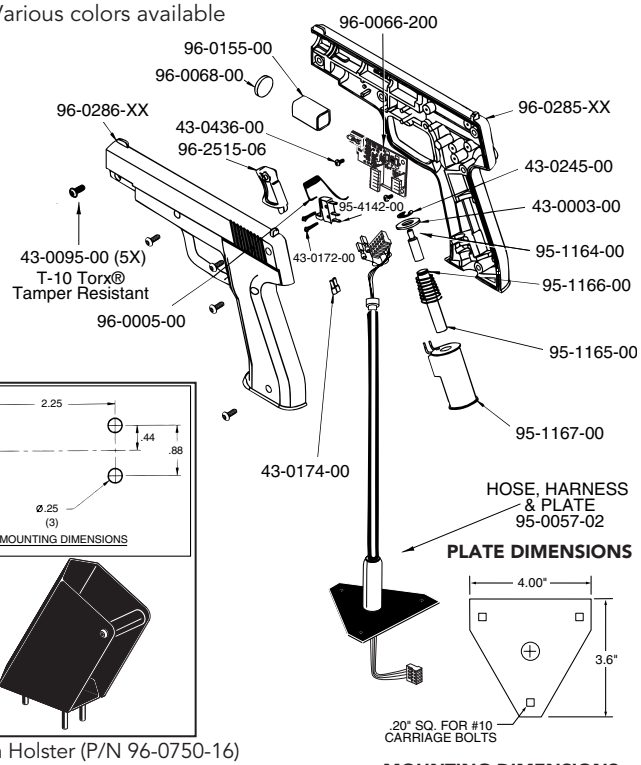

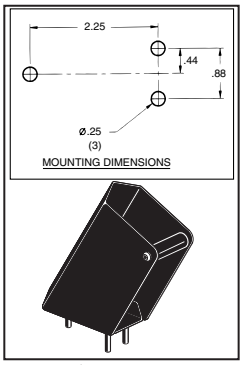

Gun Holster (P/N 96-0750-16)
For use with optical gun

PLATE DIMENSIONS

MOUNTING DIMENSIONS

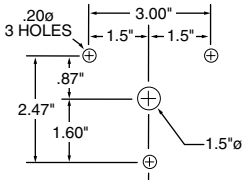

COLOR CODE

XX = Color	
10 = Red	12 = Blue
13 = Green	17 = Orange
20 = Deep Purple	112 = Baby Blue
119 = Pink	

Part Number		Price per ea.	L/10
96-2700-XX	45 Cal. Happ Controls Optical Gun Assembly with Recoil	157.40	146.20
96-0750-16	Gun Holster, Black	26.65	24.15

RUBBER REPLACEMENT HOSES FOR OPTIC GUN

ORIGINAL OPTIC GUN
TYPE I

Rubber Hose Replacement For TYPE I

NOTE: As of March 30, 2001 Type I gun halves were discontinued

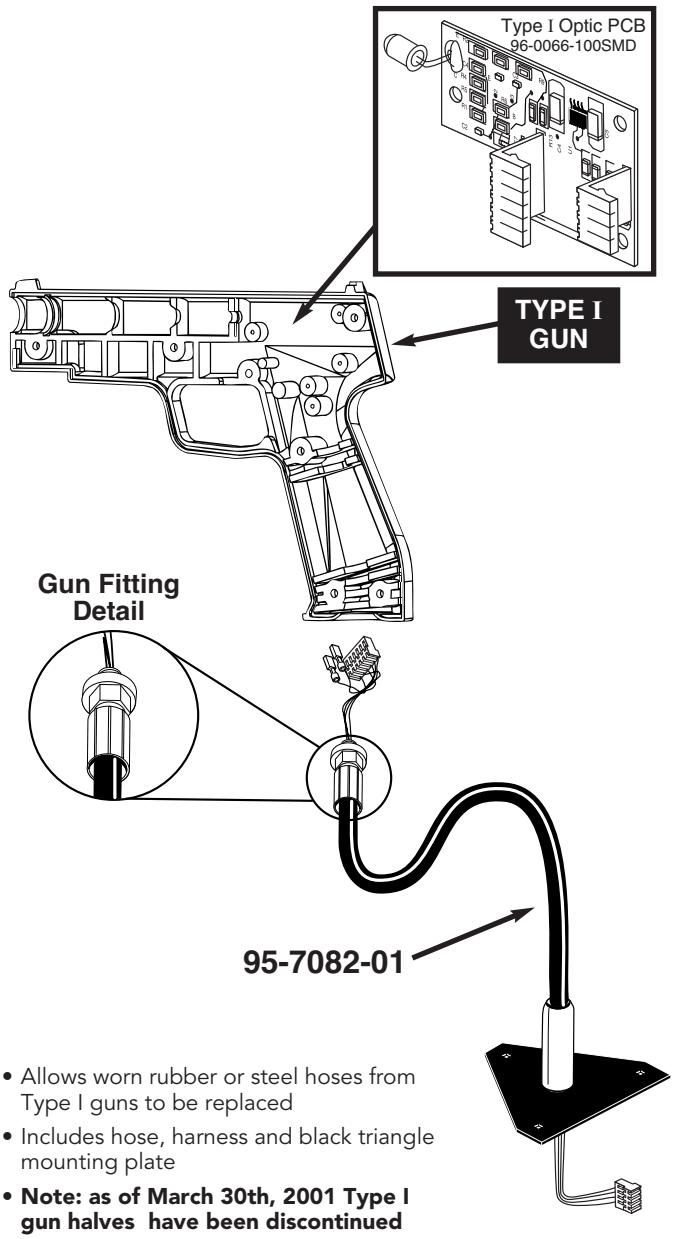

- Allows worn rubber or steel hoses from Type I guns to be replaced
- Includes hose, harness and black triangle mounting plate
- **Note: as of March 30th, 2001 Type I gun halves have been discontinued**

Part Number		Price per ea.	L/6
95-7082-01	Rubber Hose Replacement for Type I Guns	57.35	53.95

NEW OPTIC GUN WITH RECOIL OPTION
TYPE II

Rubber Hose Replacement For TYPE II

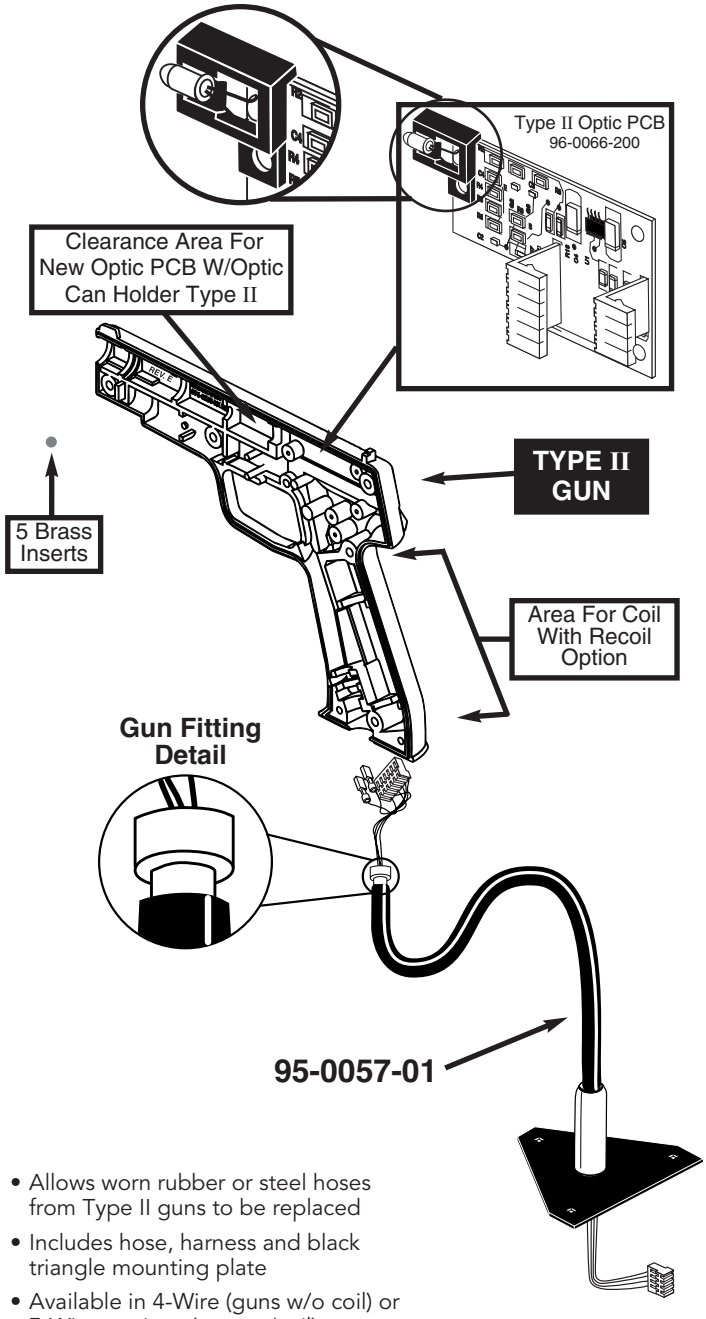

- Allows worn rubber or steel hoses from Type II guns to be replaced
- Includes hose, harness and black triangle mounting plate
- Available in 4-Wire (guns w/o coil) or 7-Wire versions (guns w/coil)

Part Number		Price per ea.	L/6
95-0057-01	Rubber Hose Replacement for Type II Guns – 4-Wire	54.60	51.35
95-0057-02	Rubber Hose Replacement for Type II Guns – 7-Wire	60.05	56.30

© HAPP CONTROLS

OPTICAL SUB MACHINE GUN

- **Made in U.S.A.**
- New innovative "inductorless" optic sensor board for increased reliability and accuracy
- **<u>Now</u> with durable rubber hose**
- Overall length of hose is 44"
- Will replace industry standard guns
- Reliable GOLD contact micro-switch used on trigger switch
- Gun holster also available (96-0676-00)
- Mounting plate to hose connection swivels
- This product is manufactured under a technology agreement with Atari Games Corporation®

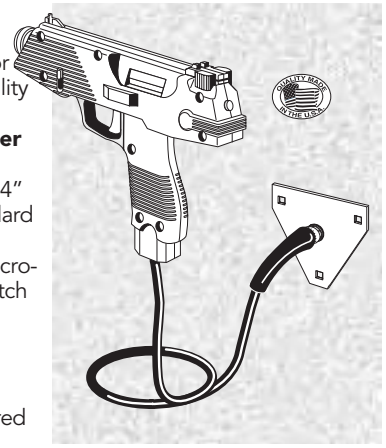

- Various colors available
- Internal feedback feature available (96-2104-00)

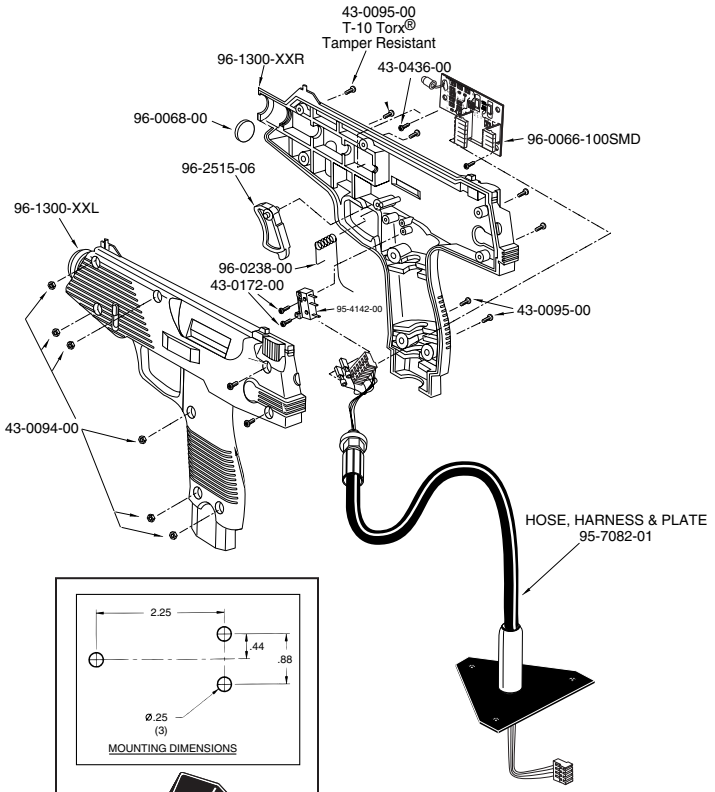

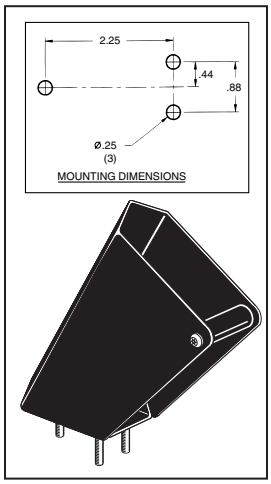

Gun Holster (P/N 96-0676-00)
For use with optical gun

COLOR CODE

XX = Color
13 = Green
19 = Silver

PLATE DIMENSIONS

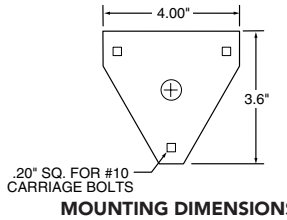

MOUNTING DIMENSIONS

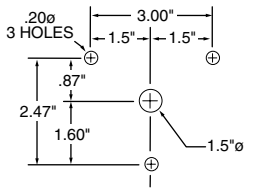

Part Number		Price per ea.	L/6
96-2900-XX	Optical Sub Machine Gun Assy.	162.65	150.60
96-0676-00	Gun Holster for Optical Gun, Black	26.65	24.15

SPACE GUN

- **Made in U.S.A.**
- High quality electronic component technology to ensure accuracy and dependability
- **<u>Now</u> with durable rubber hose**
- Overall length of hose is 44"
- Second function button (start, fire, etc.) at rear of gun
- Mounting plate to hose connection swivels
- Reliable GOLD contact microswitch used on trigger switch
- Green gun, orange button and trigger

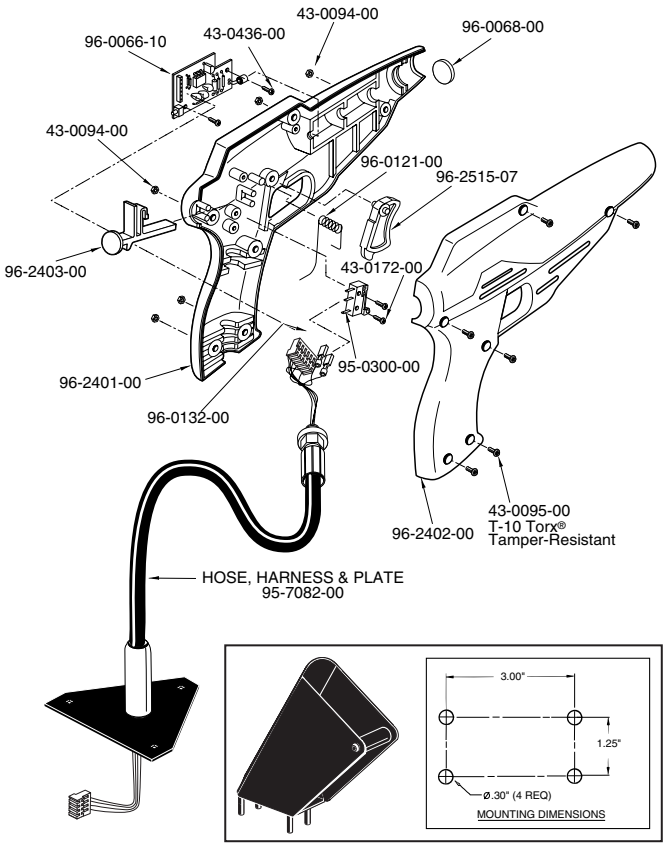

Gun Holster (P/N 96-0125-00)
For use with optical gun

PLATE DIMENSIONS

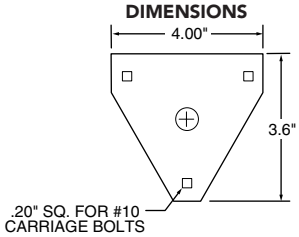

MOUNTING DIMENSIONS

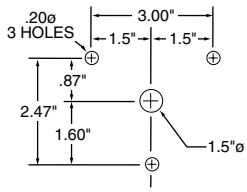

Part Number		Price per ea.	L/6
96-2405-00	Green Space Gun Assembly	180.75	174.75
96-0125-00	Gun Holster for Space Gun, Black	27.35	24.40

OPTICAL RECOIL GUN CONVERSION KIT

- **Made in U.S.A.**
- Kit includes all items necessary to utilize Happ Controls Recoil Optical Gun on Namco Ninja Assault, Time Crisis I, Time Crisis II, Time Crisis III and Point Blank
- To install, simply remove old original Namco Gun and install mounting plate to control panel and plug into existing cabinet gun harness
- **<u>Now</u> with durable rubber hose**
- Utilizes the New Type II gun halves
- Easier disassembly and assembly of gun via brass inserts inside gun, no nuts
- New optic PCB has innovative optic can holder that securely holds the optic in place and prevents breakage of optic legs due to shock
- Innovative "inductorless" optic sensor board for increased reliability and accuracy
- Solenoid inside of gun activates to provide realistic feel
- Utilizes standard Happ gun parts for Lens, Trigger, Switch & PCB
- Reliable GOLD contact microswitch used on trigger switch
- Gun colors: Red or Blue

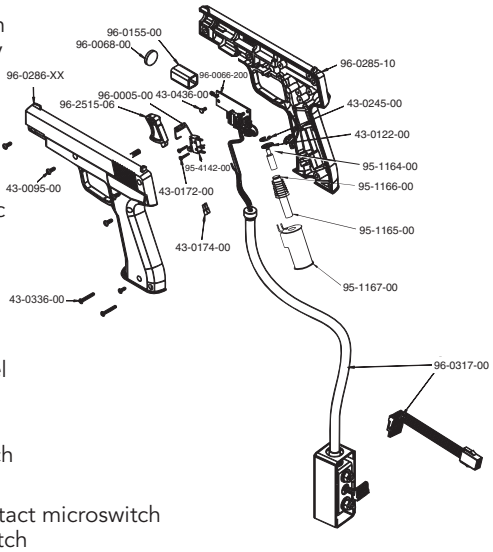

Part Number		Price per ea.	L/10
96-2700-10TC	Red Recoil Optical Gun Conversion Kit w/Rubber Hose	236.15	220.40
96-2700-12TC	Blue Recoil Optical Gun Conversion Kit w/Rubber Hose	236.15	220.40

REPLACEMENT HOSE ASSEMBLY

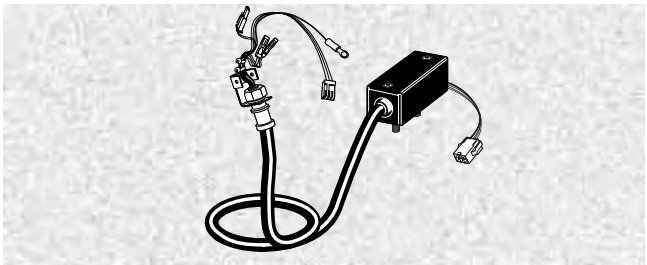

- **<u>Now</u> with durable rubber hose**
- Replaces the original hose assembly utilized on Namco Ninja Assault, Time Crisis I, Time Crisis II, Time Crisis III and Point Blank Guns
- Specialized design to provide increased strength over original design hose

To install, simply remove old original Namco Gun hose and install new hose assembly

Part Number		Price per ea.
96-0546-00	Replacement Hose Assembly	185.25

45 CAL. RECOIL OPTICAL GUN KIT

- **Made in U.S.A.**
- Utilizes the new Type II gun halves
- Allows Recoil gun action to be added to Non-Recoil games currently utilizing standard optical guns to give your earnings a "Kick"
- New Optic PCB has innovative optic can holder that securely holds the optic in place and prevents breakage of optic legs due to shock.
- Innovative "inductorless" optic sensor board for increased reliability and accuracy
- **<u>Now</u> with durable rubber hose**
- Easier disassembly and assembly of gun via brass inserts inside gun
- Overall length of hose is 44"
- Will replace industry standard guns
- Utilizes standard Happ gun parts for Lens, Trigger & Switch
- Reliable GOLD contact microswitch used on trigger switch
- Mounting plate to hose connection swivels
- Easy to install

Note: For Time Crisis I and II, Time Crisis III use 96-2700-10TC (Red) or 96-2700-12TC (Blue). These will directly replace the original Time Crisis guns.

Kit Includes
- Red 45 Cal. Recoil Gun
- Blue 45 Cal. Recoil Gun
- Recoil Control PCB harnesses
- 24v Power Supply
- (2) "Recoil Gun Gives Your Gameplay a Kick!"decals
- Instructions

Will work on the following gun games;
Area 51
Egg Venture
House of the Dead
Lethal Enforcers 1 & 2
Maximum Force
Point Blank
Police Trainer
Virtua Cop 1 & 2
Zero Point and Others

Part Number		Price per ea.	L/6
96-2700-RBKIT	45 Cal. Recoil Optical Gun Kit w/Rubber Hoses	321.20	315.50

© HAPP CONTROLS

OPTICAL GUN HALVES & PCB UPDATE KIT

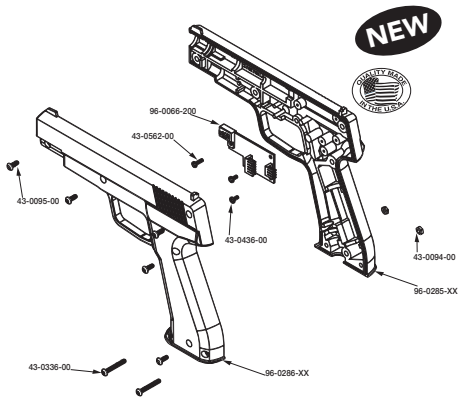

- Update standard 45 Cal. optical guns to utilize the newest handle (Type II) and optic PCB design
- New handles have NO nuts, so disassembly and assembly of gun is easier. Threads are molded in the right hand side of the gun
- New optic PCB has innovative optic can holder that securely holds the optic in place and prevents breakage of optic legs due to shock
- Innovative "inductorless" optic sensor board for increased reliability and accuracy
- Kit contains the following items
  - Left plastic gun half (Type II) 96-0286-XX
  - Right plastic gun half (Type II) 96-0285-XX
  - New optic PCB with optic can holder 96-0066-200
  - Optic PCB screws (2) 43-0436-00, (1) 43-0562-00
  - Gun handle screws (5) 43-0095-00

Note: This update kit will only work with steel hoses or Type II rubber hoses. It will NOT work with Type I rubber hoses

Part Number		Price per ea.
96-2600GK-10	Red Optical Gun Halves & PCB Update Kit	45.90
96-2600GK-12	Blue Optical Gun Halves & PCB Update Kit	45.90

AMERICAN LASER GAMES OPTICAL GUN CONVERSION KIT

- **Made in U.S.A.**
- "New" "Faster Play"
- Players can reload & shoot gun much faster which could lead to increased repeat play
- **Now with durable rubber hose**

Kit Includes:

- Happ Optical Gun Assembly with Rubber Hose
- Adapter Harness to plug Gun into PCB
- Kit Style Pedal (Mounts to Front of Cabinet)
- Decal Sheet with new game instructions
- "Faster Play" To Reload Gun Press & Release Pedal
- Quick Connect Terminals for Pedal
- Hardware to Mount Gun to Cabinet
- Mounting Template
- Instructions
- **Will not work on "Fast Draw" Game**

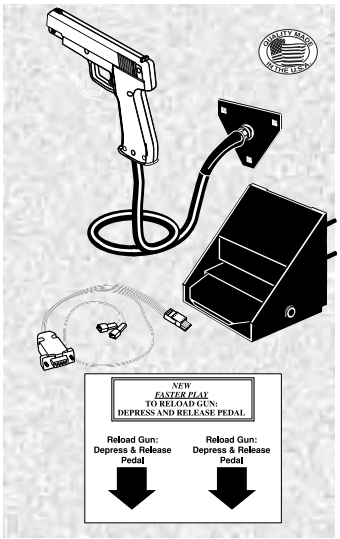

COLOR CODE

XX = Color
10 = Red
12 = Blue
17 = Orange

Part Number		Price per ea.	L/10	L/20
96-0158-XX	American Laser Games Optical Gun Conversion Kit	265.00	259.00	239.75

UNIVERSAL OPTIC GUN BOARDS

NEW

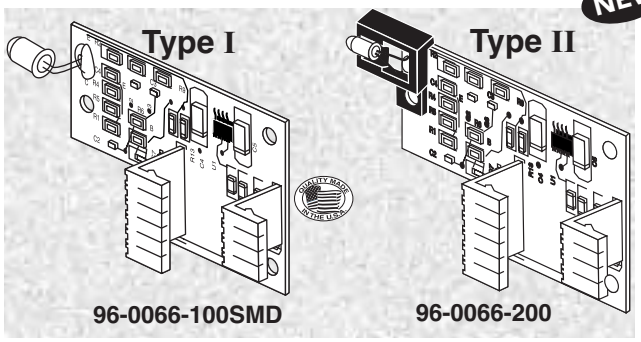

- New surface mount design
- Universal PCB design allows one PCB to be used for both 4-Pin and 6-Pin applications
- New innovative "Inductorless" circuit design for increased reliability
- Direct replacement for Happ Controls and Atari optic guns
- Type I Optic PCB has legs of optic sensor glued to aid in shock absorption
- New Type II Optic PCB has innovative optic can holder that securely holds the optic in place and prevents breakage of optic legs due to shock

Part Number		Price per ea.	L/10
96-0066-100SMD	Universal Optic Gun Board (Type I)	36.25	30.20
96-0066-200	Universal Optic Gun Board with Optic Holder (Type II)	36.25	30.20

REPLACEMENT PARTS FOR UNIVERSAL OPTICAL GUN BOARD

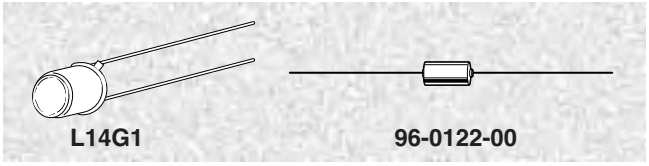

Part Number		Price per ea.	L/10
L14G1	Photo Transistor Sensor	10.00	9.55
96-0122-00	Inductor, 5.6 Millihenry	6.00	5.75

ADAPTER HARNESSES

- Gun adaptor harness allows optical gun to be easily adapted to other games
- Simply plug gun into adapter and then plug into game cabinet harness

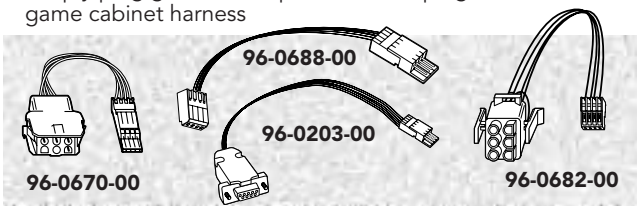

Part Number	Adapts From	Adapts To	Price per ea.	L/10
96-0670-00	Happ Gun	Atari Area 51, Maximum Force and Site 4 Games	7.25	6.75
96-0203-00	Happ Gun	Atari Cops Game	7.25	6.75
96-0688-00	Happ Gun	Zero Point Game	6.10	5.55
96-0682-00	Atari Area 51 Maximum Force Games	Happ Gun	7.25	6.75
95-0895-00	Happ Submachine Gun	Crypt Killer	14.55	9.70
95-2059-00	Adapter Harness Carnevil Gun	Crypt Killer	4.95	3.55

HAPP CONTROLS 27" PUMP ACTION SHOTGUN

- Will replace most OEM shotguns
- Optic PCB has innovative optic can holder that securely holds the optic in place and prevents breakage of optic legs due to shock
- Durable rubber hose has rotating fitting on each end to help prevent damage to the hose and gun
- Slide action pump gives a realistic feel
- Reliable Cherry microswitches
- Easy disassembly and assembly of gun via brass inserts
- Color: Orange
- Made in USA

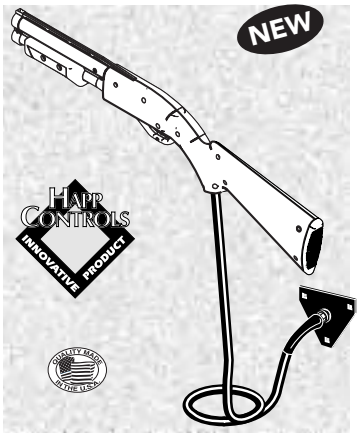

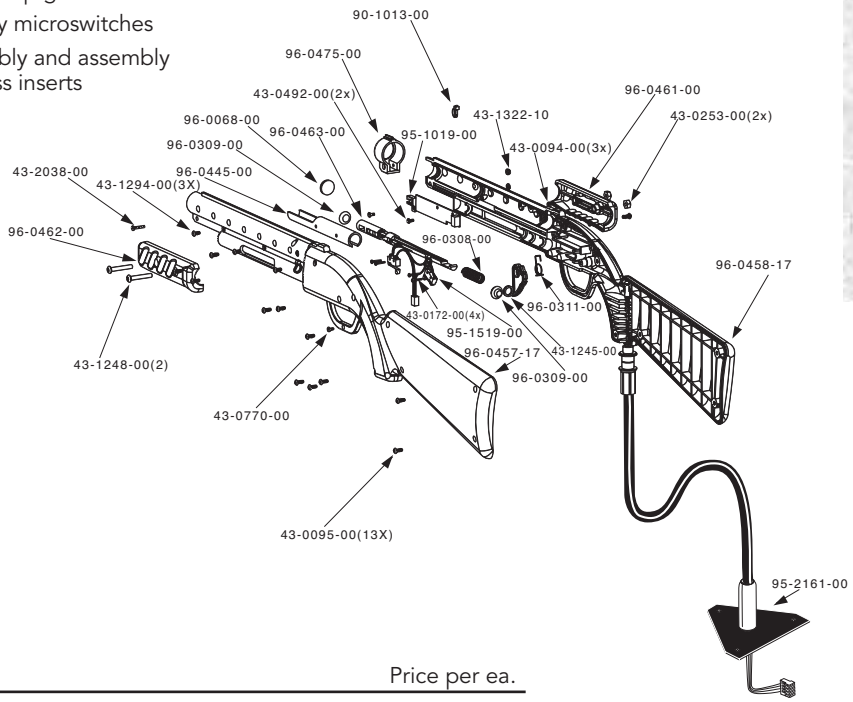

Part Number		Price per ea.
96-0476-17	Happ Controls 27" Pump Action Shotgun	189.00

SAMMY SCOPE GUN

Sammy

- Original OEM gun for American Sammy Sport Shooting game for ATOMISWAVE game system.
- Clear gun with red LED laser sight
- Durable rubber hose assembly
- Reliable optic PCB has innovative optic can holder that securely holds the optic in place and prevents breakage of optic legs
- Made in USA

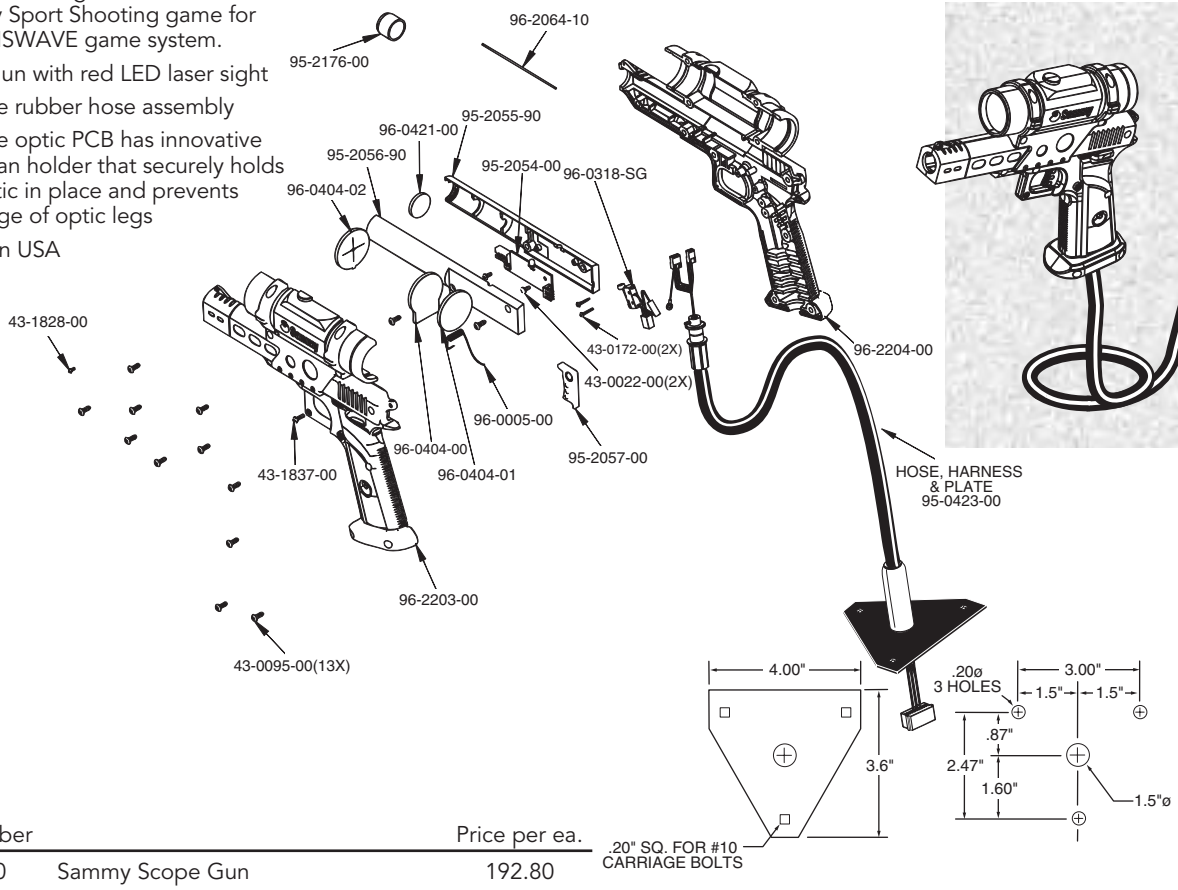

Part Number		Price per ea.
53-50-320	Sammy Scope Gun	192.80

AMERICAN SAMMY 27" PUMP ACTION SHOTGUN

- Made in USA
- Original OEM shotgun from American Sammy
- For use on the following American Sammy games:
  - Wing Shooting Championship
  - Turkey Hunting USA
  - Deer Hunting USA
- New optic PCB has innovative optic can holder that securely holds the optic in place and prevents breakage of optic legs due to shock
- Durable rubber hose, 57" length
- Reliable GOLD contact microswitch used for the trigger switch
- Color: Orange
- Slide action pump gives realistic feel
- Easier disassembly and assembly of gun via brass inserts inside gun, no nuts
- Holster clip set (sold separately) 95-50-303 Shown on pg. 335

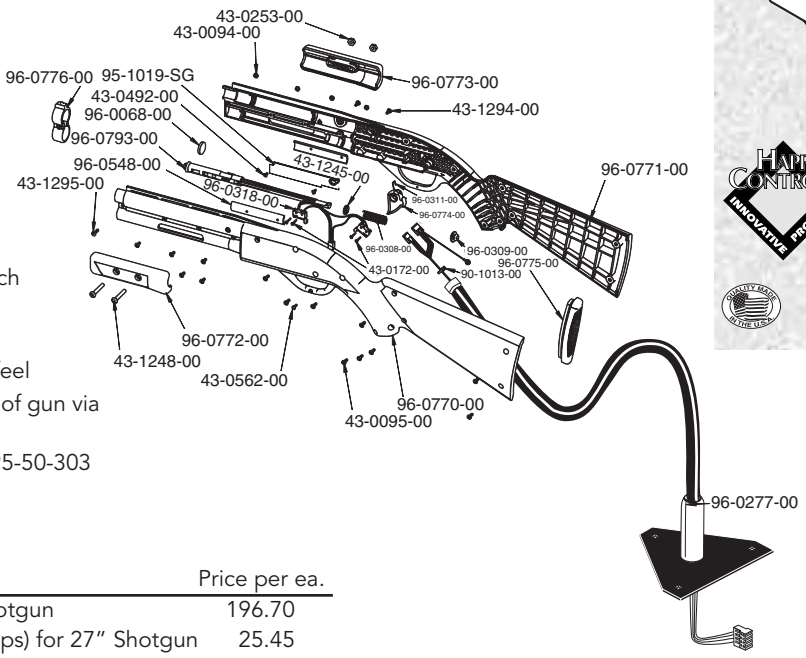

Part Number		Price per ea.
99-50-310	27" Pump Action Shotgun	196.70
99-50-303	Holster Clip Set (2 clips) for 27" Shotgun	25.45

INCREDIBLE TECHNOLOGIES 29" PUMP ACTION SHOTGUN

- Made in USA
- Original OEM shotgun from Incredible Technologies used on Big Buck Hunter
- New optic PCB has innovative optic can holder that securely holds the optic in place and prevents breakage of optic legs due to shock
- Durable rubber hose, 57" length
- Reliable GOLD contact microswitch used for the trigger switch
- Color: Orange
- Slide action pump gives realistic feel
- Easier disassembly and assembly of gun via brass inserts inside gun, no nuts
- Holster clip (sold separately) 750000075 Shown on pg. 335

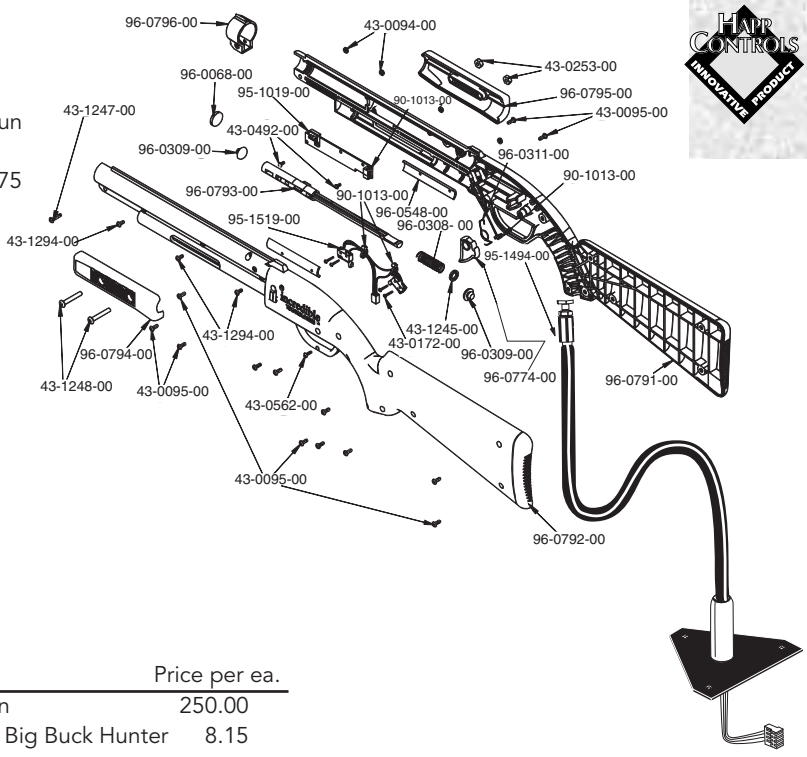

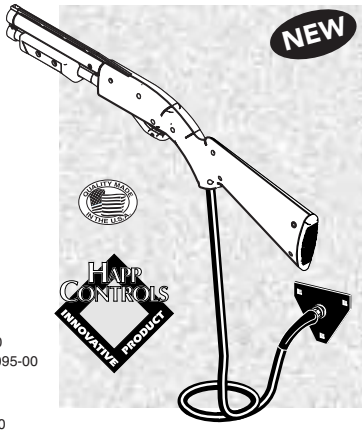

Part Number		Price per ea.
900890234	29" Pump Action Shotgun	250.00
750000075	Black Plastic Gun Clip for Big Buck Hunter	8.15

REPLACEMENT SHOTGUN FOR MIDWAY CARNEVIL

- Will replace original Midway Carnevil shotgun
- Orange gun with black pump action handle
- New innovative "inductorless" optic sensor board for increased reliability and accuracy
- Overall length 14"
- Durable rubber hose
- Made in USA
- Limited Quantity – Stock up now

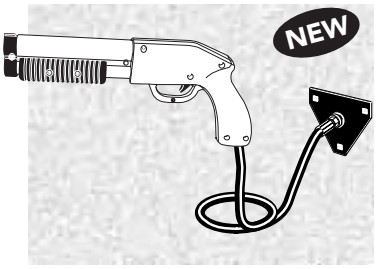

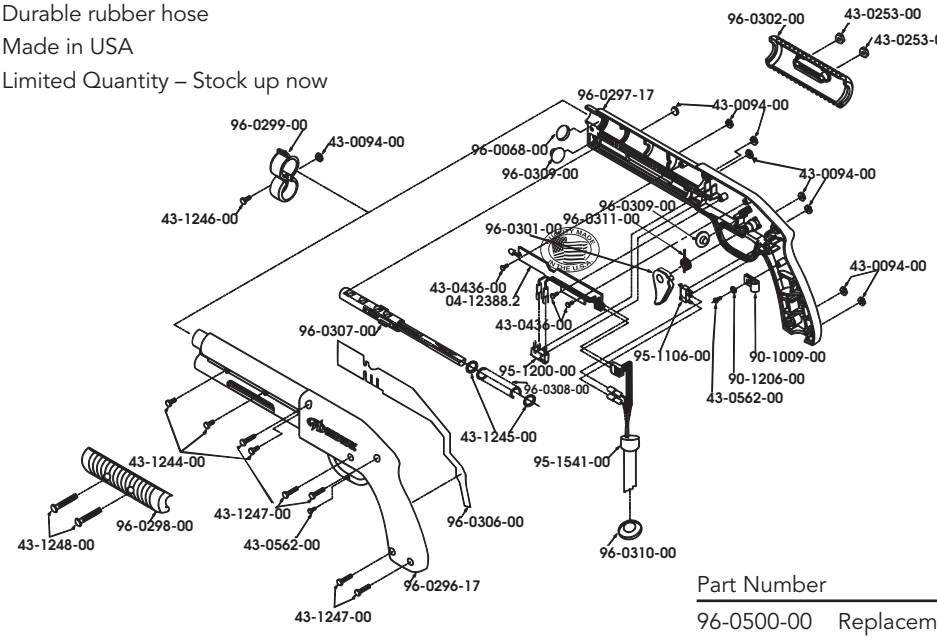

Part Number		Price per ea.
96-0500-00	Replacement Carnevil Shotgun	165.45

REPLACEMENT SHOTGUN FOR KONAMI CRYPT KILLERS

- Will replace original shotgun for Konami Crypt Killers
- Orange gun with black pump action handle
- New innovative "inductorless" optic sensor board for increased reliability and accuracy
- Overall length 14"
- Durable rubber hose
- Made in USA
- Limited Quantity – Stock up now

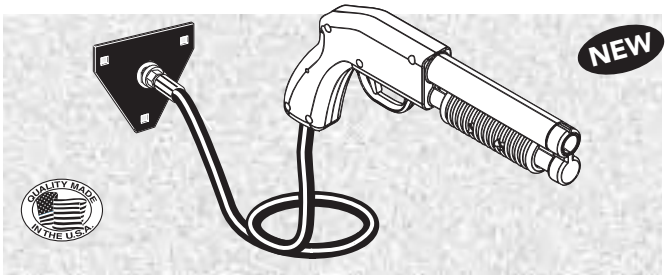

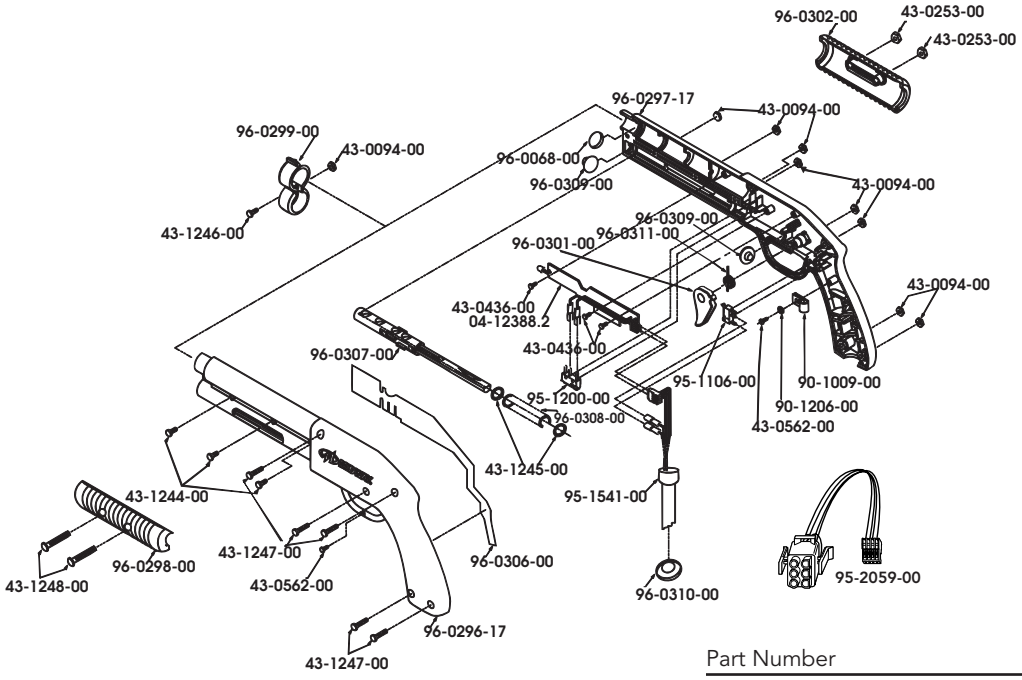

Part Number		Price per ea.
96-0424-00	Replacement Shotgun for Konami Crypt Killers	185.25

© HAPP CONTROLS

REPLACEMENT HOSE FOR SEGA GUN TYPE I

NEW

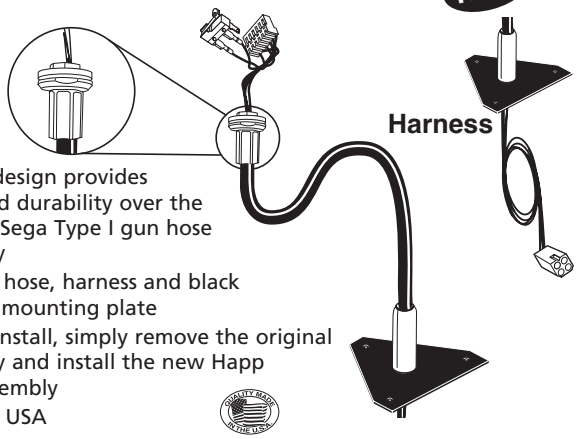

- Special design provides increased durability over the original Sega Type I gun hose assembly
- Includes hose, harness and black triangle mounting plate
- Easy to install, simply remove the original assembly and install the new Happ hose assembly
- Made in USA

Part Number		Price per ea.
95-1595-00	Replacement Hose For Sega Gun Type I	135.20

REPLACEMENT HOSE FOR SEGA GUN TYPE II

NEW

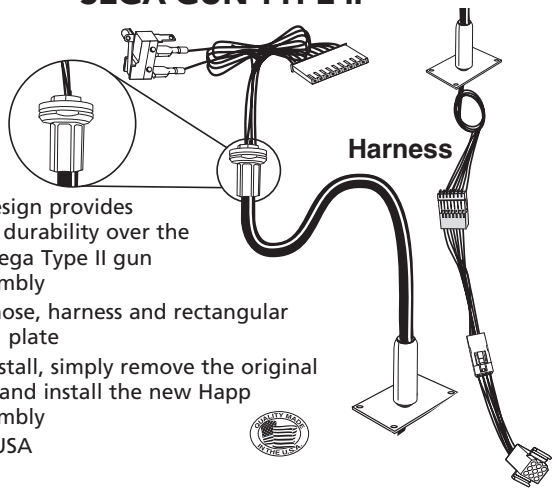

- Special design provides increased durability over the original Sega Type II gun hose assembly
- Includes hose, harness and rectangular mounting plate
- Easy to install, simply remove the original assembly and install the new Happ hose assembly
- Made in USA

Part Number		Price per ea.
95-1600-00	Replacement Hose For Sega Gun Type II	135.20

REPLACEMENT HOSE FOR KONAMI TERABURST

NEW

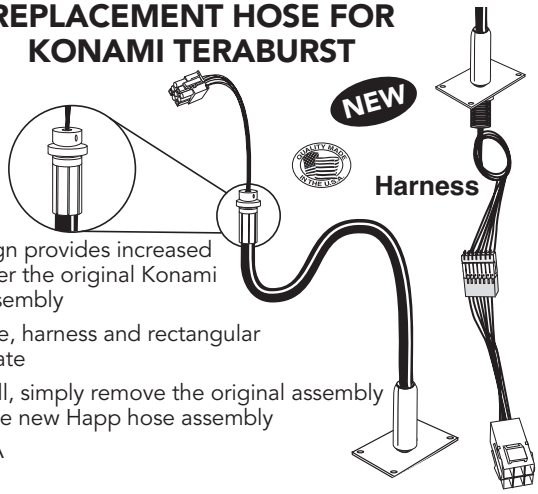

- Special design provides increased durability over the original Konami gun hose assembly
- Includes hose, harness and rectangular mounting plate
- Easy to install, simply remove the original assembly and install the new Happ hose assembly
- Made in USA

Part Number		Price per ea.
95-1608-00	Konami Teraburst gun Hose Assembly with 37" hose	176.85
95-1608-50	Konami Teraburst gun Hose Assembly with 50" hose	176.50
312815	Replacement Trigger Switch	5.55

METAL NOSE GUARD FOR NAMCO RECOIL GUNS

NEW

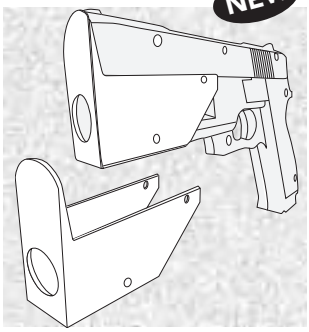

- Stop replacing those broken gun halves
- Protect and extend the life of your plastic gun halves by simply installing this durable stainless steel nose guard
- Comes with longer screw and nut required for installation
- For use in Time Crisis I, II, III, and Point Blank
- Recommend use of Loc-Tite on new screw and nut
- Made in USA

Part Number		Price per ea.
96-0453-00	Metal Nose Guard	27.50

REPLACEMENT SOLENOID ASSEMBLY FOR NAMCO RECOIL GUNS

NEW

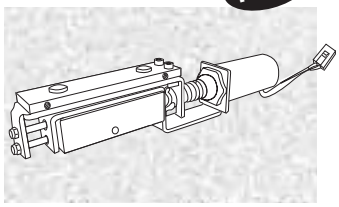

- This robust design will virtually eliminate service calls related to solenoid failure
- Slight modification of original gun halves required and the new unit simply fits into place
- 24vdc solenoid plug compatible
- For use in Time Crisis I, II, III, and Point Blank
- Made in USA

Part Number		Price per ea.
96-0452-00	Replacement Solenoid Assembly for Namco Recoil Guns	153.00

REPLACEMENT HOSE FOR KONAMI MOCAP BOXING

NEW

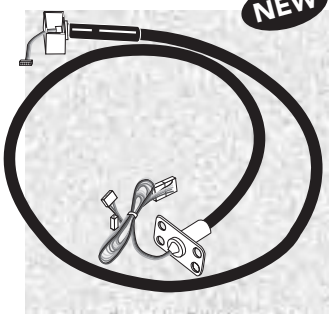

- Special design provides increased durability over the original Konami assembly
- Includes hose, harness and swivel assembly
- Easy to install, simply remove the original hose assemblies and install the new Happ assemblies
- Proudly made in the USA with durable rubber

Part Number		Price per ea.
95-1845-00	Replacement Hose for Mocap Boxing	185.00

OPTICAL GUN & PCB TESTER

- Improved version!
- A must for all operators and technicians!
- Easy and economical
- Tests all Happ optical guns and PC boards
- Can also be used to test Incredible Technologies and American Sammy optical guns
- Hand held device tests both the optical PCB and the complete gun assembly
- Simply plug in and press the test button – indicator light tells you if board is good or bad
- Additional harness now included that will test the optics on Recoil Guns, but not the coil

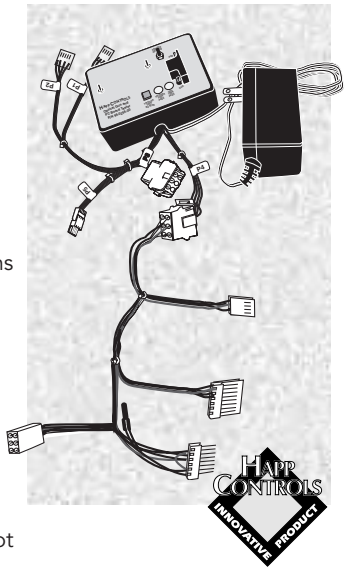

Part Number		Price per ea.
96-0256-00	Optical Gun and PCB Tester	240.90

TORX® TAMPER-RESISTANT WRENCH AND SECURITY SCREWS FOR OPTIC GUNS

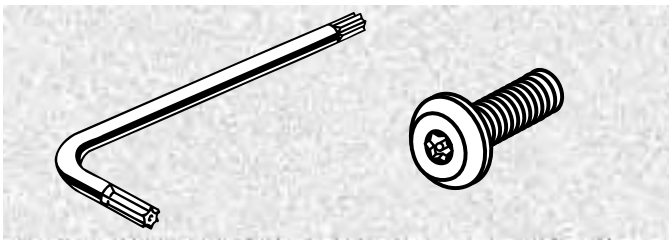

Part Number		Price per ea.	L/6
49-0452-00	Torx® Tamper-Resistant T-10 Wrench For Optic Guns	6.10	5.45
43-0095-00	T-10 Torx® Tamper-Resistant Screw	.37	–

GUN HOLSTERS

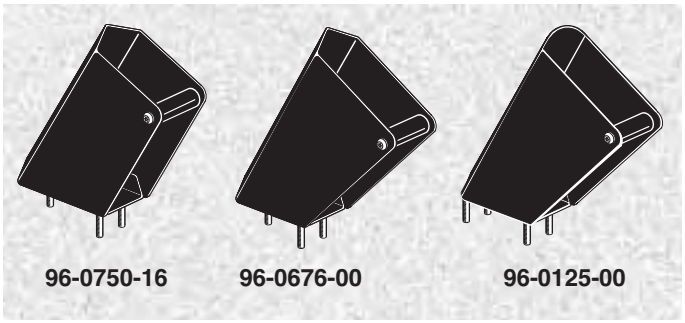

Part Number		Price per ea.	L/10
96-0750-16	Gun Holster for 45 Optical Gun, Black	26.65	24.15
96-0676-00	Gun Holster for Optical Sub machine Gun, Black	26.65	24.15
96-0125-00	Gun Holster for Space Gun, Black	27.35	24.40

GUN $AVER HOSE CLAMP KIT

- Prevents gun breakage due to the guns being dropped on the floor
- Helps prevent the guns from causing damage/scratching to the Plexiglas in front of the monitor when being hit with front of guns
- Works for both metal and rubber hoses
- Simple to install on almost any cabinet
- Comes with Installation Instructions & Template

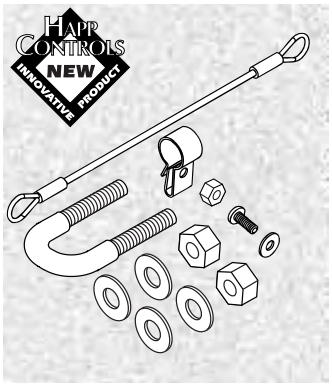

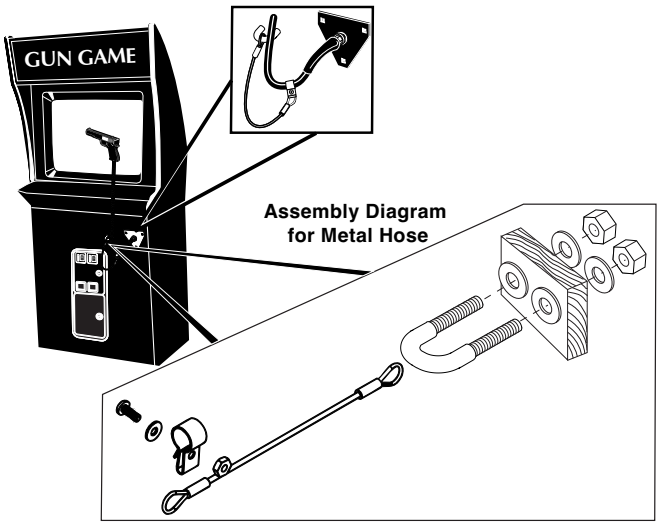

Part Number		Price per ea.
96-0290-00	Gun $aver Optic Gun Hose Clamp Kit	15.30

NAMCO GUN HOLSTER PROTECTOR KIT

- Prevents premature failure of Namco gun parts due to guns contacting meta edge of gun holster
- Attractive black textured rubber surface protects guns from damage
- For use on Time Crisis I, Time Crisis II, Time Crisis III, Point Blank and Point Blank 2 games
- Easy to install kit includes components to protect two gun holsters

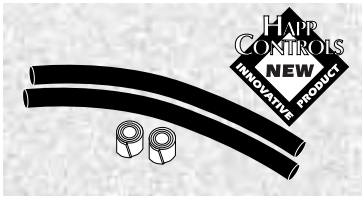

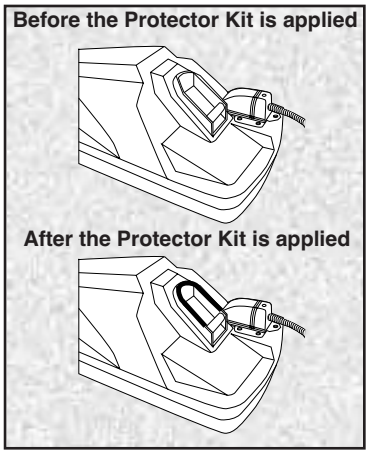

Part Number		Price per ea.	L/12
96-2025-00	Namco Gun Holster Protector Kit	10.95	10.30

© HAPP CONTROLS

HOLSTER SET FOR 27" SAMMY SHOTGUN

- Set contains two heavy duty metal clips
- Black powder coated
- All mounting hardware included
- Requires drilling of four holes

Part Number		Price per ea.
99-50-303	Holster set for 27"Sammy Shotgun	25.45
750000075	Holster set for 29"Incredible Technologies Pump Action Shotgun	8.15

HARNESS ADAPTER

- Allows Happ Controls Optic Guns to be uses on Sega games
- Can be used on Virtua Cop, Virtua Cop 2, House of Dead 1
- Will not work on Lost World or House of Dead 2
- Happ Controls exclusive product
- Made in USA

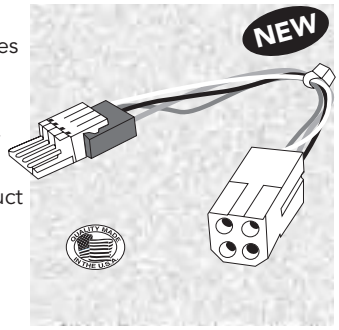

Part Number		Price per ea.
96-0459-00	Harness Adapter	4.10

BARREL HOLSTER FOR 14" SAMMY SHOTGUN

- Made of heavy duty black powder coated steel
- Bolts to the front of the cabinet
- Requires drilling three holes in the cabinet
- Holster and mounting hardware included

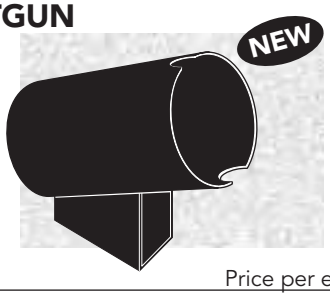

Part Number		Price per ea.
36-50-303	Barrel Holster for 14" Sammy Shotgun	34.70

OPTICAL GUN HARDWARE KITS

- Have you lost some of the hardware when you took apart your optical guns? Happ Controls provides you with a solution, with our new Optical Gun Hardware Kits
- Kits contain all the screws and nuts (where required) to re-assemble you optical guns
- Keep several kits on hand.

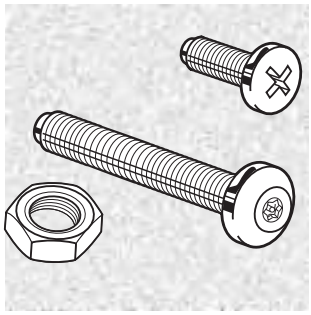

Part Number		Price per ea.
43-1888-00K	Hardware Kit – Happ Controls Type I Gun	6.10
43-1887-00K	Hardware Kit – Happ Controls Type II Gun	6.10
43-1891-00K	Hardware Kit - Midway Carnevil Gun American Sammy Deer Hunter Short 14" Gun/Incredible Technology Big Buck Hunter 29"Gun	7.10
43-1890-00K	Hardware Kit - American Sammy Deer Hunter 27" Gun	7.10
43-1889-00K	Hardware Kit – American Sammy Scope Gun	6.10
43-0370-00	Hardware Kit -Namco Lethal EnforcerI	7.10
43-0380-00	Hardware Kit – Namco Lethal Enforcer II	7.10
43-1314-00K	Hardware Kit – Sega Gun	7.10

DO YOU WANT TO KNOW EACH TIME YOUR ORDER SHIPS OUT?

e-mail notification and order **tracking information** is now available from Happ Controls! Contact your sales representative or e-mail our customer service department at: **info@happcontrols.com** with your account information.

SUPER CHEXX HOCKEY GAME

- All Time Classic
- Indestructible dome that covers the playfield
- Gameplay is fast, exciting and realistic
- Players on both sides control all 5 hockey players and the goalie
- New electronics record Goals, Shots on Goal, Period, and Running Time
- Running time is adjustable
- Automatic puck return system
- Overhead dome lighting
- Sudden death overtime
- Equipped with $0.25 coin acceptors

Part Number		Price per ea.
48-0027-00	Super Chexx Hockey Game	2,544.90

GEAR BOX FOR ICE CHEXX HOCKEY

- White gear box assembly
- Interfaces the "men" to the "rods" within the hockey game
- Ref. No. 3012X

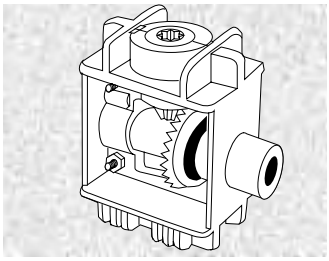

Part Number		Price per ea.
ICE3012	Gear box For ICE Chexx Hockey	22.45

PLASTIC REFLECTIVE BAT

- Used on Interactive Light Home Run Derby and I.C.E. batting game
- Lightweight plastic bat will not cause as much damage as aluminum bats
- Blue handle with 3M reflective tape on barrel
- Length: 30"

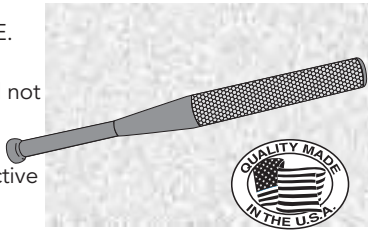

Part Number		Price per ea.
49-5236-00	Plastic Reflective Bat	33.80

REPLACEMENT PARTS FOR ICE GAMES

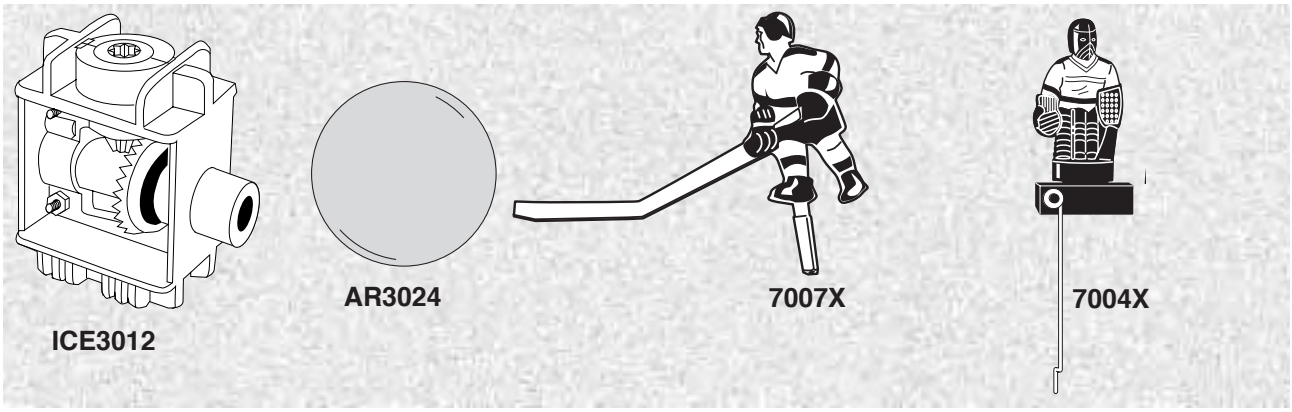

Part Number	Description	Price per ea.
3002	Chute Net Assy For Chexx And Super Chexx	31.75
3008	Player Lock Washer – Clear Plastic	.81
3011	Corner Deflector for Chexx	3.35
3013X	Puck for Chexx Hockey	12.75
3025X	Ice Surface Assy For Chexx And Super Chexx	150.55
7002X	Red/White Goalie	22.90
7003X	Red Goalie	22.90
7004X	Blue/White Goalie	22.90
7006X	Red Player Long Stick	22.90
7007X	Blue/White Player Long Stick	22.90
7008X	Red/White Player Short Stick	22.90
7009X	Red Player Short Stick	22.90
7010X	Blue/White Player	22.90

© HAPP CONTROLS

REPLACEMENT PARTS FOR ICE GAMES CONTINUED

Part Number	Description	Price per ea.
AR2008X	Ball Eject Optical Sensor For Ice Ball	60.35
AR2009X	Bonus Count Optical Sensor For Ice Ball	22.40
AR2009X12	Point Count Optical Sensor For Ice Ball	22.40
AR3024	Plastic Ice-Ball For Ice Ball Game	9.45
AR7014SX	Point Set Decal For Ice Ball	23.25
BB1034	Clutch For Full Court Fever	236.00
BB2008	Ball Gate Motor F/Cobra Hunt, Humpty Dumpty, Dump The Ump	81.15
BB2009X	Rotary Motor For Full Court Fever	185.75
BB2010	Linear Motor For Full Court Fever	185.75
BB2011X	Net Sensor Harness For Full Court Fever	240.90
BB2014X	Encoder Sensor PCB For Full Court Fever	50.30
BB3001	Basketball For Full Court Fever	22.70
BB3022X	Chassis Wheel w/Bushing For Full Court Fever	22.65
BB7006	Linear Encoder Decal For Full Court Fever	10.30
BZ3020X	Ball Set (100) For Bozo's Grand Prize Game	49.75
CC2032X	Ticket Owed PCB For Cyclone	51.40
CC2033X	Jackpot Display PCB For Cyclone	79.55
CC3002X	Control Panel Assy For Cyclone	238.65
CG2008	Motor For Plush Bus	65.10
CG2012	Down Position Sensor For Plush Bus	8.70
CG2013	Left & Right Position Sensor For Plush Bus	11.30
CH2001	Target Reset Motor For Cobra Hunt, Humpty Dumpty, Dump The Ump	131.85
DU3001	White Ball For Dump The Ump	2.20
EG3001	Yellow Ball For Cobra Hunt	2.20
FP2009X	Zero Count Optical Sensor For Ice Ball	22.40
HH1014A	Player Lever (Handle) For Hungry Hippo	36.50
HH2010	Gear Motor For Hungry Hippo	91.00
HH2010A	Gear Box Only For Hungry Hippo	74.60
HH2028X	Eject Ball Sensor for Hungry Hippo	33.35
HH2029X	Motor Drive PC Board For Hungry Hippo	97.45
HH2046	35 Amp Bridge Rectifier	11.10
HH3020X	Ball Set (20) For Hungry Hippo	44.35
HP3001	Basketball For Half Pint Frenzy	13.45
ICE1002	Long Rod Collar For Chexx	28.75
ICE1003	Short Rod Collar For Chexx Game	15.95
ICE3008	Player Lock Washer For Chexx	.44
ICE3012	Gear Box For Chexx	22.45

HAPP CONTROLS ALSO OFFERS: ABA ▪ ACE ▪ COMPX NATIONAL ▪ DUO ▪ FLEX-ACE ▪ FORT ▪ GEMATIC ▪ MEDECO ▪ VAN

FAST TURN AROUND

CUSTOM ORDERS

CUSTOM LOCKS

ECONOMICAL PRICING

HIGH SECURITY

29" PUMP ACTION SHOTGUN

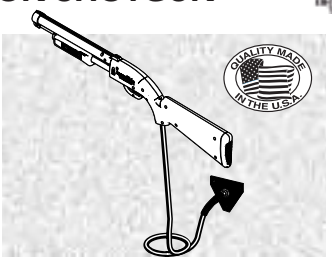

- Made in USA
- Original OEM shotgun from Incredible Technologies used on Big Buck Hunter
- New optic PCB has innovative optic can holder that securely holds the optic in place and prevents breakage of optic legs due to shock
- Durable rubber hose, 57" length
- Reliable GOLD contact microswitch used for the trigger switch
- Color: Orange
- Slide action pump gives realistic feel
- Easier disassembly and assembly of gun via brass inserts inside gun, no nuts
- Holster clip (sold separately) 750000075

Part Number		Price per ea.
900890234	29" Pump Action Shotgun	250.00
750000075	Black Plastic Holster Clip	8.15

GOLDEN TEE® FORE UPDATED CONTROL PANEL ASSEMBLY WITH HAPP CONTROLS TRACKBALL AND PUSHBUTTONS

- Update your existing Golden Tee® to the most recent design standards
- Improved trackball mounting system allows for much easier way to remove the trackball for maintenance
- Bolt and screw heads are concealed for player safety
- Includes Happ Controls 3" white trackball and pushbuttons
- Simple installation with the removal and reinstallation of a few screws
- Made in USA

Part Number		Price per ea.
900242100	Golden Tee® Fore Updated Control Panel with Happ Controls Trackball and Pushbutton	180.00

PUSHBUTTON WITH HORIZONTAL MICROSWITCH

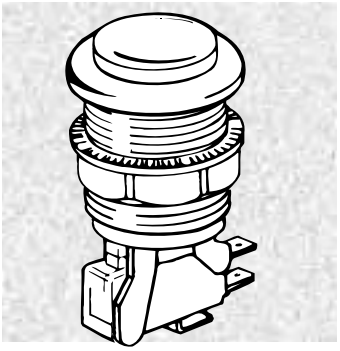

- Fits wood or metal control panels
- New longer design: Easier to use within 3/4" wood control panels with Lexan
- Microswitch, tested to 10,000,000 cycles
- .187" terminal Cherry microswitch
- Gold contact microswitch available
- Durable NYLON material
- Pushbutton mounts in 1-1/8" hole
- Protective covers also available

CHERRY®

Part Number		Price per ea.
58-9100-L	Red Pushbutton with Horizontal Microswitch	1.85
58-9111-L	White Pushbutton with Horizontal Microswitch	1.85

RETROFIT SECURITY HASP FOR GOLDEN TEE® GOLF

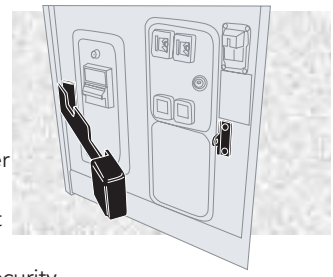

- Shackle protector and low profile mounting virtually eliminates break-in's
- Uses existing hardware on the game
- Made in the USA from 1/4" laser cut steel
- Black wrinkle powder coat paint matches the game's finish
- Uses hidden hinge for added security
- Laser cut smooth edges for safety

Part Number		Price per ea.
30-0004-01	Retrofit Security Hasp - Golden Tee®	52.50

3" DIAMETER WHITE HIGH LIP TRACKBALL FOR USE IN GOLDEN TEE® FORE 2002 - 2004 AND PGA TOUR GOLF

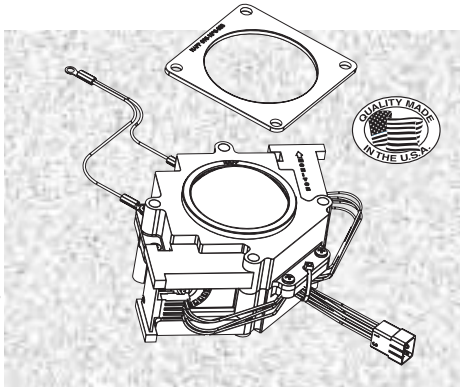

- Updated case design with high lip around trackball for use on new updated control panel design on newer Golden Tee® Fore 2003 - 2004 games.
- Includes a spacer bracket to allow this trackball to be used in Golden Tee® and Golden Tee® Fore 2002
- Highly specialized components provide the ultimate performance trackball for use with Golden Tee® Fore and PGA Tour machines
- Exceptional performance and precision is achieved from hardened steel shafts
- Optimized for all types of shots and skill levels of the most critical players
- Consistent manufacturing process provides a trackball with performance you can depend on
- Tested and preferred by elite "Gold Division" Golden Tee® Fore players
- Durability to last and maintain superior performance
- Case is constructed of durable impact resistant polycarbonate plastic material that resists cracking due to impact
- Powerful optics work even under dirty and dusty conditions
- "Red Board" PCB has improved circuitry to guarantee an optimized performance signal both at low and high rpm speeds
- Optic board utilizes surface mount technology and superior optics for increased reliability
- Standard AMOA harness included
- Note: If you have an earlier version of PGA Tour with a PS/2 configuration replace with part number 56-0400-11
- Proudly Made in USA

Part Number		Price per ea.
56-0100-11HL	3" Diameter White High Lip Trackball with Harness	94.50

© HAPP CONTROLS

WELLS-GARDNER 27" DIGITAL MONITOR

- Series D9200
- Model # WGM2792-UOGS08G - CGA, EGA or VGA
- Used on Incredible Technologies Golden Tee® Fore & Golden Tee® Fore 2002
- No isolation transformer required
- Remote PCB with adjustments for: brightness, contrast, horizontal size, horizontal position, vertical size, vertical position, pin cushion, trapezoid, color temperature, factory setup recall

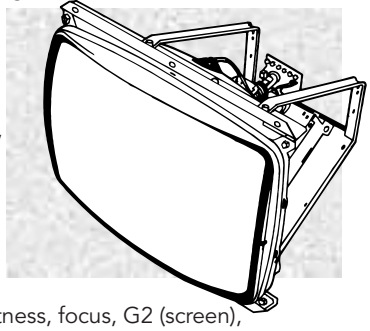

- Internal controls: sub-brightness, focus, G2 (screen), raster tilt, HV adjust
- Input voltage: 90-264 VAC. 50 60 Hz
- Open frame design
- Quality picture tube
- Agency compliance: UL6500, CSA, CB (IEC65), DHHS, CE
- Wells-Gardner Warranty: 1 year

WELLS-GARDNER
ELECTRONICS CORPORATION

Part Number		Price per ea.
49-5203-20	Wells Gardner 27" Digital Monitor	597.70

NEOTEC 27" EGA MID RES. MONITOR FOR USE IN GOLDEN TEE FORE® GAMES

- Simply drops into existing Golden Tee® Fore & Golden Tee® Fore 2002 dedicated game cabinets
- Medium resolution
- "A" monitor
- Universal mounting bracket
- Open frame design
- No isolation transformer required

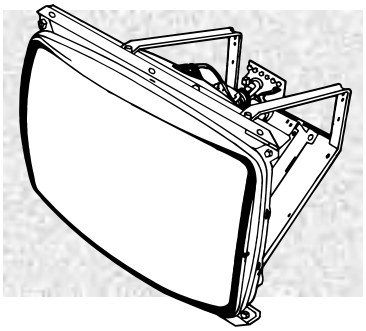

NEOTEC

Part Number		Price per ea.
49-0546-10	Neotec 27" EGA Mid Res. Monitor for use in Golden Tee Fore® Games	722.65

DO YOU WANT TO KNOW EACH TIME YOUR ORDER SHIPS OUT?

e-mail notification and order **tracking information** is now available from Happ Controls! Contact your sales representative or e-mail our customer service department at: **info@happcontrols.com** with your account information.

POWER SUPPLY FOR GOLDEN TEE FORE® 2003 GAMES

- For use in Golden Tee® Fore 2003
- Original replacement for dedicated games with a Red PCB. Will not work for original Green PCB.
- DC Output: 3.3V 14A, 5V 25A, -5V .5A, -12V 1A, 5Vsb 1.5A
- Switch selectable AC input 115VAC/230VAC
- Overload protected
- ATX size
- 267 watts
- Size: 5.9" L x 5.5" W x 3.3" H
- UL, TUV, CE approvals

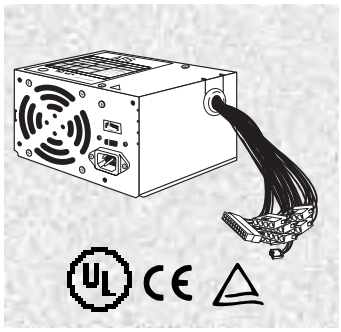

Part Number		Price per ea.
80-1247-00	Power Supply for Golden Tee Fore 2003	72.85

POWER PRO DUAL SWITCH & REMOTE CAPABLE 200 WATT POWER SUPPLY

- +5v 20A, +12v 8A, -5v .5A, -12 .5A
- UL, CSA and CE Recognized
- 200 Watt power supply
- Great power supply for video games & video poker applications
- New Innovative Dual On/Off and Remote switch capable design.

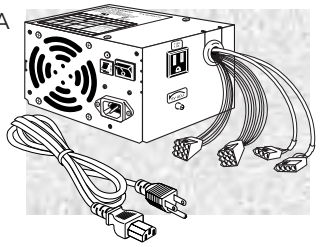

- One switch on back and other on front of power supply to allow easy access to turn power On/Off
- Additional 8 Circuit Molex plug with +5vdc and +12vdc outputs for additional accessories
- Dual AC input 115vac/230vac, selectable by switch
- AC plug for hook-up of Bill Validator, 110vac 1.0A
- Metal case - AT size
- Physical Size: 3-1/2" H x 5-7/8" W x 5-1/2" D
- Supplied with 6' long SJT power cord

Part Number		Price per ea.
80-0002-10	200 Watt Dual Switch and Remote Capable Power Supply	43.75

GUN KIT FOR 29" BIG BUCK HUNTER OPTICAL PUMP ACTION SHOTGUN

- Contains: One 29" left gun half and one 29" right gun half
- Color: orange
- Made in USA

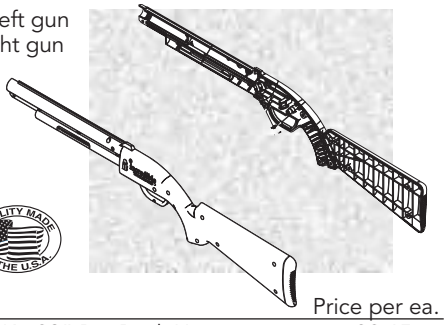

QUALITY MADE IN THE U.S.A.

Part Number		Price per ea.
96-0455-00	Gun Kit 29" Big Buck Hunter Optical Pump Action Shotgun	32.65

KONAMI

METAL REPLACEMENT COVER FOR KONAMI SILENT SCOPE AND SILENT SCOPE 2

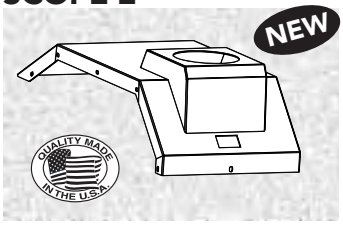

- New heavy duty metal version replaces original plastic cover
- Will withstand the everyday use by aggressive players
- Replaces Konami ref # 830700
- Made in USA
- Color: purple

Part Number		Price per ea.
830700M	Metal Replacement Cover for Konami Silent Scope and Silent Scope 2	199.00

REPLACEMENT HOSE FOR KONAMI TERABURST

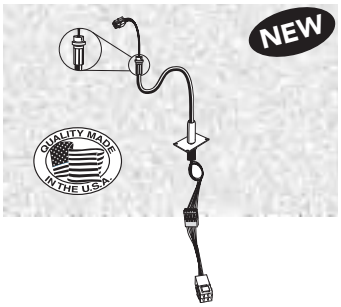

- Special design provides increased durability over the original Konami gun hose assembly
- Includes hose, harness and rectangular mounting plate
- Easy to install, simply remove the original assembly and install the new Happ hose assembly
- Made in USA

Part Number		Price per ea.
95-1608-00	Konami Teraburst Gun Hose Assemblywith 37" hose	176.85
95-1608-50	Konami Teraburst Gun with 50" hose	176.50
312815	Replacement Trigger Switch	5.55

REPLACEMENT SHOTGUN FOR KONAMI CRYPT KILLERS

- Will replace original shotgun for Konami Crypt Killers
- Orange gun with black pump action handle
- New innovative "inductorless" optic sensor board for increased reliability and accuracy
- Overall length 14"
- Durable rubber hose
- Made in USA

Part Number		Price per ea.
96-0424-00	Replacement Shotgun for Konami Crypt Killers	208.10

REPLACEMENT HOSE FOR KONAMI MOCAP BOXING

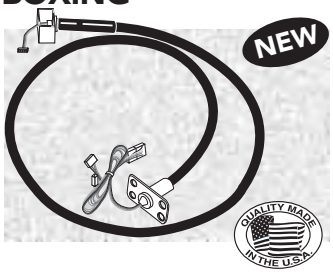

- Special design provides increased durability over the original Konami assembly
- Includes hose, harness and swivel assembly
- Easy to install, simply remove the original hose assemblies and install the new Happ assemblies
- Proudly made in the USA with durable rubber

Part Number		Price per ea.
95-1845-00	Replacement Hose for Mocap Boxing	185.00

LAMP FOR KONAMI 911 GAME

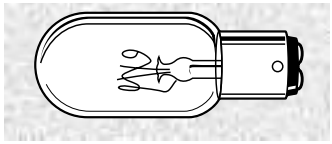

- 25T8DC
- 25 watt, 120 volts
- Color: Clear
- DC Bayonet base

Part Number		Price per ea.
91-0903-00	Lamp for Konami 911 Game	1.90

DO YOU WANT TO KNOW EACH TIME YOUR ORDER SHIPS OUT?

e-mail notification and order **tracking information** is now available from Happ Controls! Contact your sales representative or e-mail our customer service department at: **info@happcontrols.com** with your account information.

54X REPLACEMENT CD-ROM DRIVE FOR MERIT MEGATOUCH

- Speed up the performance of your games with this lighting fast 54X speed drive
- Games load up faster and provide more playing time and earnings potential
- Easy installation
- 1 Year Warranty

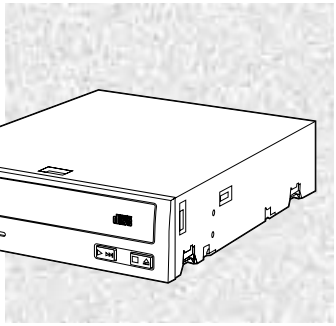

Part Number		Price per ea.
49-3133-00	54x Replacement CD-Rom drive for Meit Megatouch XL Games	72.35

REPLACEMENT POWER SUPPLY FOR MERIT MEGATOUCH XL

- Replacement for Merit MegaTouch XL
- AT style with fan and remote switch
- Manufacture Reference EC7528-02
- +5v 26A, +12v 9A, -5v 0.5A, -12v 0.5A
- 250 watt

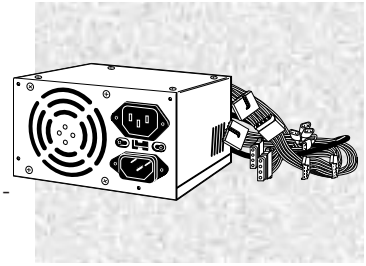

Part Number		Price per ea.
80-0312-00	Power Supply for Merit Mega Touch XL	79.99

REPLACEMENT POWER SUPPLY FOR MERIT MEGATOUCH BLUE MAXX

- Replacement for Merit MegaTouch Blue Maxx
- Manufacture Reference EC7531-01
- AT style with remote switch
- +5v 14A, +12v 5.5A, -12v 0.3A, +5vsb 1A, 3.3v 8A
- 145 Watt
- 1 Year Warranty

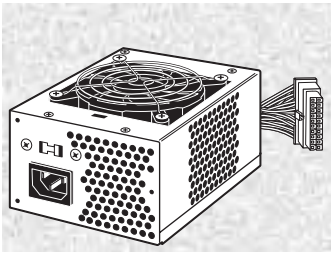

Part Number		Price per ea.
80-0314-00	Power Supply for Merit Mega Touch Blue Maxx	83.25
80-0006-35	Replacement Cooling Fan SA5117-05	5.10

REPLACEMENT POWER SUPPLY FOR MERIT RADEON FORCE

- Exact Replacement for Merit Radeon Force
- Manufacture Reference EC7531-03
- AT style with fan
- +5v 10A, +12v 2.5A, -12v 0.3A, +5vsb 0.8A, 3.3v 7A
- 110 watt

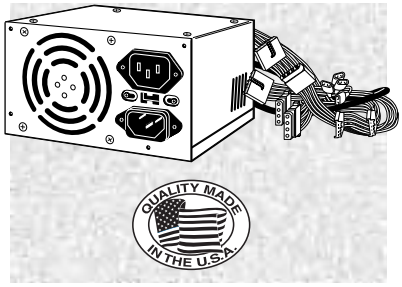

Part Number		Price per ea.
80-0312-03	Power Supply for Merit Radeon Force	81.60

COUNTERTOP PEDESTAL

- Solution to those locations that don't want to give up their valuable bar top space
- Free standing sleek and attractive design enhances touchscreen & standard style countertops
- 3/4" black thermally fused melamine with double layered plywood base for increased stability
- Decorative black t-molding with brass in middle
- Four leg levelers to prevent tipping
- Pre-drilled holes for mounting lazy susan
- 2 drink holders included
- Overall height 40"
- Weight 60 lbs.
- Light assembly required
- Made in USA

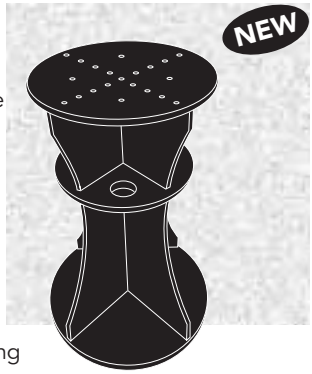

Part Number		Price per ea.
96-0435-00	Coutertop Pedestal	198.90

COOLING FAN FOR MERIT POWER SUPPLY

- Replaces FD8015B12W3
- 3-1/8" x 3-1/8" x .59" (80mm x 80mm x 15mm)
- Sleeve bearing
- 12VDC
- 3500 rpm, 45 cfm

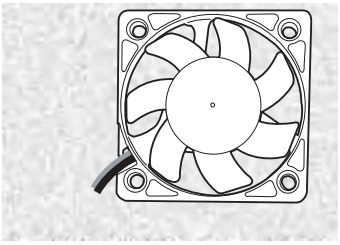

Part Number		Price per ea.
80-0006-35	Cooling Fan for Merit Power Supply	5.10

CPU DC COOLING FAN

- Ball bearing fan used in Merit Megatouch for the CPU board 12V, 0.16A

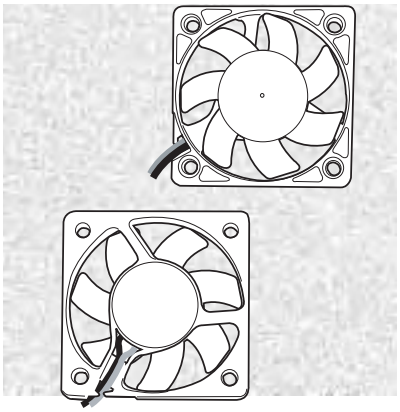

Part Number		Price per ea.
80-0006-15	CPU DC Cooling Fan	9.35

Merit INDUSTRIES, INC.

HAPP CONTROLS 13" VGA MONITORS AND TOUCH SCREENS FOR MERIT MEGATOUCH XL

- 13" "A" quality CRT
- 640 x 480 graphics mode
- Open frame, shelf mount style

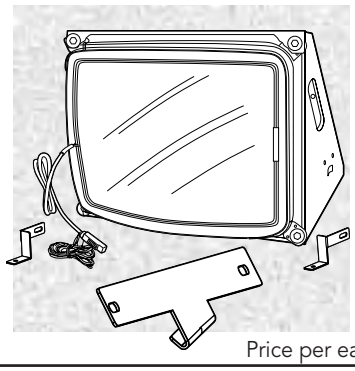

Part Number		Price per ea.
49-4022-00	Monitor Kit with Elo Touch Screen without Controller	633.60
49-4020-00	Monitor Kit with MicroTouch Touch Screen and Controller	927.45
49-4023-00	VGA Monitor without Touch Screen	403.60

32MB 72-PIN SIMM MEMORY CARD

- Used on Merit Countertops
- 72-Pin FPM Simm
- 32 Meg

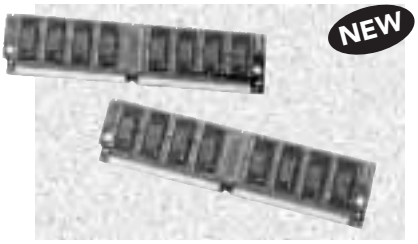

Part Number		Price per ea.
60-0550-00	32 MB Simm Memory Card	80.35

Visit Our Web Site:
happcontrols.com
for **NEW** Product Updates!!

TOUCH SCREENS AND MONITORS

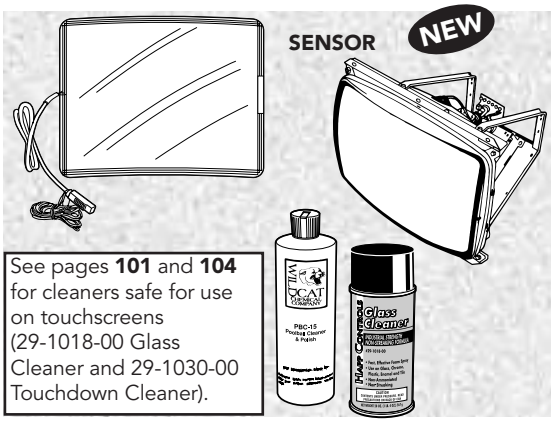

See pages **101** and **104** for cleaners safe for use on touchscreens (29-1018-00 Glass Cleaner and 29-1030-00 Touchdown Cleaner).

Part Number	Model Number		Price per ea.
49-7032-00	SA9824-01	13" MicroTouch Touch Screen Mask For Merit XL and MAXX Games	279.90
49-3068-00	002803A-145	13" ELO Touch Screen for Merit Megatouch	574.60
49-0827-00	WGM1372-MIAS30F	13" K7200 Wells-Gardner monitor for Mega Touch without Touch Screen	360.20
49-0806-00	WGT1372-MITS30F	13" K7200 Wells-Gardner monitor with Touch Screen for Merit Megatouch	716.60
49-4058-00	WGM1972-M26M54	19" K7200 Wells-Gardner Monitor for Merit Megatouch without Touch Screen	344.55
49-3065-00	017x0239-001	Touch Screen Controllers for Merit Megatouch Games	248.20
49-7034-00	–	15" LCD Monitor for Merit Easy Max	1,029.95

DO YOU WANT TO KNOW EACH TIME YOUR ORDER SHIPS OUT?

e-mail notification and order **tracking information** is now available from Happ Controls! Contact your sales representative or e-mail our customer service department at: **info@happcontrols.com** with your account information.

MIDWAY
SERVICE CENTER

GENUINE MIDWAY REPLACEMENT PARTS

- Authorized service center for Midway PC boards and hard drives
- PC Board Repairs of non-Midway Boards also
- Quick turnaround time
- 30 day warranty on all repairs
- Hard drives are not repaired, only reprogrammed
- Trained technicians with many years of experience on Midway products
- All repairs are done on a labor plus parts basis
- Repairs are done in our Elk Grove service center
- First hour of labor $125.00
- Each additional 1/2 hour of labor $40.00
- Unrepairable and No-Trouble-Found boards $50.00
- Reprogrammed hard drives $40.00
- Reprogrammed security keys $40.00
- Wells Gardner/Neotec Chassis repair $75.00, unrepairable/No-Trouble-Found $30.00

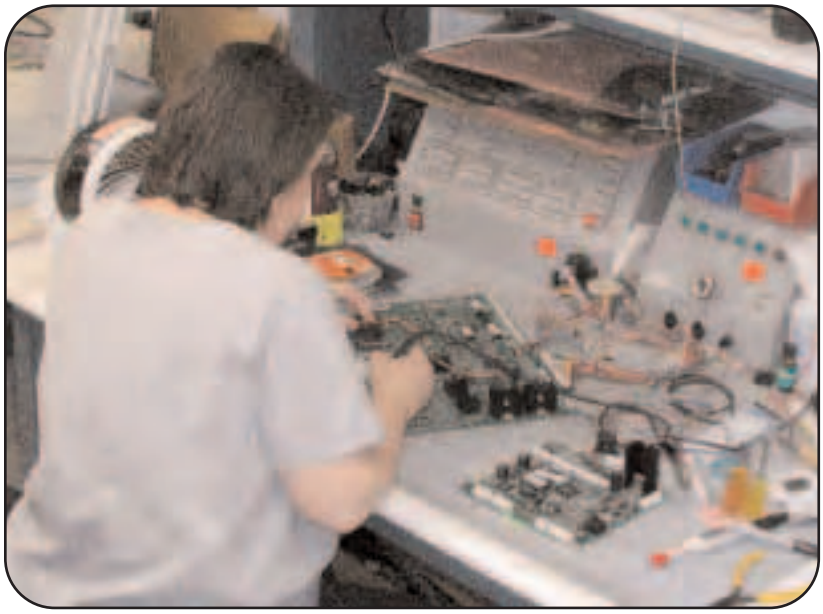

BEZELS

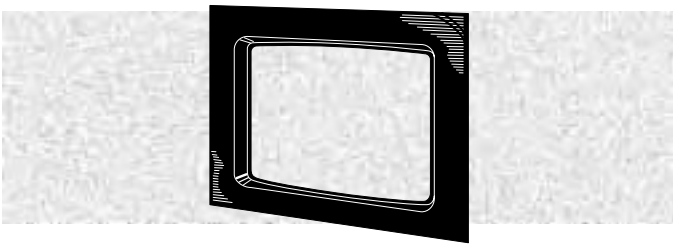

Part Number		Price per ea.
03-9002-1	BEZEL, MONITOR 31" CABINET	39.10
03-9098	BEZEL, MONITOR 25" CABINET	27.30
03-9764	BEZEL, 27" GAUNTLET 3D, DARK LEGACY	28.35
03-9893.1	BEZEL, 27" CRUIS'N WORLD 3, C.A.R.T. FURY	30.55 31.20
03-9902	BEZEL, 27" ROAD BURNERS	26.10
03-9932.1	BEZEL, 27" OFFROAD THUNDER	24.20
03-9917	BEZEL, RUSH 2049	191.20
31-2988-1	BEZEL, CARNEVIL 25"	196.90
03-9397	BEZEL, TOUCHMASTER COUNTER	191.40
03-9737	BEZEL, TOUCHMASTER 19" 1.5 BEZEL	136.05
04-12893.1	BEZEL, TOUCHMASTER INFINITY UPRIGHT	208.90

PUSHBUTTONS (ILLUMINATED)

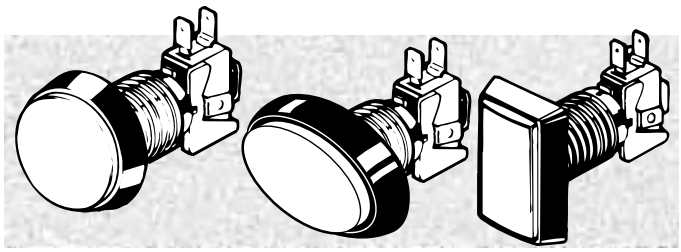

Part Number		Price per ea.
20-10129-1	IPB: MED/RND/GREEN "START"	8.05
20-10129-10	IPB: MED/RND/ORANGE "RADIO"	8.05
20-10129-2	IPB: MED/RND/ORANGE "RADIO"	8.05
20-10129-7	IPB: MED/RND/GREEN "START"	8.30
20-10129-8	IPB: MED/RND/ORANGE "RADIO"	8.30
20-10129-9	IPB: MED/RND/GREEN "START"	8.05
31-2390-1	IPB: OVAL RED "CAM 1"	8.05
31-2390-10	IPB: OVAL RED	8.05
31-2390-11	IPB: OVAL YELLOW	8.05
31-2390-12	IPB: OVAL GREEN	8.05
31-2390-13	IPB: OVAL RED - HYDRO THUNDER 25	8.05
31-2390-14	IPB: OVAL ORANGE - HYDRO THUNDER 25	8.05
31-2390-15	IPB: OVAL YELLOW - HYDRO THUNDER	8.05
31-2390-2	IPB: OVAL WHITE "CAM 2"	8.05
31-2390-3	IPB: OVAL BLUE "CAM 3"	7.95
31-2390-7	IPB: OVAL RED "VIEW 1"	8.05
31-2390-8	IPB: OVAL ORANGE "VIEW 2"	8.05
31-2390-9	IPB: OVAL YELLOW "VIEW 3"	8.05
20-10593-1	IPB: OVAL BLUE VIEW 1	7.95
20-10593-2	IPB: OVAL BLUE VIEW 2	7.95
20-10593-3	IPB: OVAL BLUE VIEW 3	7.95
20-10593-4	IPB:: OVAL YELLOW MUSIC	7.95
20-10593-5	IPB:: OVAL RED	7.95

BUTTONS CONTINUED

Part Number		Price per ea.
31-2958-1	IPB: MED ROUND "VIEW 1"	8.05
31-2958-2	IPB: MED ROUND "VIEW 2"	8.05
31-2958-3	IPB: MED ROUND "VIEW 3"	8.05
20-10209-5	IPB:: YELLOW W / LONG SHAFT	3.70
20-10127-1	IPB: RECT/RED "LO RIDER"	6.45
20-10127-2	IPB: RECT/WHITE "VIEW 2"	6.45
20-10127-3	IPB: RECT/BLUE "SKY HI - VIEW 3"	6.45
31-2390-8	IPB: - WHITE - OFFROAD CHALLENGE	8.05
31-2390-17	IPB: - WHITE - EXOTICA	5.15
31-2390-2	IPB: - WHITE - CRUIS'N WORLD	8.05
20-10127-2	IPB: - WHITE - CRUIS'N USA	6.45
20-10129-7	IPB: - START - OFFROAD CHALLENGE	8.30
31-3215-1	IPB: - START - EXOTICA	8.05
20-10129-5	IPB: - START - CRUIS'N WORLD	7.95
20-10129-1	IPB: - START - CRUIS'N USA	8.05
31-2390-7	IPB: - RED - OFFROAD CHALLENGE	8.05
31-2390-16	IPB: - RED - EXOTICA	8.05
31-2390-1	IPB: - RED - CRUIS'N WORLD	8.05
20-10127-1	IPB: - RED - CRUIS'N USA	6.45
20-10129-8	IPB: - RADIO -OFFROAD CHALLENGE	8.30
31-3215-2	IPB: - RADIO - EXOTICA	8.05
20-10129-6	IPB: - RADIO - CRUIS'N WORLD	7.95
20-10129-2	IPB: - RADIO - CRUIS'N USA	8.05
31-2390-9	IPB: - BLUE - OFFROAD CHALLENGE	8.05
31-2390-18	IPB: - BLUE - EXOTICA	5.15
31-2390-3	IPB: - BLUE - CRUIS'N WORLD	7.95
20-10127-3	IPB: - BLUE - CRUIS'N USA	6.45

PUSHBUTTONS (NON-ILLUMINATED)

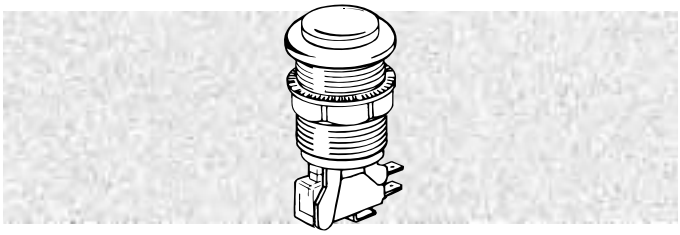

Midway Ref.	Part Number		Price per ea.
20-10209-1	58-9100-LG	Red Pushbutton with .187" Gold Microswitch	2.40
20-10209-2	58-9111-LG	White Pushbutton with .187" Gold Microswitch	2.40
20-10209-3	58-9122-LG	Blue Pushbutton with .187" Gold Microswitch	2.40
20-10209-4	58-9133-LG	Green Pushbutton with .187" Gold Microswitch	2.40
20-10209-5	58-9155-LG	Yellow Pushbutton with .187" Gold Microswitch	2.40
20-10209-6	58-9166-LG	Black Pushbutton with .187" Gold Microswitch	2.40
20-10209-7	58-9177-LG	Orange Pushbutton with .187" Gold Microswitch	2.40

© HAPP CONTROLS

CHASSIS

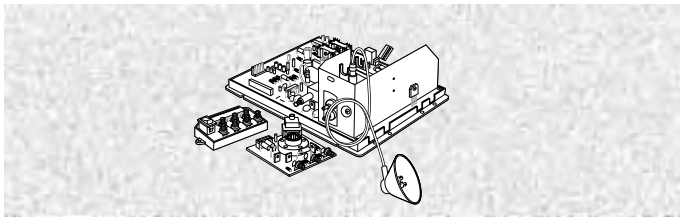

Part Number		Price per ea.
A-19972	WELLS U2000 CHASSIS & NECK BOARD	294.15
A-21526	CHASSIS & NECK ASSY 13" - TOUCHMASTER	374.55
A-21727-01	U-3000 CHASSIS & NECK 31",WELLS	545.65
A-21812	CHASSIS & NECK ASSY 19"- TOUCHMASTER	428.60
A-22424	WELLS 27" CHASSIS - THE ROCK	488.45
A-22430	WELLS 25" CHASSIS U5000- BLITZ	363.15
A-22485	WELLS 25" CHASSIS	485.75
A-22848-R	WELLS 27" CHASSIS - VAPOR TRAX (REFURBISHED)	395.00
A-23705	WELLS CHASSIS & NECK ASSY TM INF	464.10
04-10718	TOUCHMASTER - NECK BOARD	34.00
04-10882-R	NEOTEC NT-25E CHASSIS 25" MED (REFURBISHED)	378.25
04-10883	NEOTEC NT-33C CHASSIS 31" MED	521.10
04-10885	NEOTEC NT-27E CHASSIS 27" MED	495.85
04-10922	NEOTEC 39" CHASSIS ASSY STD RES	521.10
04-10928-R	NEOTEC 25" CHASSIS NY-2515C (REFURBISHED)	387.25
04-10981-R	TELCO 25" CHASSIS- CRUISN WORLD (REFURBISHED)	395.00
04-11032	NEOTEC NT-27ER CHASSIS 27" MED	491.30
04-12475	NT 350100002 CHASIS 38" MED	521.10
04-12488-R	NEOTEC CHASSIS 27" - VAPOR TRX (REFURBISHED)	378.25
04-12785	NT 270200002 CHASSIS 27" VGA	477.30
04-12942	CHASSIS & NECK W / G 27" VGA	521.10
04-13013	NEOTEC CHASSIS 27" - OFFROAD 3	501.30
04-13019	CHASSIS & NECK ASSY INFINITY	482.90
04-13053	CHASSIS & NECK 27" EXOTICA	613.00

CPU'S

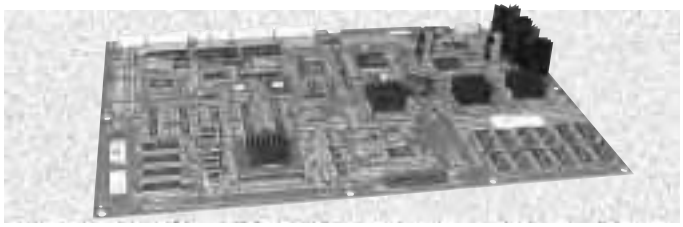

Part Number		Price per ea.
20-10489.4	AREA 51 SITE 4 CPU	606.90
A-22505	AREA 51 SITE 4 JAMMIT	52.70
A-21891.2-1	BLITZ 25"	1,478.00
A-22529.1	BLITZ 99 25"	1,478.00
A-22529-1	BLITZ 99 39"	1,478.00
A-23429	BLITZ 2K / NBA SHOWTIME	898.15
A-21870.4-3-R	CALIFORNIA SPEED 25" – (REFURBISHED)	622.20
A-22895-1-R	CARNEVIL 25" - (REFURBISHED)	1,019.00
A-23645	C.A.R.T. FURY	1,422.90

CPU'S CONTINUED

Part Number		Price per ea.
A-22532	GAUNTLET LEGENDS	827.15
A-23619	GAUNTLET DARK LEGACY	826.20
A-22131-R	HYPERDRIVE - (REFURBISHED)	622.20
A-22541	INVASION 25"	1,151.60
A-22530	NBA ON NBC	898.15
A-22628-1-R	NBA ON NBC 39" SIO ASSY. (REFURBISHED)	204.00
A-23702	NBA SHOWTIME GOLD	898.15
A-21117	OFFROAD CHALLENGE 25"	1,019.00
A-21117-1-R	OFFROAD CHALLENGE 31"	468.20
A-21117-4-R	OFFOAD CHALLENGE UPRIGHT	468.20
A-23253	OFFROAD THUNDER	3,857.10
A-22542	ROAD BURNERS 27" ASSEMBLY	827.15
A-23129	ROAD BURNERS DSIO ASSEMBLY	468.20
A-23459	SKINS	1,529.00
A-22317	SURF PLANET FILTER BOARD ASSY	47.00
A-21150	TOUCHMASTER 5000	662.00
A-23380-33	TOUCHMASTER 7000 MEGA/TM	662.00
A-23523	TOUCHMASTER INFINITY CPU ASSY	743.60
A-23811-33	TOUCHMASTER 8000 KIT WITH E-PROMS	468.20
A-22360-R	VAPOR TRX BOARD SET - (REFURBISHED)	590.60
A-22533	WAR	827.15

DECALS

Part Number		Price per ea.
AREA 51 SITE 4		
31-3140	BEZEL INSTRUCTION	15.20
31-3145	KIT-CONTROL PANEL WALLPAPER	46.85
31-3146	KIT-CONTROL PANEL ADD-ONS	35.25
CALIFORNIA SPEED		
31-2893	DASH	54.60
31-2896	PEDESTAL	29.55
31-2898	KIT SIDE PANEL RIGHT	114.60
31-2899	KIT PEDESTAL LEFT	37.50
31-2914	SEAT	39.35
CARNEVIL		
31-2989	KIT BEZEL INSTRUCTIONS	120.35
31-2990	KIT-SIDE PANEL LEFT	172.60
31-2991	KIT SIDE PANEL RIGHT	172.60
31-2993	KIT SIDE WALLPAPER	25.25
31-2994	FRONT SIDE PANEL LEFT	46.80
31-3279	BEZEL 39"	
C.A.R.T. FURY		
31-3525-1	UPPER SEAT	40.65
31-3525-2	MIDDLE SEAT	40.65
31-3634.1-2	BEZEL INSTRUCTIONS BOTTOM	23.00
CRUIS'N EXOTICA		
31-3370	PEDESTAL BACK	56.85
31-3374	SEAT DECAL	15.30

MIDWAY

DECALS CONTINUED

Part Number		Price per ea.
CRUIS'N WORLD		
31-2447	KIT - SIDE PANEL LEFT	133.50
31-2448	KIT - SIDE PANEL RIGHT	102.65
31-2449	DED. - PEDESTAL LEFT	13.10
31-2450	DED. - PEDESTAL RIGHT	13.10
31-2625.1	SEAT DECALS	24.85
31-3041	KIT - SIDE PANEL LEFT	26.95
31-3042	KIT - SIDE PANEL RIGHT	32.35
THE GRID		
31-3647	BEZEL INSTRUCTION TOP	30.65
31-3598	BEZEL INSTRUCTION BOTTOM	20.35
31-3596	CONTROL PANEL OVERLAY	75.35
GAUNTLET DARK LEGACY		
31-3505	BEZEL INSTRUCTION TOP	4.45
31-3506	BEZEL INSTRUCTION BOTTOM	4.45
31-3502-1	CONTROL PANEL HOUSING LEFT	6.45
31-3502-2	CONTROL PANEL HOUSING RIGHT	6.45
HYPERDRIVE		
31-2964-1	DASH VIEW 1	23.90
31-2964-2	DASH VIEW 2	23.90
31-2964-3	DASH VIEW 3	23.90
31-2964-4	DASH VIEW 4	23.90
31-2965-1	SIDE DECAL RIGHT	11.30
31-2965-2	SIDE DECAL LEFT	12.05
HYDRO THUNDER		
31-3239.1	SIDE PANEL LEFT	58.85
31-3308	BUTTON PLATE	19.80
31-3316	BEZEL DECAL	42.25
31-3343	BEZEL LEFT	8.60
31-3344	BEZEL RIGHT	11.10
INVASION		
31-3239.1	SIDE PANEL LEFT	58.85
31-3308	BUTTON PLATE	19.80
31-3316	BEZEL DECAL	42.25
31-3343	BEZEL LEFT	8.60
31-3344	BEZEL RIGHT	11.10
MORTAL COMBAT 4		
31-2855	KIT-CONTROL PANEL HSG	18.75
31-2856	KIT-SIDE PANEL	19.55
31-2857	KIT CONTROL PANEL OVERLAY	61.00
31-2858	KIT-CONTROL PANEL ADD ONS	51.00
OFFROAD CHALLENGER		
31-2461	CONTROL PANEL PLUS	38.85
31-2463	CABINET LEFT SIDE	81.65
31-2464	CABINET RIGHT SIDE	81.65
31-2465	PEDESTAL LEFT	29.95
31-2466	PEDESTAL RIGHT	29.95

DECALS CONTINUED

Part Number		Price per ea.
OFFROAD MUD, SWEAT 'N GEARS		
31-2460-1	UPPER SPEAKER	5.30
31-2460-2	UPPER SPEAKER	5.30
31-3419.1	SPEEDOMETER OVERLAY	14.40
31-3416	PEDESTAL, RIGHT	14.45
31-3423.1-1	INSTRUCTIONS	11.60
31-3423.1-2	TRICKS	11.60
ROADBURNERS		
31-3352.1	SIDE PANEL LEFT	64.10
31-3353.1	SIDE PANEL RIGHT	64.10
31-3356-1	UPPER FRAME - LEFT	10.25
31-3356-2	UPPER FRAME - RIGHT	10.25
31-3356-3	LOWER FRAME - LEFT	10.25
31-3356-4	LOWER FRAME - RIGHT	10.25
31-3357-1	WHEEL COVER - UPPER	4.30
31-3357-2	WHEEL COVER - CENTER	4.10
31-3357-3	WHEEL COVER - LOWER	4.30
31-3358-1	ENGINE - LEFT	7.70
31-3358-2	ENGINE - RIGHT	7.70
31-3360-1	SPEEDOMETER	7.70
31-3360-2	INSTRUMENT	7.70
SANFRANCISCO RUSH 2049		
31-3390.1	SIDE PANEL LEFT	67.15
31-3391.1	SIDE PANEL RIGHT	67.15
31-3398	DASH BOARD	22.65
31-3399-1	MONITOR COVER GAUGES	3.65
31-3399-2	MONITOR COVER ATARI	4.40
31-3399-3	MONITOR COVER KEY PAD	4.40
31-3401.1	SEAT BACK	36.30
SKINS GAME		
31-3457	BEZEL BOTTOM	10.25
31-3486	BEZEL TOP	11.20
31-3487	SIDE PANEL	12.60
31-3488	CONTROL PANEL OVERLAY	86.65
31-3489	ADD ONS	36.05
SURF PLANET		
31-3019	KIT SIDE PANEL	10.00
31-3021	KIT CONTROL PANEL ADD ONS	8.35
31-3022	BEZEL BOTTOM	4.50
VAPOR TRX		
31-3050.1-1	DASHBOARD LEFT	13.40
31-3050.1-2	DASHBOARD RIGHT	11.15
31-3051	GRILL SEAT TOP	21.40
31-3120-2	SEAT CUSHON RIGHT	3.90
31-3120-3	SEAT BOLT	3.90
WAR		
31-3173	BEZEL TOP	9.70
31-3178	KIT-SIDE PANEL	23.40
31-3179	KIT-CONTROL PANEL WALLPAPER	59.65
31-3180	KIT-CONTROL PANEL ADD ONS	38.85
31-3324.2	BUTTON OVERLAY	58.60
31-3361	BEZEL TOP - DEDICATED	7.85

© HAPP CONTROLS

DECALS - BLITZ

Part Number		Price per ea.
#44044 BLITZ - 25 CONVERSION KIT		
31-2864	BEZEL TOP	6.25
31-2869	KIT SIDE PANEL	27.70
31-2870	KIT CONTROL PANEL WALLPAPER	61.00
31-2871	KIT CONTROL PANEL ADD ONS	56.10
#44067 NBA - NBC CONVERSION KIT		
31-3204-1	CONTROL PANEL HOUSING LEFT	9.40
31-3204-2	CONTROL PANEL HOUSING RIGHT	6.90
31-3204-3	CONTROL PANEL HOUSING FRONT	9.40
31-1768	NBA HOLOGRAM	1.75
31-3206-2	BACKLIT MARQUEE UNIVERSAL	45.45
31-3207	BEZEL TOP	6.60
31-3208	BEZEL BOTTOM	6.60
31-3209	KIT SIDE	29.35
31-3210	KIT WALLPAPER	47.05
31-3211.1	KIT ADD ONS	59.80
#44081 BLITZ 99 25" CONVERSION KIT		
31-3126	INSTRUCTIONS - BEZEL TOP	4.75
31-3127	INSTRUCTIONS - BEZEL BOTTOM	4.75
31-3131	KIT SIDE PANEL	21.80
31-3130-1	KIT CONTROL PANEL LEFT	6.95
31-3130-3	KIT CONTROL PANEL FRONT	5.30
31-3132	KIT WALLPAPER	50.60
31-3133	KIT CONTROL PANEL ADD ONS	112.35
31-3125-2	BACKLIT MARQUEE UNIVERSAL	45.45
#44094 BLITZ 2000 GOLD - CONVERSION KIT		
31-3130-1	KIT CONTROL PANEL LEFT SIDE	6.95
31-3130-3	KIT CONTROL PANEL FRONT SIDE	5.30
31-3471	SIDE PANEL UNIVERSAL KIT	26.15
31-3481.1	CONTROL PANEL ADD ONS	51.75
31-3483	BEZEL INSTRUCTIONS TOP	40.30
31-3514-2	KIT-BACKLIT MARQUEE	43.25
#44367 NBA - NBC 25" - KIT		
31-3202.1	SIDE PANEL LEFT	82.15
31-3203.1	SIDE PANEL RIGHT	82.15
31-3204-1	CONTROL PANEL HOUSING LEFT	9.40
31-3204-2	CONTROL PANEL HOUSING RIGHT	6.90
31-3204-3	CONTROL PANEL HOUSING FRONT	9.40
31-3205.1	CONTROL PANEL OVERLAY	88.00
31-3206-2	BACKLIT MARQUEE UNIVERSAL	45.45
31-3207	BEZEL TOP	6.60
31-3208	BEZEL BOTTOM	6.60
#44381 BLITZ 25" KIT		
31-3125-2	BACKLIT MARQUEE UNIVERSAL	45.45
31-3130-1	KIT CONTROL PANEL LEFT	6.95
31-3130-3	KIT CONTROL PANEL FRONT	5.30
#45094 BLITZ 99/BLITZ 2K GOLD - DISC UPON UPGD KIT		
31-3472	BEZEL INSTRUCTIONS TOP	31.05
31-3473	BEZEL INSTRUCTIONS BOTTOM	31.05
31-3514-2	BACKLIT MARQUEE	43.25

DECALS - BLITZ CONTINUED

Part Number		Price per ea.
#45194 NBA/B99 - NBA/B2K GOLD - KIT		
31-3479-1	CONTROL PANEL HOUSING LEFT	11.30
31-3479-3	CONTROL PANEL HOUSING FRONT	11.30
31-3481.1	CONTROL PANEL ADD ONS	51.75
31-3482.1	CARDBOARD-HEADER CENTER-POP	43.65
31-3483	BEZEL INSTRUCTIONS TOP	40.30
31-3484	BEZEL INSTRUCTIONS BOTTOM	33.65
31-3515-2	BACKLIT MARQUEE	16.00
#45281 BLITZ 99 DISK KIT 2-4 PLYR UPG		
31-1768	NBA HOLGRAM	1.75
31-3206-2	BACKLIT MARQUEE UNIVERSAL	45.45
31-3207	BEZEL TOP	6.60
31-3208	BEZEL BOTTOM	6.60
31-3209	UNIVERSAL KIT SIDE	29.35
31-3429	CONTROL PANEL OVERLAY	124.55
31-3126	INSTRUCTIONS BEZEL TOP	4.75
31-3127	INSTRUCTIONS BEZEL BOTTOM	4.75
31-3125-2	BACKLIT MARQUEE UNIVERSAL	45.45
#45481 BLITZ 99 CONVERSION KIT W/CONTROL PANEL		
31-3126	INSTRUCTIONS BEZEL TOP	4.75
31-3127	INSTRUCTIONS BEZEL BOTTOM	4.75
31-3131	KIT SIDE PANEL	21.80
31-3125-2	BACKLIT MARQUEE UNIVERSAL	45.45
#45967 NBA/SHOWTIME BLITZ CONVERSION KIT		
31-3204-1	CONTROL PANEL HOUSING - DED LEFT	9.40
31-3204-2	CONTROL PANEL HOUSING - DED RIGHT	6.90
31-3204-3	CONTROL PANEL HOUSING - DED FRONT	9.40
31-1768	NBA HOLGRAM	1.75
31-3206-2	BACKLIT MARQUEE UNIVERSAL	45.45
31-3207	BEZEL TOP	6.60
31-3208	BEZEL BOTTOM	6.60
31-3209	UNIVERSAL KIT SIDE	29.35
31-3210	UNIVERSAL KIT WALLPAPER	47.05
31-3211.1	UNIVERSAL KIT ADD ONS	59.80
31-3429	CONTROL PANEL OVERLAY BLITZ99 TO NBA/NBC	124.55
31-3126	INSTRUCTIONS BEZEL TOP	4.75
31-3127	INSTRUCTIONS BEZEL BOTTOM	4.75
31-3132	KIT WALLPAPER	50.60
31-3133	KIT CONTROL PANEL ADD ONS	112.35
31-3125-2	BACKLIT MARQUEE UNIVERSAL	45.45
#40044 NFL BLITZ - VIDEO		
31-2864	BEZEL TOP	6.25
#40067 NBA ON NBC VIDEO		
31-3205.1	CONTROL PANEL OVERLAY NBA	88.00
31-1768	NBA HOLOGRAM	1.75
31-3204-1	CONTROL PANEL HOUSING LEFT	9.40
31-3204-2	CONTROL PANEL HOUSING RIGHT	6.90
31-3204-3	CONTROL PANEL HOUSING FRONT	9.40
31-3206-1	BACKLIT MARQUEE	45.45
31-3207	BEZEL TOP	6.60
31-3208	BEZEL BOTTOM	6.60

DECALS - BLITZ CONTINUED

Part Number		Price per ea.
#40081 NFL BLITZ 99 25" - VIDEO		
31-3125-1	BACKLIT MARQUEE	45.45
31-3126	INSTRUCTIONS BEZEL TOP	4.75
31-3127	INSTRUCTIONS BEZEL BOTTOM	4.75
#40084 NFL BLITZ 99 39" VIDEO		
31-3125-3	BACKLIT MARQUEE 39"	67.30
31-3164	BEZEL	33.15
31-3162	CONTROL PANEL OVERLAY	111.85
#40087 NBA ON NBA 39 " VIDEO		
31-3304.1	SIDE PANEL - LEFT NBA-NBC	132.50
31-3303.1	SIDE PANEL - RIGHT NBA-NBC	132.50
31-1768	NBA HOLOGRAM	1.75
31-3306	BACKLIT CONTROL PANEL MINI MARQUEE	45.45
#40094 BLITZ 2000/NBA SHOWTIME 25"		
31-3478.1	CONTROL PANEL OVERLAY	78.85
31-3479-1	CONTROL PANEL LEFT	11.30
31-3479-3	CONTROL PANEL FRONT	11.30
31-3491-1	SIDE PANEL LEFT	99.40
31-3492-1	SIDE PANEL RIGHT	119.25
31-3483	BEZEL INSTRUCTIONS TOP	40.30
31-3484	BEZEL INSTRUCTIONS BOTTOM	33.65
31-3515-1	BACKLIT MARQUEE SPORTS STATION	61.00

HARD DRIVES

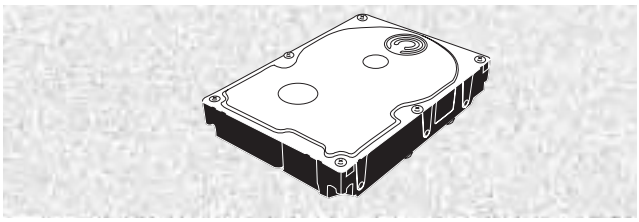

Part Number		Price per ea.
A-21715	AREA 51 W / EPROMS	203.00
A-22163	AREA 51	199.00
A-22509	AREA 51 SITE 4	199.00
A-22062	BLITZ	199.00
A-22550	BLITZ 99	199.00
A-23435	BLITZ 2000	199.00
A-23430	BLITZ 2K / NBA SHOWTIME	199.00
A-22080	CALIFORNIA SPEED	199.00
A-22331	CARNEVIL	199.00
A-23701	C.A.R.T. FURY	199.00
A-22402	GAUNTLET LEGENDS	199.00
A-23602	GAUNTLET DARK LEGACY	199.00
A-23221	HYDRO THUNDER	199.00
A-22130	HYPERDRIVE	199.00
A-21676	MAX FORCE	199.00
A-22095	MAX FORCE / AREA 51	199.00
A-22694-1	NBA ON NBC / BLITZ 99	199.00
A-23703	NBA ON NBC GOLD	199.00
A-23350	OFFROAD THUNDER	199.00
A-22829	ROAD BURNERS	199.00
A-22165	SAN FRANCISCO RUSH	199.00

HARD DRIVES CONTINUED

Part Number		Price per ea.
A-23195	SAN FRANCISCO RUSH 2049	199.00
A-21942	SAN FRANCISCO RUSH / ROCK	199.00
A-23453	SKINS	199.00
A-23344	TOUCHMASTER INFINITY	199.00
A-22117	VAPOR TRX	199.00
A-23228	WAR	199.00

JOYSTICKS

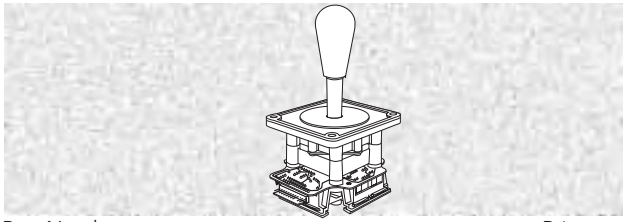

Part Number		Price per ea.
50-3100-00	49 WAY JOYSTICK ASSY (A-21939-1)	33.90
A-22318	ASSY, CONTROL - SURF PLANET	191.90
A-22389	ASSY, JOYSTICK SKINS	192.10
02-5364	TRIGGER SHAFT, ANALOG JOYSTICK	2.00
03-8409.1-1	TOP, 49 WAY JOYSTICK-NBA	2.55
03-8411.2-1	L-STOP, 49 WAY JOYSTICK	2.15
03-9941	MOLDED HANDLE L.H. ANALOG JOYSTICK	4.90
04-10849-1	49 WAY BLACK JOYSTICK HANDLE ASSY	10.20
04-11135	OPTO BOARD ASSY, 49 WAY JOYSTICK	46.40
04-12768	SWITCH ASSY TRIGGER, ANALOG JOYSTICK	5.90
10-538	RETURN SPRING HEAVY ANALOG JOYSTICK	3.05
20-9978-1	JOYSTICK, 8 WAY W / FLOAT, RED ACTU	22.40
20-9978-3	JOYSTICK: 8 WAY / BLUE / FLOAT ACT	22.40
A-23774	JOYSTICK, 49 WAT BASE - GRID	85.75
95-0990-00	JOYSTICK, 2 BUTTON HANDLE - GRID 20-10684.1	96.00
56-0110-11	TRACKBALL, LOWERED - GRID 20-10683	97.60

MANUALS

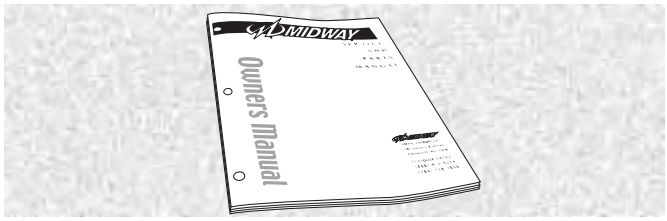

Part Number		Price per ea.
16-40089-101	MANUAL: ARCTIC THUNDER 27"	18.45
16-40096-101	MANUAL: ARCTIC THUNDER 39"	18.45
16-30027-101	MANUAL: AREA 51 - SITE 4	18.45
16-30039.1-101	MANUAL: AREA 51-SITE 4 39"	18.45
16-40094-101	MANUAL: BLITZ 2K/NBA SHOWTIME 25"	18.45
16-40098-101	MANUAL: BLITZ 2K/NBA SHOWTIME 39"	18.45
16-40081-101	MANUAL: BLITZ 99 25" DEDICATED	18.45
16-40084-101	MANUAL: BLITZ 99 39" DEDICATED	18.45
16-44081.1-101	MANUAL: BLITZ 99 CONVERSION KIT	18.45
16-40090-101	MANUAL: C.A.R.T. 27"	18.45
16-40095A.1-101	MANUAL: C.A.R.T.FURY 39" PRELM	18.45
16-30028-101	MANUAL: CALIFORNIA SPEED 31" & 25"	16.00
16-40086-101	MANUAL: CARNEVIL 39"	18.45
16-44069-101	MANUAL: CARNEVIL CONVERSION KIT	18.45

© HAPP CONTROLS

MANUALS CONTINUED

Part Number		Price per ea.
16-40069-101	MANUAL: CARNEVIL, US DBV READY	18.45
16-44094-101	MANUAL: CONV.KIT- BLITZ 2000	18.45
16-40072-101	MANUAL: CRUISIN EXOTICA	27.10
16-44072-101	MANUAL: CRUISN EXOTICA CONVERSION KIT	18.45
16-40076-101	MANUAL: CRUISN EXOTICA MOTION	18.45
16-40077-101	MANUAL: CRUISN WORLD 3 -39"	18.45
16-40033-101	MANUAL: CRUSIN USA MOTION	23.85
16-30040-101	MANUAL: GAUNTLET 3D 39"	18.45
16-30022.1-101	MANUAL: GAUNTLET 3D 27"	18.45
16-37946-101	MANUAL: GAUNTLET DARK LEGACY 27"	2.55
16-30046-101	MANUAL: GAUNTLET DARK LEGACY 27"	18.45
16-34046-101	MANUAL: GAUNTLET DARK LEGACY CONVERSION	8.50
16-34022-101	MANUAL: GAUNTLET UNIVERSAL KIT	18.45
16-30010-101	MANUAL: GRETZKY 3D HOCKEY DEDICATED	18.45
16-40091-101	MANUAL: GRID, THE 25" UPRIGHT	18.45
16-40091A.1-101	MANUAL: GRID, THE - PRELIMINARY	18.45
16-20033-101	MANUAL: HYDROTHUNDER	18.45
16-20038-101	MANUAL: HYDROTHUNDER 39"	18.45
16-40071-101	MANUAL: HYPERDRIVE	18.45
16-44068-101	MANUAL: INVASION CONVERSION KIT	18.45
16-30014-101	MANUAL: MACE 25" DEDICATED	18.45
16-30013-101	MANUAL: MAX FORCE 25"	18.45
16-30021-101	MANUAL: MAX FORCE 39"	18.45
16-60084-101	MANUAL: MEGA TOUCHMASTER 7000 COUNTERTOP	18.45
16-40039-101	MANUAL: MK3	18.45
16-40029-101	MANUAL: MORTAL KOMBAT 2	18.45
16-15109-101	MANUAL: NBA GOLD DIST UPGRADE KIT	2.55
16-40023-101-B	MANUAL: NBA JAM	18.45
16-40067.1-101	MANUAL: NBA ON NBC 25" DEDICATED	18.45
16-40087-101	MANUAL: NBA ON NBC 39"	18.45
16-15909-101	MANUAL: NBA SHOWTIME GOLD	18.45
16-15309-101	MANUAL: NBA SHOWTIME GOLD / SPORTS STATION KIT	2.55
16-45994-101	MANUAL: NBA TO BLITZ 2K CONVERT	18.45
16-45967.1-101	MANUAL: NBA TO NFL CHANGE OVER	18.45
16-20035-101	MANUAL: OFFROAD 3 27"	18.45
16-20041-101	MANUAL: OFFROAD 3 39"	18.45
16-20036-101	MANUAL: OFFROAD UPRIGHT	18.45
16-30038-101	MANUAL: RADIKAL BIKERS	18.45
16-30025.1-101	MANUAL: ROAD BURNERS 27"	18.45
16-30036-101	MANUAL: RUSH 2049 27"	18.45
16-3A948-101	MANUAL: RUSH 2049 MTN KIT	18.45
16-30031-101	MANUAL: RUSH THE ROCK	18.45
16-34031-101	MANUAL: SF RUSH 1.5 UPDATE KIT	18.45
16-34027-101	MANUAL: SITE 4 UNIVERSAL	18.45
16-30042-101	MANUAL: SKINS GAME	18.45
16-34042-101	MANUAL: SKINS GAME-UNIVERSAL KIT	8.50
16-3A942A-101	MANUAL: SKINS MTN KIT	18.45
16-34035-101	MANUAL: SURF PLANET CONV. KIT	18.45
16-80020-101	MANUAL: TOUCHMASTER 8000 COUNTERTOP	18.45
16-60050.3-101	MANUAL: TOUCHMASTER COUNTERTOP	18.45
16-60082.1-101	MANUAL: TOUCHMASTER COUNTERTOP	18.05

MANUALS CONTINUED

Part Number		Price per ea.
16-60050.1-101	MANUAL: TOUCHMASTER COUNTERTOP	18.05
16-60068-101	MANUAL: TOUCHMASTER INFINITY COUNTERTOP	18.45
16-60068.3-101	MANUAL: TOUCHMASTER INFINITY COUNTERTOP	18.45
16-60091-101	MANUAL: TOUCHMASTER INFINITY UPRIGHT	18.45
16-60083-101	MANUAL: TOUCHMASTER UPRIGHT	18.45
16-30024-101	MANUAL: VAPOR TRX	18.45
16-30037-101	MANUAL: WAR 25"	18.45
16-40052-101	MANUAL: WAR GODS	18.45
16-34037-101	MANUAL: WAR UNIVERSAL KIT	18.45

MARQUEES

Part Number		Price per ea.
31-3138-1	AREA 51 SITE 4 25"	45.45
31-3138-2	AREA 51 SITE 4 KIT	45.45
31-2863-1	BLITZ 25"	45.45
31-2863.1-3	BLITZ 25" KIT	45.45
31-3125-1	BLITZ 99 25"	45.45
31-3125-3	BLITZ 99 39"	67.30
31-3514-2	BLITZ 2000 KIT	43.25
31-3515-1	BLITZ 2K / NBA SPORTS STATION GOLD ED	61.00
31-3515-2	BLITZ 2K / NBA SPORTS STATION GOLD KIT	16.00
31-2904-1	CALIFORNIA SPEED LINK HEADER, DRIVER 3	52.90
31-2904-2	CALIFORNIA SPEED LINK HEADER, DRIVER 4	52.90
31-2987-1	CARNEVIL 25"	45.45
31-3277	CARNEVIL 39"	45.45
31-3524	C.A.R.T. FURY 27"	45.45
31-3536	C.A.R.T. FURY 39"	91.50
31-2005	CRUISN USA SIT DOWN	65.05
31-2303.1	CRUISN USA LINK LEFT	45.45
31-2437	CRUISN WORLD DRIVER 1	45.45
31-2438	CRUISN WORLD DRIVER 2	45.45
31-2445-5	CRUISN WORLD 31" UPRIGHT	28.95
31-2454-2	CRUISN LINK HEADER DRIVER #2	27.30
31-2455-1	CRUISN LINK HEADER DRIVER #3	27.30
31-2455-2	CRUISN LINK HEADER DRIVER #4	27.30
31-3373.2	CRUISN EXOTICA 27"	45.45
31-3151-1	GAUNTLET 27"	45.45
31-3269	GAUNTLET 39"	45.45
31-3270	GAUNTLET 39" MINI MARQUEE	25.25
31-3428	GAUNTLET KIT	45.45
31-3504	GAUNTLET DARK LEGACY 27"	45.45
31-3579-2	GAUNTLET DARK LEGACY KIT	45.45
31-3244.1	HYDRO THUNDER 25"	45.45
31-3311	HYDRO THUNDER 39"	45.45
31-3251	HYDRO THUNDER KINK HEADER CENTER BACK	112.70
31-3252.1	HYDRO THUNDER LINK HEADER CENTER FRONT	124.95
31-2963-1	HYPERDRIVE 25"	105.80
31-2972	HYPERDRIVE LINK HEADER CENTER FRONT	143.80
31-3328	HYPERDRIVE TO CAL SPEED KIT	45.45

MARQUEES CONTINUED

Part Number		Price per ea.
31-2671-2	MAX FORCE 25"	85.00
31-2703.1	MAX FORCE 39"	67.30
31-2937.1-2	MAX FORCE / AREA 51 KIT	45.45
31-2343	MORTAL KOMBAT 3	45.45
31-2720	MORTAL KOMBAT IV 39"	67.30
31-2850-3	MORTAL KOMBAT IV KIT	45.45
31-3206-1	NBA ON NBC 25"	45.45
31-3206-2	NBA ON NBC - KIT	45.45
31-3306	NBA ON NBC 39"	45.45
31-3586	NBA SHOWTIME GOLD	45.45
31-3125-2	NBA SHOWTIME / BLITZ CONV - KIT	45.45
31-2462.2-1	OFFROAD 25"	45.45
31-2915	OFFROAD LINK HEADER CENTER FRONT	64.65
31-2706-1	OFFROAD LINK HEADER DRIVER #1	45.45
31-2706-2	OFFROAD LINK HEADER DRIVER #2	45.45
31-2707-1	OFFROAD LINK HEADER DRIVER #3	45.45
31-2707-2	OFFROAD LINK HEADER DRIVER #4	45.45
31-2708	OFFROAD CABINET DRIVER #1	27.30
31-2709	OFFROAD CABINET DRIVER #2	27.30
31-2710	OFFROAD CABINET DRIVER #3	27.30
31-2711	OFFROAD CABINET DRIVER #4	27.30
31-3418.2	OFFROAD THUNDER 27"	45.45
31-3450.1	OFFROAD THUNDER 39"	67.30
31-3424.1	OFFROAD THUNDER LINK HEADER CENTER FRONT	64.65
31-3427-1	OFFROAD THUNDER LINK HEADER RACER - 3	45.45
31-3427-2	OFFROAD THUNDER LINK HEADER RACER - 4	45.45
31-3236-1	RADIKAL BIKER	45.45
31-3354	ROAD BURNERS 27"	
31-3395	SAN FRANCISCO RUSH 2049 27"	45.45
31-3396	SAN FRANCISCO RUSH 2049 27" LEADER	25.25
31-3456.3-2	SKINS KIT	45.45
31-3018	SURF PLANET	45.45
31-3630	TOUCHMASTER INFINITY 2 PAPER	5.00
31-3631	TOUCHMASTER INFINITY 2	45.45
31-3049-1	VAPOR TRX	45.45
31-3172.1-1	WAR 25"	45.45
31-3172.1-2	WAR KIT	45.45
31-3342	WAR LINK KIT	85.00

MONITORS

Part Number		Price per ea.
13" STANDARD RESOLUTION		
A-21526	CHASSIS & NECK ASSY 13"	374.55
A-04-10692.2	TOUCH SCREEN ASSY - TOUCHMASTER 13"	590.00
5677-15736-00	MONITOR 13" W/T SCREEN 85-265v	1,174.30
19" STANDARD RESOLUTION		
19" STANDARD RESOLUTION		
A-22523	TOUCH SCREEN ASSY - TOUCHMASTER 19"	621.85

MONITORS - CONTINUED

Part Number		Price per ea.
25" STANDARD RESOLUTION		
5675-15215-PN	MONITOR 25", STD. RES.-NEOTEC	771.15
04-10928	NEOTEC 25" CHASSIS Nt-2515c	444.90
5675-15215-PW	MONITOR 25", STD. RES.-WELLS	810.15
25" MEDIUM RESOLUTION		
5675-15328-PN	MONITOR 25", MED.RES.-NEOTEC	899.20
04-10882-R	NEOTEC Nt-25e CHASSIS 25" MED	378.25
5675-15329-PW	MONITOR 25", MED.RES.-WELLS	794.25
A-22430	WELLS 25" CHASSIS U5000	363.15
28" MEDIUM RESOLUTION		
04-10885	NEOTEC Nt-28E CHASSIS 28" MED	495.85
5675-15355-PW	MONITOR 28". MED. RES.-WELS	1,050.45
31" MEDIUM RESOLUTION		
31" MEDIUM RESOLUTION		
5675-14845-PN	MONITOR 31", MED. RES.-NEOTEC	2,042.00

MOTORS

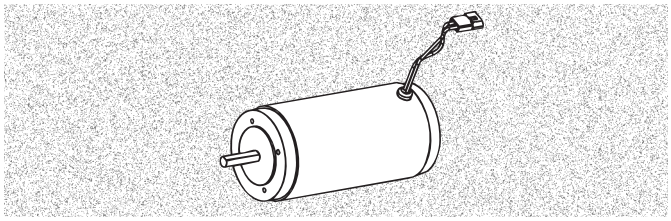

Part Number		Price per ea.
50-4043-00	# 14-8029, CRUIS'N USA, CRUIS'N WORLD, CODE ONE, CRUIS'N	153.00
50-4013-00	# 14-8039. RUSH 2049, HYDROTHUNDER, ARCTIC THUNDER, EXOTICA, CALIFORNIA SPEED	132.55

OPTICAL GUNS

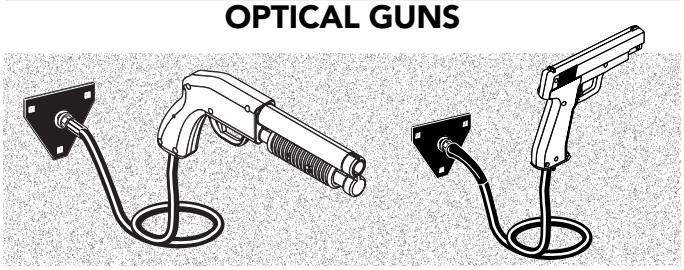

Part Number		Price per ea.
CARNEVIL		
A-22313	HOLSTER ASSY - CARNEVIL	43.35
A-22357-1	CARNEVIL GUN ASSEMBLY, LEFT, PURPLE	162.20
03-9738.2-1	GUN HOUSING LEFT, PURPLE	16.30
03-9739.2-1	GUN HOUSING RIGHT, PURPLE	16.30
03-9741.2-4	PUMP HOUSING, LEFT, GREEN	2.40
03-9742.2-4	PUMP HOUSING, RIGHT, GREEN	2.40
96-0301-00	TRIGGER, BLACK, 03-9740.2-3	10.30
96-0299-00	CAP, BLACK	9.35
04-12388.2	GUN PCB ASSEMBLY	40.30
10-535	GUN TRIGGER SPRING	.98
96-0308-00	GUN PUMP SPRING, 10-529	1.85
96-0068-00	GUN LENS, 20-10426	18.15

© HAPP CONTROLS

OPTICAL GUNS - CONTINUED

A-22358-I	CARNEVIL GUN ASSEMBLY, RIGHT, PURPLE	162.20
03-9738.2-2	GUN HOUSING LEFT, GREEN	16.30
03-9739.2-2	GUN HOUSING RIGHT, GREEN	16.30
03-9741.2-3	PUMP HOUSING, LEFT, PURPLE	2.40
03-9742.2-3	PUMP HOUSING, RIGHT, PURPLE	2.40
96-0301-00	TRIGGER, BLACK, 03-9740.2-3	10.30
96-0299-00	CAP, BLACK, 03-9743.1-2	9.35
04-12388.2	GUN PCB ASSEMBLY	40.30
10-535	GUN TRIGGER SPRING	.98
10-529	GUN PUMP SPRING	2.30

SITE 4/INVASION

04-11243	OPTICAL GUN - SITE 4/INVASION	207.60
03-9781	PISTOL, RIGHT HALF, PURPLE	18.35
03-9782	PISTOL, LEFT HALF, PURPLE	18.35
04-11282	OPTICAL GUN PCB	52.10

PEDALS

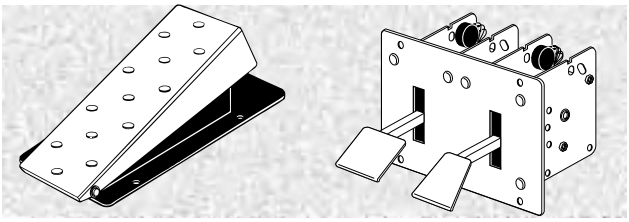

Part Number		Price per ea.
50-8194-03	PEDAL ASSY - CRUSN/OFFRD UPRIGHT, 20-10161	66.30
04-10983	GAS PEDAL - CRUIS'N, SAN FRANCISCO RUSH	10.60
04-10984	BRAKE & CLUTCH: PEDAL SAN FRANCISCO RUSH / CRUIS'N	10.60
20-10647	BRAKE LEVER, HANDLE BAR ROAD BURNERS	7.75
23-6741	FLOOR MAT, RUBBER, CRUIS'N USA, CRUIS'N WORLD, OFFROAD CHALLENGE	12.65
01-15262	FLOOR MAT TREAD PLATE EXOTICA	23.25
50-2978-00	DUAL PEDAL CALIFORNIA SPEED, C.A.R.T. FURY, CRUIS'N USA, CRUIS'N EXOTICA, CRUIS'N WORLD AND OFFROAD THUNDER, 20-10135	200.00
50-8595-00	TRIPLE PEDAL RUSH & RUSH 2049, 20-10356	234.95

DO YOU WANT TO KNOW EACH TIME YOUR ORDER SHIPS OUT?

e-mail notification and order **tracking information** is now available from Happ Controls! Contact your sales representative or e-mail our customer service department at: **info@happcontrols.com** with your account information.

POTENTIOMETERS

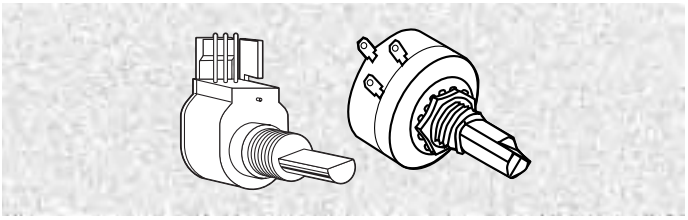

Part Number		Price per ea.
50-8056-00	POTENTIOMETER, LONG LIFE, 5K Ohm, 119008-1001	19.35
119018-001	POTENTIOMETER, 10K Ohm, 10 TURN	71.00
5014-12925-00	POTENTIOMETER TAPE AUDIO, 50K REV	3.65
50-2670-00	POTENTIOMETER - RADIKAL BIKER, 5014-16301-00	22.95
50-2670-00	5K NEI POT ROAD BURNERS H/BAR, 5014-16383-00	22.95
50-3127-00	1K POTENTIOMETER ROAD BURNERS PIVOT MECH, 5014-16384-00	26.65
96-4916-00	POTENTIOMETER EXOTICA, 20-10186	37.45

SEATS

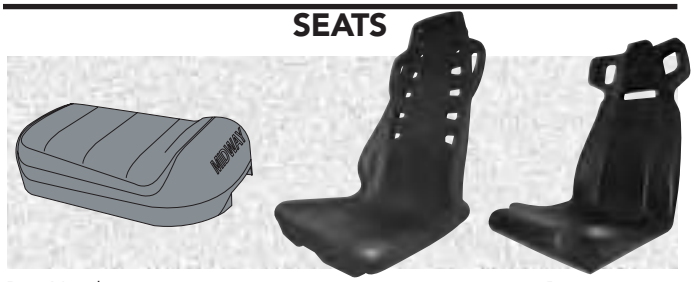

Part Number		Price per ea.
04-10173	MOLDED BLACK - CRUISN WORLD, OFFROAD CHALLENGE	169.15
04-10173-1	MOLDED BLUE - CALIFORNIA SPEED	172.90
04-10630	MOLDED GREEN - SAN FRANCISCO RUSH & ROCK	176.55
04-11100	MOLDED TEAL - HYDRO THUNDER	176.55
04-12452-3	MOLDED PURPLE - CRUIS'N EXOTICA	176.55
04-12452-4	MOLDED BLACK – CRUIS'N	176.55
04-12452-5	MOLDED RED – CRUIS'N	176.55
04-12674	MOLDED BLACK - RUSH 2049	176.55
04-12674-1	MOLDED BLACK - C.A.R.T. FURY	176.55
04-12674-2	MOLDED RED – C.A.R.T. FURY	176.55
04-12731	MOLDED YELLOW - OFFROAD THUNDER	176.55
04-12950	SEAT, ARCTIC THUNDER	280.95
04-12453.2	SLIDE ASSY - CRUIS'N EXOTICA	232.50
A-23518	SEAT WITH SLIDE ASSEMBLY EXOTICA	670.35
A-19534	MOUNTING PLATE CRUIS'N USA	78.90

SEE OUR EXPANDED SEAT SECTION ON PAGES 296-301

MIDWAY

SHIFTERS

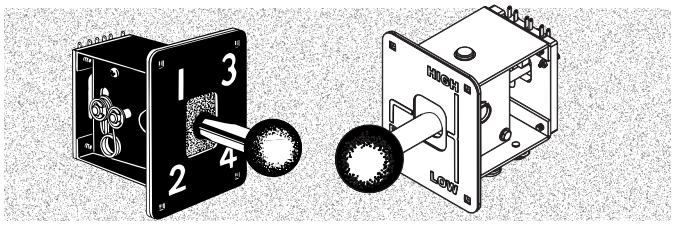

Part Number		Price per ea.
A-22572	THROTTLE ASSEMBLY HYDRO THUNDER	390.15
50-8496-00	4-SPEED SHIFTER CRUIS'N USA, 20-10141	120.55
50-2060-90	4-SPEED SHIFTER OFFROAD & CALIFORNIA SPEED, 20-10253.1	108.50
50-2060-00	4-SPEED SHIFTER CRUIS'N WORLD, 20-10267.1	108.50
50-8496-01	4-SPEED SHIFTER RUSH SERIES, 20-10369	120.55
50-3083-00	4-SPEED SHIFTER CRUIS'N EXOTICA, 20-10495	72.35
50-8516-00	4-SPEED SHIFTER C.A.R.T. FURY, 20-10656.1	84.45

SPEAKERS

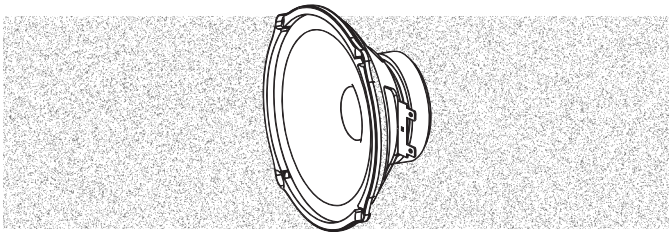

Part Number		Price per ea.
5555-15098-00	SPEAKER, DASH CRUIS'N WORLD, OFFROAD CHALLENGE	21.45
5555-12856-00	SPEAKER, DASH CRUIS'N USA	10.30
5555-16059-00	SPEAKER, DASH CHALLENGE	16.65
5555-12929-00	SPEAKER, CAB, CRUIS'N USA, CRUIS'N WORLD, OFFROAD CHALLENGE	11.40
5555-15098-00	SPEAKER, CAB EXOTICA	21.45
5555-16223-00	SPEAKER EXOTICA	1.60

STEERING WHEELS

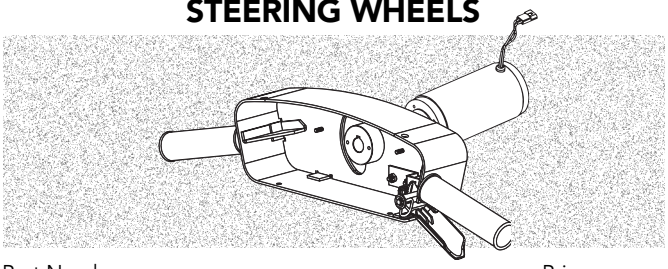

Part Number		Price per ea.
95-1219-00	HANDLEBAR ASSEMBLY ARCTIC THUNDER, 04-13047.2	234.10
50-8593-00	MOTORIZED STEERING SUB ASSEMBLY (NO HOOP, CAP OR HUB), CRUIS'N USA & WORLD, 20-10134	481.80
50-8593-95R	MOTORIZED STEERING SUB ASSEMBLY (NO HOOP, CAP OR HUB), CALIFORNIA SPEED, 20-10401-1	391.55
50-8593-93	MOTORIZED STEERING SUB ASSEMBLY (NO HOOP, CAP OR HUB), HYDRO THUNDER, 20-10519	234.10
50-8593-50	MOTORIZED STEERING SUB ASSEMBLY (NO HOOP, CAP OR HUB), CRUIS'N EXOTICA, OFFROAD THUNDER AND RUSH SERIES 20-10627	228.90
95-0999-00	MOTORIZED STEERING SUB ASSEMBLY ARTIC THUNDER, 20-10688	395.85
50-8593-60	MOTORIZED STEERING SUB ASSEMBLY (NO HOOP, CAP OR HUB), C.A.R.T. FURY 20-10713	218.00

MISCELLANEOUS

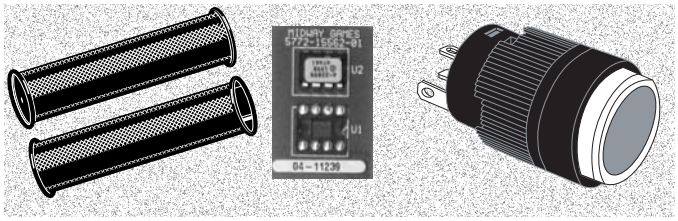

Part Number		Price per ea.
95-1457-00	ARCTIC THUNDER GRIPS	5.20
04-11239	SECURITY BOARD FOR AREA 51/ MAX FORCE COMBO	46.85
5641-12864-00	ROCKET PUSH BUTTON SWITCH FOR TERMINATOR II GUN	37.80
04-12770.1	PCB ASSY. UNIV. WHEEL DRIVER	349.20

NAMCO

NAMCO FINAL FURLONG HORSE HEAD

- New updated design
- Smaller non-breakable ears
- Color molded eyes, no decals required
- Made from thermo-plastic elastomer
- Available in brown or gray
- Made in the USA

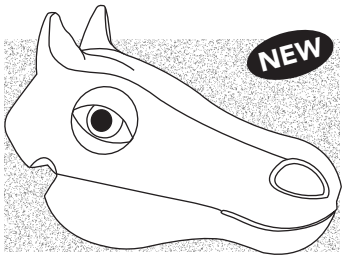

Part Number		Price per ea.
FF90-06774-00	Final Furlong Horse Head-Brown	262.50
FF90-06774-01	Final Furlong Horse Head-Gray	262.50

NAMCO FINAL FURLONG SADDLE

- Improved Urethane body for longer durability
- Filled foam center for player comfort
- Plywood bottom
- Made in the USA

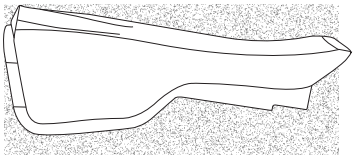

Part Number		Price per ea.
FF90-06642-00	Final Furlong Saddle	236.25

NAMCO GUN LENS

- Original NAMCO lens
- Used on Time Crisis I, Time Crisis II and Point Blank

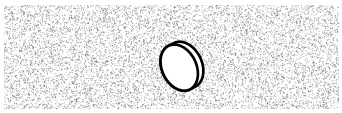

Part Number		Price per ea.
PB09-296-426	Namco Gun Lens	42.65

© HAPP CONTROLS

NAMCO CYBERCYCLE SEAT

- Black Plastic
- New ribbed design for added strength
- Original OEM replacement
- Made in USA

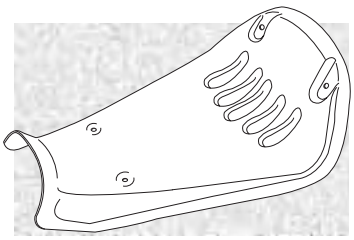

Part Number		Price per ea.
CY90-03760-00	Cybercycle Seat	103.85

NAMCO TACH COVER

- Used on NAMCO Cybercycles
- New and improved durable steel reinforced design
- Made in USA

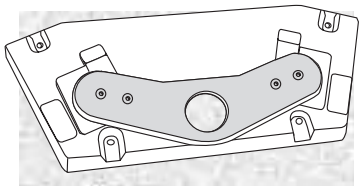

Part Number		Price per ea.
CY90-03761-001	Tach Cover	157.50

MS PAC-MAN MARQUEE

- Silk screen on plexiglass
- New Reproduction
- Officially Licensed Graphics

Part Number		Price per ea.
49-8005-00	Ms. Pac-Man Marquee	113.10

MS PAC-MAN COCKTAIL TABLE UNDERLAY

- 22" x 32" Styrene plastic
- Mounts under top glass on cocktail tables
- New reproduction of original
- Official Licensed Graphics

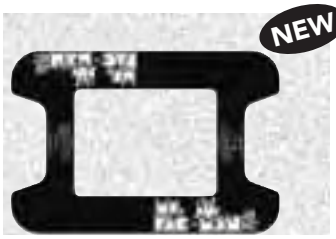

Part Number		Price per ea.
49-8006-00	Ms. Pac-Man Cocktail Table Underlay	67.65

REPLACEMENT BRAKE LEVER

- Namco ref. # 22946016-00
- Used on Atari Superbike, Namco Cybercycle and Motocross Go
- Color: black

Part Number		Price per ea.
95-0448-00	Replacement Brake Lever	6.30

FINAL FURLONG REIGN FRAME

- New style with updated durable design to last longer
- Metal push button housing with steel reinforced plate to support graphic panel
- Durable round steel whip buttons
- Thicker .093" steel tube
- Better welds and stronger .129" thick mounting brackets
- Fully harnessed and ready to plug in
- Made in USA

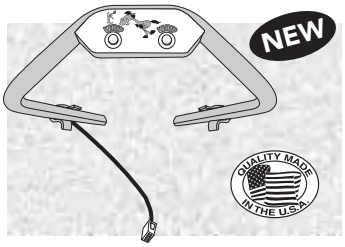

Part Number		Price per ea.
FF05-06721-00	Final Furlong Reign Frame	299.99

REPLACEMENT ALPINE RACER STEP COVERS

- Replaces the original NAMCO plastic step covers: AP90-04096-00 & AP90-04095-00
- Made of durable stainless steel for increased life
- Easy to install, simply remove old covers and install the new attractive stainless steel covers
- Sold as a set
- Made in USA

Part Number		Price per set
95-2042-00	Replacement Alpine Racer Stop Covers	199.00

MS PAC-MAN COCKTAIL TABLE OVERLAY

- Peel & Stick Overlay
- Set of two
- Officially licensed graphics

Part Number		Price per ea.
49-8004-00	Ms. Pac-Man Cocktail Table Overlay	150.75

REPLACEMENT AMPLIFIED OPTIC SENSOR PCB FOR NAMCO RECOIL GUNS

- This unique amplified optic sensor circuit provides improved performance over the original version
- Amplification circuit allows game to function with older monitors that may have lost brightness due to age
- Replaces Namco sensor part number PB09-296-467
- Utilizes same optic sensor as standard Happ Controls guns L14G1
- For use in Time Crisis I, II, III, and Point Blank
- Made in USA

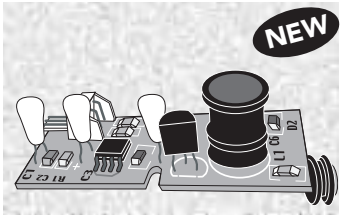

Part Number		Price per ea.
95-0448-00	Replacement Amplified Optic Sensor CB for Namco Recoil Guns	6.30

NAMCO

METAL NOSE GUARD FOR NAMCO RECOIL GUNS

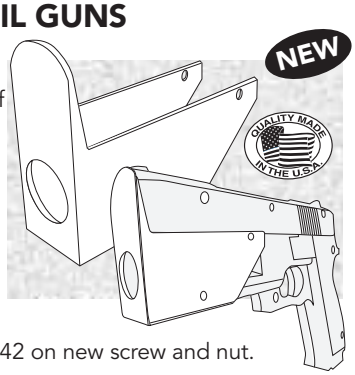

- Stop replacing those broken gun halves
- Protect and extend the life of your plastic gun halves by simply installing this durable stainless steel nose guard
- Comes with longer screw and nut required for installation
- For use in Time Crisis I, II, III, and Point Blank
- Recommend use of Loctite 242 on new screw and nut.
- Made in USA

Part Number		Price per ea.
96-0453-00	Metal Nose Guard for Namco Recoil Guns	27.50

REPLACEMENT SOLENOID ASSEMBLY FOR NAMCO RECOIL GUNS

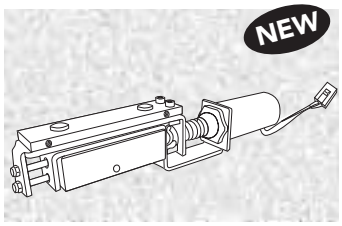

- This robust design will virtually eliminate service calls related to solenoid failure
- Slight modification of original gun halves required and the new unit simply fits into place
- 24vdc solenoid plug compatible
- For use in Time Crisis I, II, III, and Point Blank
- Made in USA

Part Number		Price per ea.
96-0452-00	Replacement Solenoid Assembly for Namco Recoil Guns	153.00

NAMCO REPLACEMENT PARTS

Part Number	Namco Part Number	Description	Price per ea.
CZ-37-09328-00	CZ-37-09328-00	CCD Camera Assembly	320.15
694-990	694-990	Gun Half Left for Crisis Zone	123.50
694-991	694-991	Gun Half Right for Crisis Zone	123.50
CZ030955100	CZ030955100	Gun Sensor Board for Crisis Zone Deluxe	324.95
659-882	659-882	V221 Tube DX-EXP w/harnes f/Crisis Zone	180.10
50-2611-00	MX10-0809-00	Throttle Spring for Motocross	1.30
50-2624-00	MX96-07982-00	Timing Belt 522 x 3m x 15 for Motocross	20.50
50-2636-00	MX10-07171-01	Right Hold Plate for Motocross	16.95
50-2637-00	MX10-07171-00	Left Hold Plate for Motocross	16.95
95-0424-00	24305015-00	Cybercycle Throttle Spring	1.75
95-0431-00	CY10-04139-00	Handlebar Brake Spring	1.75
NAM-CCO9259340	NAM-CCO9259340	Eye & Mouth Decal Crazy Crab - 1 set	30.55
96-0454-00	PB09-296-467	Sensor for Time Crisis PCB	30.60
SG09-008-006	SG09-008-006	5K Potentiometer	50.95
VG75-03824-00	VG75-03824-00	1K Potentiometer 60 Degree	43.75
VG75-05464-00	VG75-05464-00	1K Potentiometer 40 Degree	45.25

Sammy

SHOTGUN FOR SAMMY DEER HUNTER

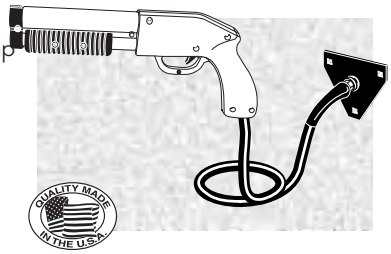

- Original OEM replacement
- Orange gun with black pump action handle
- Overall length 14"
- Durable rubber hose
- Made in the USA

Part Number		Price per ea.
96-0300-00	Sammy Deer Hunter Shotgun	189.00

BARREL HOLSTER FOR 14" SAMMY SHOTGUN

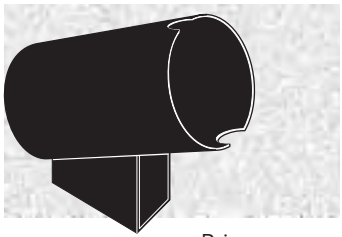

- Made of heavy duty black powder coated steel
- Bolts to the front of the cabinet
- Requires drilling three holes in the cabinet
- Holster and mounting hardware included

Part Number		Price per ea.
36-50-303	Barrel Holster for 14" Sammy Shotgun	34.70

© HAPP CONTROLS

SAMMY USA SECURITY BAR KIT

Sammy

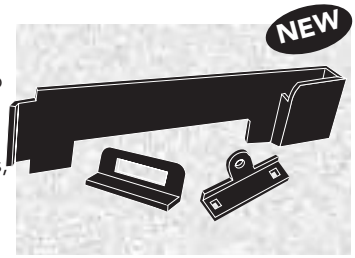

- Direct fit for Sammy Wing Shooting Championship
- Wing Shooting Championship cabinets are pre-drilled for easy installation
- Installs in less than 10 minutes, simply remove the supplied bolts and install the two brackets
- Heavy duty black painted metal
- May also be used on Sammy 25" Upright and 33" Showcase cabinets with Deer Hunting USA, Turkey Hunting USA, (hardware for these cabinets must be purchased separately)
- Kit includes: Locking bar with enclosed padlock area, and 2 mounting brackets
- Made in USA

Part Number		Price per ea.
30-0200-00	Sammy USA Security Bar Kit	54.99

SAMMY SCOPE GUN

- Original OEM gun for American Sammy Sport Shooting game for ATOMISWAVE game system.
- Clear gun with red LED laser sight
- Durable rubber hose assembly
- Reliable optic PCB has innovative optic can holder that securely holds the optic in place and prevents breakage of optic legs
- Made in USA

Part Number		Price per ea.
53-50-320	Sammy Scope Gun	192.80

NOTE: See optical gun section for detailed views.

SAMMY USA SECURITY BAR KIT

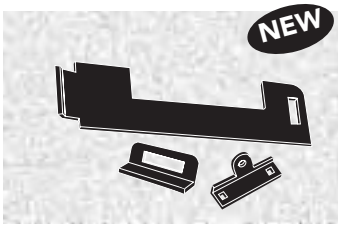

- Direct fit for Sports Arena
- Installs in less than 10 minutes
- Heavy duty black painted metal
- Kit includes: Locking bar, and 2 mounting brackets
- Made in USA

Part Number		Price per ea.
30-0200-01	Sammy Scope Gun	54.99

27" PUMP ACTION SHOTGUN

- Made in USA
- Original OEM shotgun from American Sammy
- For use on the following American Sammy games:
  - Wing Shooting Championship
  - Turkey Hunting USA
  - Deer Hunting USA
- New optic PCB has innovative optic can holder that securely holds the optic in place and prevents breakage of optic legs due to shock
- Durable rubber hose, 57" length
- Reliable GOLD contact microswitch used for the trigger switch
- Color: Orange
- Slide action pump gives realistic feel
- Easier disassembly and assembly of gun via brass inserts inside gun, no nuts
- Holster clip set (sold separately) 95-50-303

Part Number		Price per ea.
99-50-310	27" Pump Action Shotgun	196.70

HOLSTER SET FOR 27" SAMMY SHOTGUN

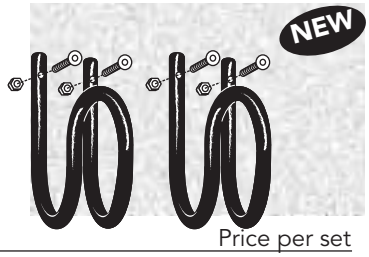

- Set contains two heavy duty metal clips
- Black powder coated
- All mounting hardware included
- Requires drilling of four holes

Part Number		Price per set
99-50-303	Holster Set for 27"Sammy Shotgun	25.45

REPLACEMENT BULBS FOR SPORTS ARENA

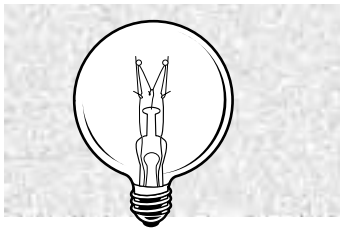

- Keep your games earning potential to it's maximum by replacing those burned out bulbs
- Each machine contains 57 Bulbs (6 Red, 51 Clear)
- Available in both Clear or Red bulbs
- 24 volts, 5 Watts

Part Number		Price per ea.
91-0051-00	Sports Arena Replacement Bulb, Clear	1.90
91-0050-00	Sports Arena Replacement Bulb, Red	2.05

SEGA

REPLACEMENT HOSE FOR SEGA GUN TYPE I

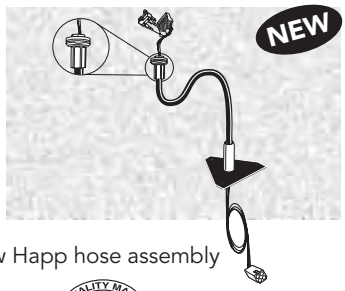

- Special design provides increased durability over the original Sega Type I gun hose assembly
- Includes hose, harness and black triangle mounting plate
- Easy to install, simply remove the original assembly and install the new Happ hose assembly
- Made in USA

Part Number		Price per ea.
95-1595-00	Sega Type I Gun Hose Assembly	135.20

REPLACEMENT HOSE FOR SEGA GUN TYPE II

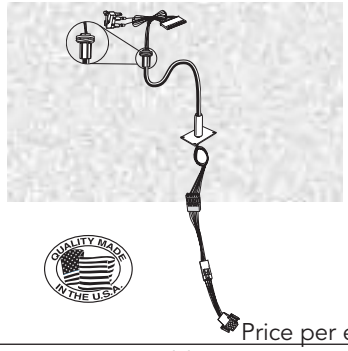

- Special design provides increased durability over the original Sega Type II gun hose assembly
- Includes hose, harness and rectangular mounting plate
- Easy to install, simply remove the original assembly and install the new Happ hose assembly
- Made in USA

Part Number		Price per ea.
95-1600-00	Sega Type II Gun Hose Assembly	135.20

SEGA

LED GUN SENSOR BOARD FOR SEGA GAMES

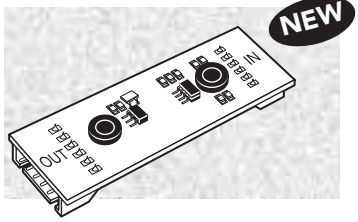

- This sensor board is used games around the monitor to sense the gun position in Sega
- Used on the following games: Lost World & House of Dead 2
- 12 per game

Part Number		Price per ea.
838-13145	LED Gun Sensor Board for Sega Games	74.60

REPLACEMENT 5K POT FOR SEGA GAMES

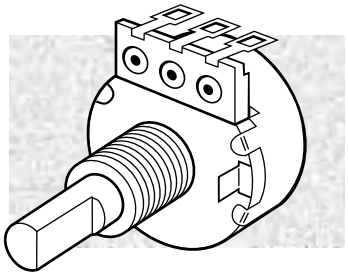

- Longer life design
- 1,000,000 cycle life
- Same as 220-5484 or 220-5374

Part Number		Price per ea.
220-5373	Replacement 5k Pot for Sega Games	21.90

REPLACEMENT 2-PIECE STEERING SHAFT FOR SEGA

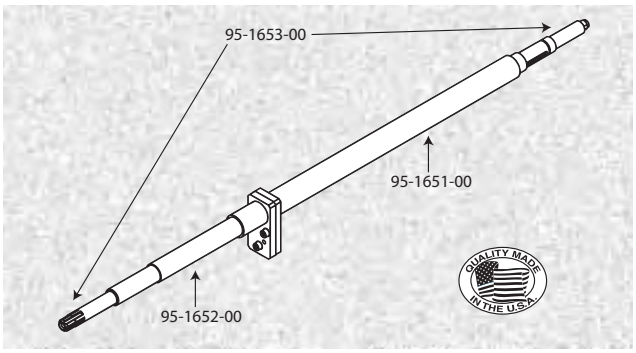

- Used on Sega Daytona II Deluxe & Sega Super GT Deluxe
- Spline shaft on front for attaching steering wheel
- Unique 2-piece design allows the future ability to replace only the front (95-1652-00) or rear (95-1651-00) shaft
- Made in USA

Part Number		Price per ea.
95-1653-00	Two-Piece Steering Rod Assembly	136.60
95-1652-00	Front Shaft for Steering Assembly	72.85
95-1651-00	Rear Shaft for Steering Assembly	72.85

SHUFFLE ALLEY

BOWLING PIN FOR WILLIAMS SHUFFLE ALLEY

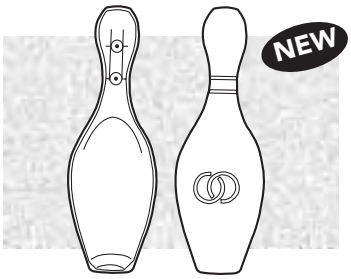

- Replacement for Williams or United shuffle alley
- White plastic with red imprinting
- Overall length: 10"
- Mounting hole centers: 1.84"
- Made in USA

Part Number		Price per ea.
31-1445.1	Bowling Pin for Williams or United Shuffle Alley	5.10

SHUFFLE ALLEY REBOUND RUBBER

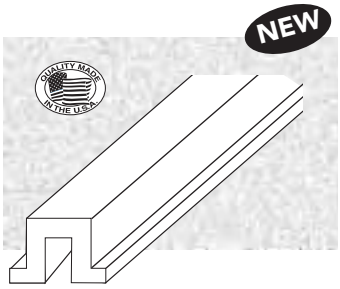

- Will work on Williams Shuffle Alleys
- Williams Ref # 23-6456
- Black Rubber
- Length: 22.13"
- Made in USA

Part Number		Price per ea.
25-2001-00	Shuffle Alley Rebound Rubber	14.25

BOWLING PIN FOR CHICAGO COIN

- Made from low density plastic
- Overall length: 10"
- Mounting hole centers: 1.42"
- White plastic with red imprinting
- Made in USA

Part Number		Price per ea.
51-0306-00	Bowling Pin for Chicago Coin	8.15

SHUFFLE ALLEY SIDE RUBBER

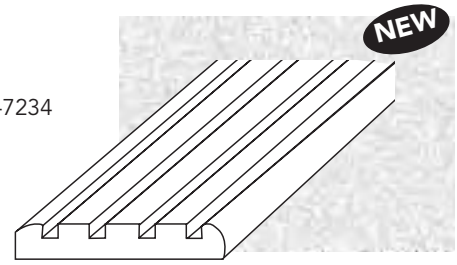

- Adhesive backed
- 93.5" long
- Williams Ref # 03-7234
- Black rubber
- Made in USA

Part Number		Price per ea.
25-2002-00	Shuffle Alley Side Rubber	11.20

© HAPP CONTROLS

SHUFFLE ALLEY ROLLOVER WIRE

NEW

- Williams B-7752-L (Left)
- Williams B-7752-R (Right)

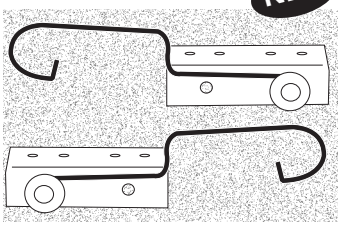

Part Number		Price per ea.
B-7752L	Shuffle Alley Rollover Wire-Left	6.65
B-7752R	Shuffle Alley Rollover Wire-Right	6.65

EXTRA LARGE BOWLER PUCK

- 2-7/8"
- Rounded playing edge
- Red insert
- Bright chrome finish
- For use on bowling game

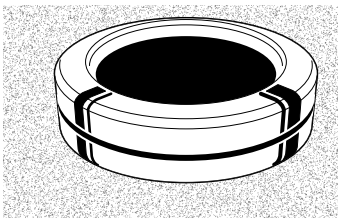

Part Number		Price per ea.	L/12
260001	Extra Large Bowler Puck	8.25	7.95

SHUFFLEBOARD PUCKS

- Heavy Chrome plated steel
- Plastic-topped caps
- High quality
- Set of 8 (4 Red / 4 Blue)
- Balanced for better feel and control

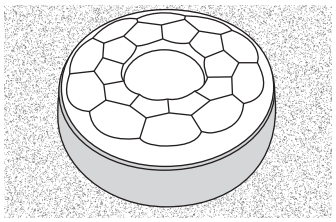

Part Number		Price per ea.
26-1138-00	American Made Shuffleboard Pucks	152.75
26-1450-00	Economy Shuffleboard Pucks	60.30

ORANGE SHUFFLE PUCK

- Used on Interactive Light Slide-It game
- Made from Delrin material

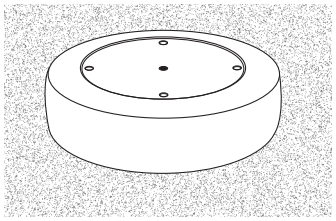

Part Number		Price per ea.
26-1520-00	Orange Shuffle Puck	9.05

METAL COVER FOR WILLIAMS SHUFFLE ALLEY

NEW

- Williams ref# 01-8065
- Mounting holes are pre-drilled
- 24" L x 6" D
- Made in USA

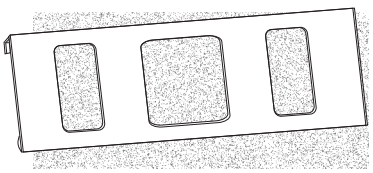

Part Number		Price per ea.
01-8065	Metal Cover for Williams Shuffle Alley	30.55

BOWLING PIN RESET LEVER

- Williams ref. # 03-7202
- Durable nylon

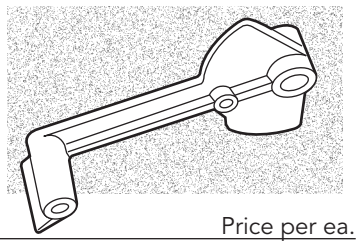

Part Number		Price per ea.
26-1475-00	Bowling Pin Reset Lever	3.05

HIGH BOWLER NUMBERED CARDS

- Used to list players scores and rankings
- Winning number under gold "scratch-off" seal
- 100 or 200 names per card

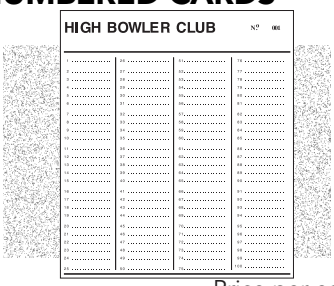

Part Number		Price per ea.
27-1112-100	100 Names	1.30
27-1112-00	200 Names	1.30

MILLS PINBALL PLAYFIELD WAX & CLEANER

- Excellent one step playfield wax and cleaner
- Great cleaner for rubber rings
- Non-abrasive
- 16 oz. squeeze bottle
- 12 per case

Part Number		Price per ea.
29-1040-00	Mills Pinball Playfield Wax & Cleaner	8.45

WILDCAT #125 PLAYFIELD CLEANER & POLISH

- Excellent in cleaning pinball playfields
- Excellent for removing and cleaning up wax buildup in vending machines "price tab holders"
- New style bottle prevents evaporation
- 12 per case

Part Number		Price per ea.
25-1332-00	Cleaner & Polish (Quart Size)	16.95
25-1333-00	Cleaner & Polish (Half Size)	10.90

SUN-GLO, SHUFFLEBOARD WAX

Listed In Order of Speed

SUPER-GLIDE SHUFFLEBOARD WAX

- Best shuffleboard wax anywhere
- Fastest wax from Sun-Glo®
- Pure silicone ball bearings
- Shaker top allows even dispensing
- 1 lb. Cans
- 24 per case

TOURNAMENT GOLD SHUFFLEBOARD WAX

- Approved by champions
- Extremely fast, but still allows intensive control
- High-Quality wax created especially for tournament play
- Not for dance floors
- Easy pour top allows even dispensing
- Second fastest Sun-Glo® wax
- 1 lb. Cans
- 24 per case

BROWN BEAR SHUFFLEBOARD WAX

- Another best seller of Sun-Glo® products
- Third fast wax from Sun-Glo®
- Perfect for a fast game with solid control
- Shaker top allows even dispensing
- 1 lb. Cans
- 12 per case

5-STAR SHUFFLEBOARD WAX

- A traditional favorite of shuffleboard players
- Slower formula allows more control
- Shaker top allows even dispensing
- Fifth fastest wax from Sun-Glo®
- 1 lb. can
- 12 per case

BOWLER SHUFFLE ALLEY WAX

- Provides a waxed surface without high speed
- Designed for older bowling shuffle alley games
- Shaker top allows even dispensing
- Contains no silicone balls
- Slowest wax in the line-up
- 1 lb. Cans
- 24 per case

MASTER GLAZE LIQUID WAX

- First step to revitalize the shuffleboard
- Creamy rich liquid polishes to a high glaze
- Apply first, then maintain with other Sun-Glo® waxes
- Quart size cans
- 12 per case

SILICONE SPRAY

- Specifically designed for Shuffleboard games
- Fast drying, leaves no greasy or oily film
- Simply spray a light film on a clean surface, then reapply powder for a fast shuffleboard
- Eliminates tracking and saves powder
- 12 oz. net wt.
- 12 per case

Part Number		Price per ea.	Full Case
49-0469-00	Super-Glide Shuffleboard Wax, 24 per case	4.70	4.10
29-0269-00	Tournament Gold Shuffleboard Wax, 24 per case	5.10	4.60
49-0482-00	Brown Bear Shuffleboard Wax, 12 per case	5.45	4.95
29-1020-00	5-Star Shuffleboard Wax, 12 per case	4.05	3.75
29-1057-00	Shuffle Alley and Bowler Wax, 24 per case	4.20	3.95
29-1034-00	Master Glaze Liquid Wax, 12 per case	12.05	10.90
29-1089-00	Silicone Spray, 12 per case	8.55	8.15

MISCELLANEOUS PARTS

SPIDER STOMPIN FOOT PLAYFIELD PLEXI

NEW

- Replaces original Island Design playfield plexi
- Clear anti-slip surface
- Made in USA

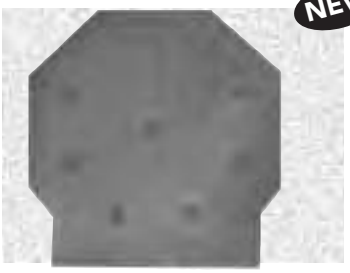

Part Number		Price per ea.
51-0309-00	Spider Stompin Foot Playfield Plexi	156.10

HARNESS ADAPTER – AMERICAN LASER GAMES

NEW

- Allows Happ Controls Optic Guns to be uses on American Laser games
- Keep inventory down, stock the quality Happ Controls guns today
- Happ Controls gun parts are in stock so you down times are less
- Happ Controls exclusive product
- Made in USA

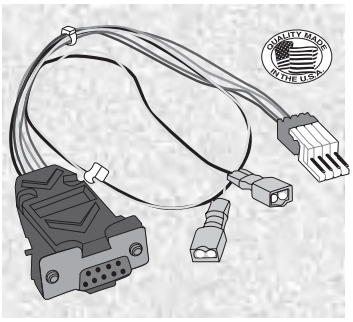

Part Number		Price per ea.
96-0156-00	Harness Adapter- American Laser Games	20.25

AMERICAN LASER GAMES OPTICAL GUN CONVERSION KIT

- Made in USA
- "New" "Faster Play"
- Plavers can reload & shoot gun much faster, which can lead to increased repeat play
- Durable rubber hose

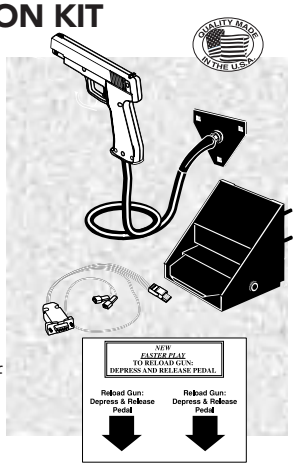

Kit Includes:

- Happ Optical Gun Assembly with rubber hose
- Adapter Harness to plug gun into PCB
- Kit style pedal (Mounts to front of cabinet)
- Decal Sheet with new game instruction
- "Faster Play" to Reload Gun Press & Release Pedal
- Quick connect terminals for pedal
- Hardware to mount gun to cabinet
- Mounting template
- Instructions
- Will not work on "Fast Draw" Game

XX	Gun color
12	Blue
17	Orange

Part Number		Price per ea.
96-0158-XX	American Laser Games Optical Gun Conversion Kit	265.00

REPLACEMENT MOTORIZED HANDLE ASSEMBLY FOR ADDAMS FAMILY

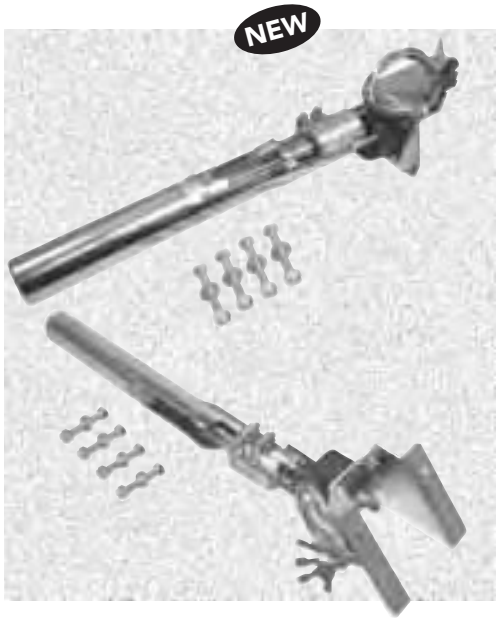

- End those costly repairs and reliability problems with our improved handle assemblies
- Improved reliability in both performance and mounting
- Direct replacement – No wiring changes necessary
- For use in Addams Family game
- Dedicated Left or Right Hand mounting (Left or Right are viewed as you are playing the game)
- Mounting plate has been strengthened and requires four holes per handle to be drilled within cabinet
- Mounting hardware included
- Handle will not twist
- Long Life high performance motor rotates over 30,000 RPM giving you a more realistic feel
- Spare parts available
- Warranty 90 days
- Trade in your old handles and receive a credit of $25.00 each towards the purchase of new handles

Part Number		Price per ea.
95-1632-00	Replacement Handle Assembly- Left	695.00
95-1632-01	Replacement Handle Assembly- Right	695.00

REPLACEMENT MOTORIZED HANDLE ASSEMBLY FOR SHOCKER CHAIR

- Put an end to those costly repairs and reliability problems
- Improved reliability in both performance and mounting
- Direct replacement – No wiring changes necessary
- For use in Shocker Chair games
- Dedicated Left or Right Hand mounting (Left or Right are viewed as you play the game)
- Mounting plate has been strengthened
- Handle will not twist
- Long Life high performance motor rotates over 30,000 RPM giving you a more realistic feel
- Spare parts available
- Warranty 90 days
- Trade in your old handles and receive a credit of $25.00 each towards the purchase of new handles

Part Number		Price per ea.
95-2002-00	Replacement Handle Assembly -Left	695.00
95-2002-01	Replacement Handle Assembly -Right	695.00

Visit Our Web Site:
happcontrols.com
for **NEW** Product Updates!!

REDEMPTION MALLET

- Rugged construction with new improved durability
- Head Size 5.5" dia. x 5" tall
- Overall length 11-3/4"
- 48" security cable
- Blue cloth color

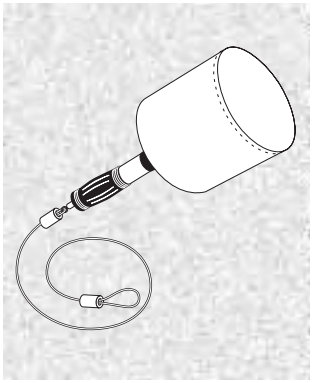

Part Number		Price per ea.	L/25
51-5000-00	Redemption Mallet	54.30	48.25

LARGE REDEMPTION MALLET

- Rugged construction with new improved durability
- Head Size 7" dia. x 6.5" tall
- Overall length 13-3/4" long
- 48" security cable
- Black cloth cover
- Replacement for Whac-A-Mole, Robo-Bop and Circus games

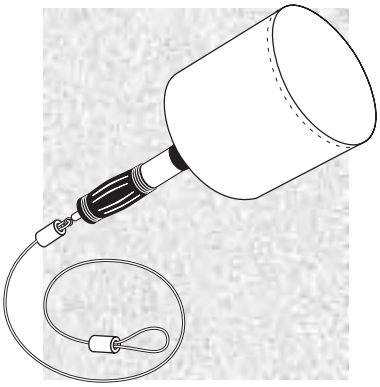

Part Number		Price per ea.	L/25
51-5001-00	Large Redemption Mallet	67.50	60.35

EXTRA LARGE BOWLER PUCK

- 2-7/8"
- Rounded playing edge
- Colored insert
- Bright chrome finish
- For use on bowling games

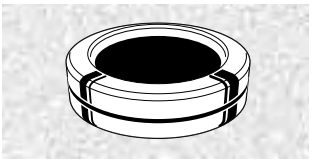

Part Number		Price per ea.
260001	Extra Large Bowler Puck	7.30

BALL PRESSURE GAUGE

- Calibrated 1 to 20 lbs. In 1/2 lb. units
- For all balls with standard inflating valves
- Includes two inflating needles
- Accurate and easy to use
- Check pressure on location, in the field or on the court
- Put one in every tool box

Part Number		Price per ea.
49-1839-00	Ball Pressure Gauge	6.15

SHUFFLEBOARD PUCKS

- Heavy Chrome plated steel
- Plastic-topped caps
- High Quality
- Set of 8 (4 Red / 4 Blue)
- Balanced for better feel and control

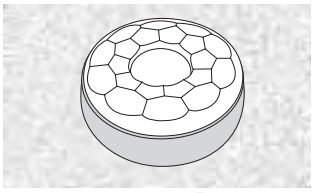

Part Number		Price per set
26-1138-00	American Made Shuffleboard Pucks	152.75
26-1450-00	Economy Shuffleboard Pucks	60.30

PLASTIC REFLECTIVE BAT

- Used on Interactive Light Home Run Derby and I.C.E. batting game
- Lightweight plastic bat will not cause as much damage as aluminum bats
- Blue handle with 3M reflective tape on barrel
- Length: 30”

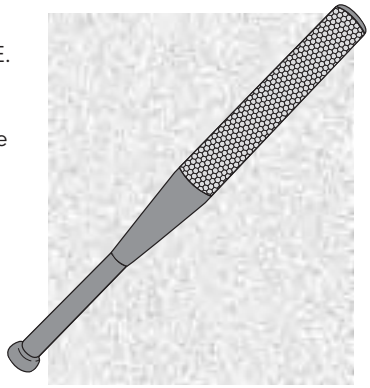

Part Number		Price per ea.
49-5236-00	Plastic Reflective Bat	60.35

ORANGE SHUFFLE PUCK

- Used on Interactive Light Slide-It game
- Made from Delrin material

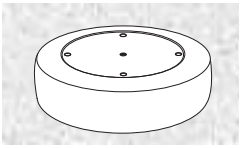

Part Number		Price per ea.
26-1520-00	Orange Shuffle Puck	7.30

HAND PUMP FOR INFLATING BALLS

- 10” length
- Great for inflating basketballs, footballs, soccer balls

Part Number		Price per ea.
49-5360-00	10” Hand Pump	5.20

INFLATING NEEDLE

- Made of Aluminum
- Handy for filling basketballs, footballs, an soccer balls
- 100 per bag, can be sold individually

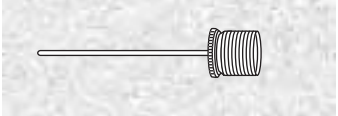

Part Number		Price per ea.
49-5359-00	Inflating Needle	.28

© HAPP CONTROLS

ORIGINAL SOCCER BALL FOR KICK-IT GAME

- NEW IMPROVED DESIGN! Lasts longer!
- A Happ Controls exclusive!
- Original soccer ball for Interactive Light Kick-It games
- 32 panel, #4 ball with polyurethane bladder and steel insert

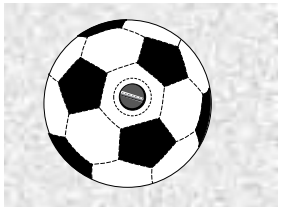

Part Number		Price per ea.	L/12
49-5223-00	Original Soccer Ball For Kick-It Games	76.45	71.35
49-5223-10	72" Tether	17.85	17.25

RACQUETBALLS

- Used in all "Rolldown" type redemption games
- Color: Blue or Yellow
- Size: 2-1/4"
- Made in the U.S.A.

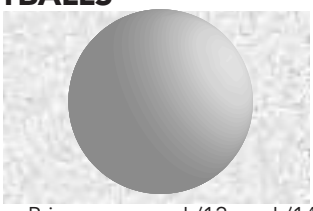

Part Number		Price per ea.	L/12	L/144
49-0654-00	Blue Racquetballs	1.90	1.65	1.30
49-0654-05	Yellow Racquetballs	1.90	1.65	1.45

BASKETBALLS

- For all coin-op basketball games
- Looks just like real pro basketballs
- Made of durable rubber with an interior spun bladder

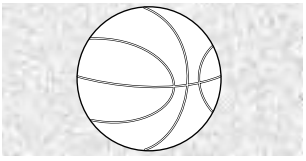

Part Number		Price per ea.
49-3020-00	5-1/2" Mini-Basketball, Multi-Color	4.80
49-0471-00	7" Orange Basketball	4.90
49-1264-00	7" Red, White & Blue Basketball	6.15
49-5353-00	8.75" Junior Basketball	4.95
49-0825-00	9" Orange Intermediate Size	7.85
49-5178-00	9-1/2" Orange Basketball – Official Size	6.90
49-1266-00	9-1/2" Red, White & Blue Basketball	6.75

STEEL CHAIN BASKETBALL NET

- For Rage in the Cage and other games
- Regulation size

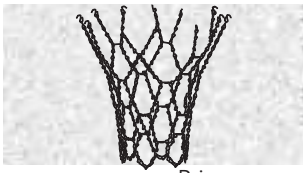

Part Number		Price per ea.
49-0650-005	Steel Chain Basketball Net	15.70

BASKETBALL NET

- 12 loop construction
- Color: red, white and blue

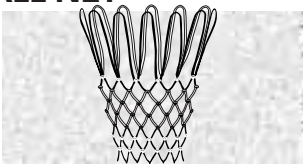

Part Number		Price per ea.	L/12
49-0650-00	Basketball Net- Red, White, Blue	4.90	4.30
49-0650-01	Basketball Net-White	4.90	4.30

BUZZY BEE BALL

- Used on Bay Tek Buzzy Bee Game
- Bay Tek ref. no. A5BA4000
- Color: Yellow and Black

Part Number		Price per ea.
51-0310-00	Buzzy Bee Ball	1.60

3" PLASTIC BALL FOR REDEMPTION GAMES

- Great replacement for composite wood balls
- For use on Roller Ball type redemption games
- Used by leading Family Entertainment Centers
- Durable long life plastic finish
- Same size and weight as composite wood balls
- Color: Black
- Made in the USA
- Note: Will not work on Skeeball or Lighting games that use optic senors

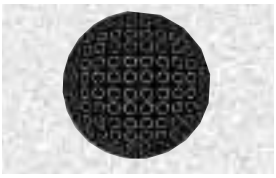

Part Number		Price per ea.	L/48
49-0489-10	3" Plastic Ball	5.20	4.40

2" MELTEC BOOM BALL

NEW

- Original Meltec Deisgn
- Meltec P/N 0110B
- For use with Meltec Cannon Style redemption games
- Black Rubber

Part Number		Price per ea.	L/48
49-0488-00	2" Meltec Boom Ball	7.55	7.25

2" ECONOMY BOOM BALL

NEW

- For use with Meltec Cannon Style redemption games
- 2" Black Rubber Ball

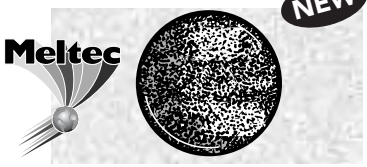

Part Number		Price per ea.	L/48
49-0488-10	2" Economy Boom Ball	7.55	7.25

4-1/2" BOWLING BALL

- For Ball Bowler games
- Solid one-piece construction
- Color: Red and White marbelized design

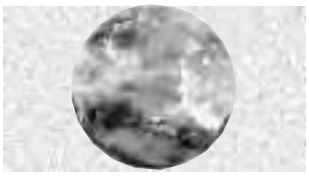

Part Number		Price per ea.
26-1425-00	4-1/2" Bowling Ball	30.15

9" JUNIOR FOOTBALL

- For all coin-op football games
- Looks just like real pro footballs
- Made of durable rubber
- Machine-sewn rubber panels with deep pebbling on surface
- Synthetic leather lacing
- Two-ply fabric lining and butyl bladder
- 1/2" white stripes meet high school and college specifications

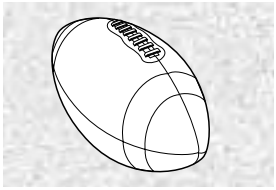

Part Number		Price per ea.	L/50
49-0470-00	9" Junior Football	7.65	7.15

DELTRONIC LABS TICKET DISPENSER

- "Quick Release" face plate
- You can "snap out" one ticket dispenser and immediately replace it with another in just seconds. No tools necessary
- Easy access to front of rollers and ticket guides
- Bottom METAL ticket guide
- Foolproof braking system is easily adjustable
- Optical sensor dust cover reduces maintenance
- Validation "Diamond" mark identifies tickets
- Adjustable ticket stop
- Compact and lightweight - 3"W x 4"H x 5-1/2"L, 2-1/4 lbs.

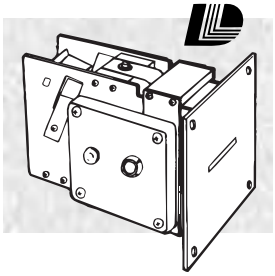

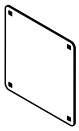

Blanking Plate (42-3394-00) Available

Part Number		Price per ea.	L/10
42-0544-00	Deltronic Labs DL-1275 Continuous Type Ticket Dispenser	156.70	150.60
42-0547-00	Deltronic Labs DL-4-S-S Pulse Type Ticket Dispenser	156.70	150.60

REDEMPTION TICKETS

- Stock 1 5/32" x 2" Redemption Tickets
- Printed one side - "One Coupon"
- Consecutively single numbered
- 2,000 tickets per pack (string tied)
- Sold per pack of 2,000
- 30 packs per case
- **Custom imprinting available**

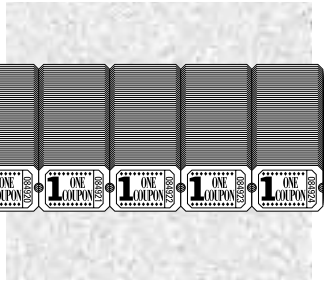

Part Number		Price per pk.	L/30
49-0906-00	Redemption Tickets, Blue	5.85	5.25
49-0906-10	Redemption Tickets, Red	6.15	5.55
49-0906-13	Redemption Tickets, Green	6.15	5.55
49-0906-15	Redemption Tickets, Yellow	6.15	5.55
49-0906-16	Redemption Tickets, Gray	6.15	5.55
49-0906-17	Redemption Tickets, Orange	6.15	5.55
49-0906-18	Redemption Tickets, Pink	6.15	5.55

SLIM TICKET DOOR

- Compact design to fit in small mounting area
- Comes with ticket bin to hold 4,000 tickets
- Overall dimensions: 5.75" wide x 22.25" high
- Cutout dimensions: 4.375" wide x 21" high
- Each ticket door includes one ticket dispenser label (42-1378-00)

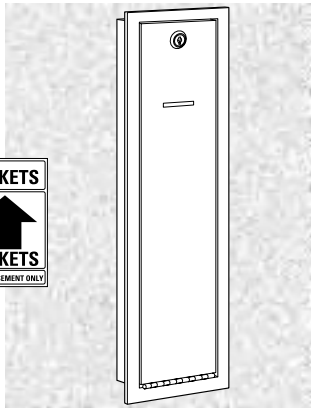

Part Number		Price per ea.	L/6
40-0390-00	Slim Ticket Door w/4,000 Ticket Bin	78.40	69.90

TICKET DISPENSER MOUNTING PLATE

- Allows Ticket Dispenser to mount to front of game with carriage bolts
- Simply cut out square hole and install
- Made from durable Stainless Steel

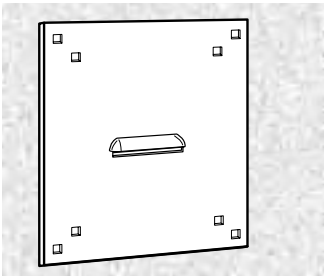

Part Number		Price per ea.	L/10
42-1268-00	Ticket Dispenser Mounting Plate	12.10	10.95

ENTROPY 2000 TICKET DISPENSER

- Reduced ticket jams
- Easy to remove front plate
- Covered optic sensor
- Ticket feed button for easy ticket loading
- Direct compatibility to all major ticket dispensers on the market
- Adjustable Ticket Widths (1" or $1\frac{5}{32}$")
- High speed ticket dispensing 3 tickets per second
- Virtually Dust Free Ticket Validation with extra deep embossment of tickets for additional security
- Diagnostic LED sensors
- Fully accessible ticket path with durable stainless steel guide
- 12 Month Warranty (15 months from date of manufacture)

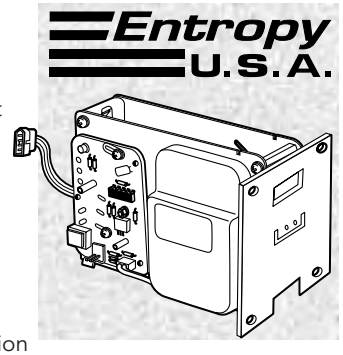

Part Number		Price per ea.	L/6	L/11	L/25
42-1337-00	Entropy 2000 Ticket Dispenser Continuous Type (TD963CR)	91.50	89.15	86.85	83.40
42-1337-10	Entropy 2000 Ticket Dispenser Pulse Type (TD963PR)	91.50	89.15	86.85	83.40

BLANKING PLATE FOR TICKET DISPENSERS

- Now you can remove your ticket dispenser and cover the hole with an OEM blanking plate
- Black painted metal blends in with equipment
- Size: 5.32" x 5.07" x .20"
- Easy installation with bolts (sold separately)
- Made in USA

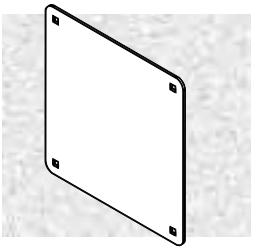

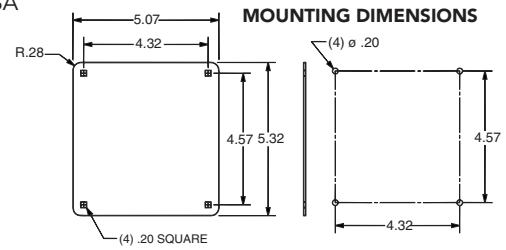

Part Number		Price per ea.
42-3394-00	Blanking Plate for Ticket Dispensers	8.55

© HAPP CONTROLS

TICKET DISPENSER LABELS

- Great way to attract attention to ticket dispensing machines
- Simply peel off and stick on
- Black printing on bright yellow background
- Durable polystyrene material adhesive backed
- Size: 5.5" x 4"
- Complete set of 3 decals: "Tickets", "Tickets with Arrow", and "For Amusement Only"

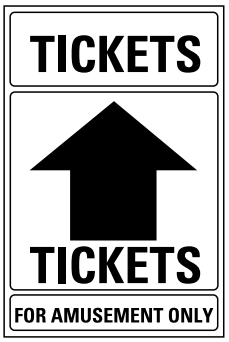

Part Number		Price per ea.	L/25
42-1378-00	Ticket Dispenser Label Set	2.10	1.90

BLANKING PLATE FOR DOOR CUTOUT

- For use with ticket dispenser and bill validator doors
- Covers the hole where the door has been removed
- Black finish – blends In with equipment
- Easy installation with bolts (sold separately)
- Size: 16.05" H x 7.09" W
- Made in USA

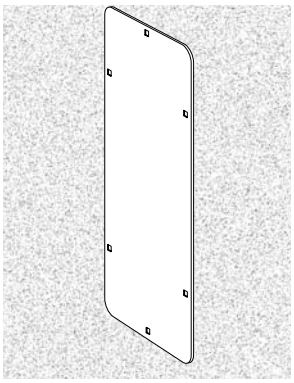

Part Number		Price per ea.
42-0663-00	Blanking Plate for Door Cutout	19.35

PARTS FOR SKEEBALL GAMES

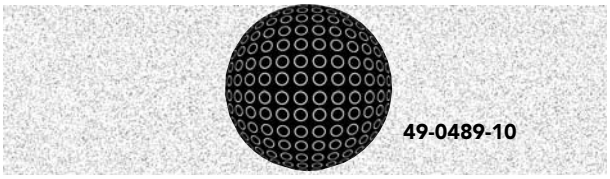

Part Number		Price per ea.
25020	Sandpad Set	19.10
8001361	Lane Number Set, Classic Black	10.65
80072-4	Ball Release Spring	4.00
800773-3	Ball Sensor	25.35
51-0305-00	4 x 240 Solenoid (Coil)	28.75

SANDPAPER FOR DYNAMO AIR HOCKEY TABLES

- 240 grit
- 6" diameter
- Adhesive backed

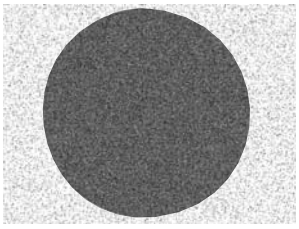

Part Number		Price per ea.
980400200	Sandpaper for Dynamo Air Hockey Tables	2.20

HAPP CONTROLS SELLS BRAND NAME QUALITY

WESCO Industrial Products, Inc. · ZIPPY · Master Lock · KROY · Lynde-Ordway · PAP-R Products · S.E.M. Inc. · MAGLINER Route Distribution Solutions · TERGO Cleaning Technologies · LOCTITE · mei · FEDERAL LOCK COMPANY · KEP · MAG LITE · DURACELL · Campbell · WD-40 · CETIKER · CHERRY · Stevens · Diamond/Xcelite · HAPP CONTROLS · Escort · Ardac · Carrie · portasol P-1 · American Lock Company · KLOPP INTERNATIONAL, INC. · MAGNER · EAGLE · molex · ITW Devcon · CashCode · KESTER · AZKOYEN · 3M · HUBBELL Wiring Device Division · INSTANT KRAZY GLUE · COOPER · Bussmann · TRIPP-LITE POWER PROTECTION · RAYOVAC · NORTECH · EVERPURE · BladeSmith · Weller/Ungar · Wiss · Plumb · LectroTruck STAIR CLIMBING SYSTEM · GATOR GRIP · Weller · MAG II 20 · VELCRO FASTENING SYSTEMS · Xcelite · IMONEX · EVEREADY · KEY-BAK · GEMINI · ADVANCE TRANSFORMER CO. · Crescent · Dutro COMPANY

ACCUMULATING COIN VENDING TIMER

- Provides vend time after the selected number of initiate switch closures to start is reached and allows the total vend time to be extended for each additional initiate switch closures
- Accumulates 1 to 256 coins
- Switch selectable 1-7 coins to start
- Vend time from 15 seconds to 31 minutes
- Coin switch can be connected to a counter
- 30 amp, 1 HP @ 125vac contacts
- 12vdc or 120vac operation
- UL and CSA approvals

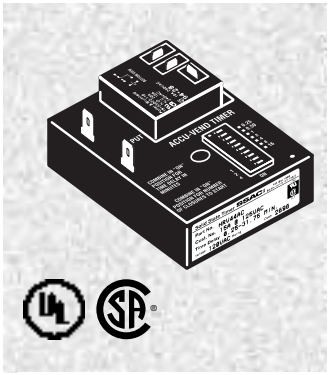

Mounting Dimensions

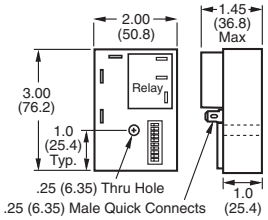

Isolated Output

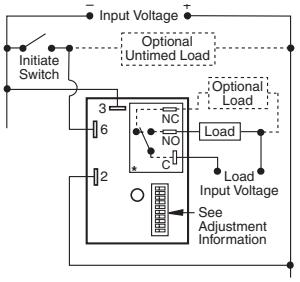

With 30 ampres of switching capacity, it allows direct coin operated control of loads like compressors, pumps, motors, heaters and lighting.

This accumulating coin vending timer will count each closure of the initiate switch. When the total number of initiate switch closures equals the number to start set on the lower 3 DIP switches, the load is energized and the vending time is started. For every initiate switch closure, the accumulating coin vending timer adds one time per coin period, as set on the upper 7 DIP switches, to the total vending time.

Microcomputer accuracy, combined with a power relay, makes the Coin Vending Timer ideal for cost-sensitive single coin or token vending machines.

Part Number		Price per ea.	L/3
42-6976-00	12vdc Coin Vending Timer	162.05	157.40
42-6976-120	120vac Coin Vending Timer	199.45	187.40

HEAVY DUTY GAME STOOLS

- 30" high commercial game stool
- Large 14" diameter swivel seat
- Vinyl covered seat is padded for extra comfort
- Double rung chrome steel for superior strength
- Available with black or red seat
- Shipped unassembled
- Instructions and hardware included

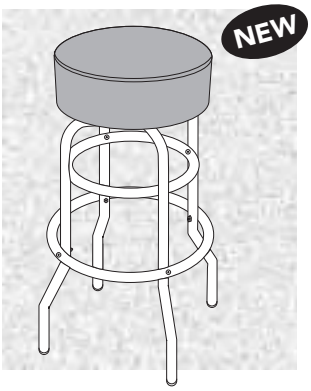

Part Number	Price per ea.	L/6	
26-1515-16	Black Game Stool	62.50	54.25
26-1515-10	Red Game Stool	62.50	54.25

CREDIT ACCUMULATOR/TIMER

- Accumulates 1 to 16 coin drops before giving pulse credit
- Timer circuit up to 10 minutes
- Single or Dual Vend
- Auto or Manual Vend
- Two Price Vend Option
- Can operate when illuminated "Push to Vend" switch is desired
- 2 pole output relay
- Operates on 120 vac or 12 vdc
- Supplied with Wiring Harness and Mounting Kit

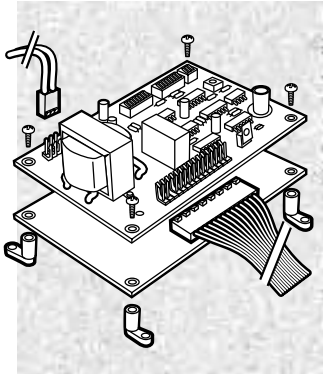

Part Number		Price per ea.	L/3
42-1138-10	Dual Credit Accumulator/Timer	150.90	143.60

VENDING DISPENSER MOTOR

- Used to dispense or vend numerous items
- 12vdc motor
- Overall dimensions: 2"(W) x 4.83"(D) x 2.65"(H)

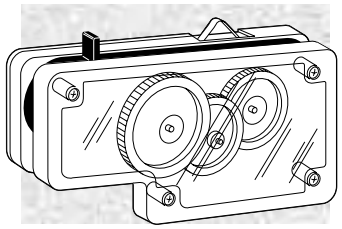

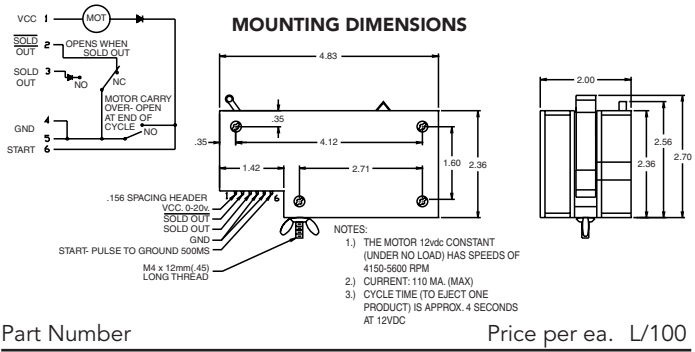

Part Number		Price per ea.	L/100
49-0558-00	Vending Dispenser Motor	60.35	54.30

HEAVY DUTY GAME STOOL WITH BACKREST

NEW

- 30" tall, commercial game stool
- Backrest provides additional support and comfort
- Large 14" diameter swivel seat
- Vinyl covered seat is padded for extra comfort
- Double rung chrome steel for superior strength
- Available in black or red vinyl
- Shipped unassembled
- Instructions and hardware included

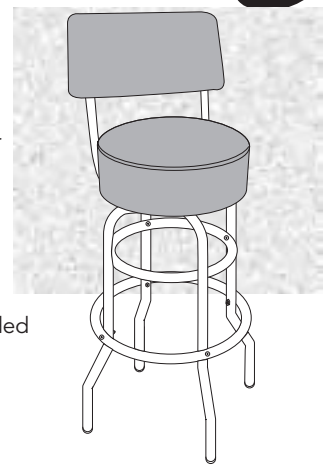

Part Number		Price per ea.	L/6
26-1805-00	Bar Stool w/Backrest- Red	86.65	74.45
26-1805-10	Bar Stool w/Backrest- Black	86.65	72.95

© HAPP CONTROLS

ORANGE SHUFFLE PUCK

- Used on Interactive Light Slide-It game
- Made from Delrin material

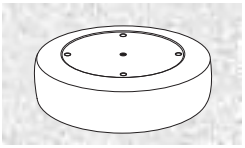

Part Number		Price per ea.
26-1520-00	Orange Shuffle Puck	7.30

REPLACEMENT POTENTIOMETERS

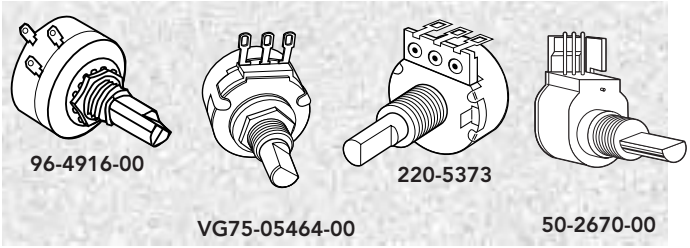

Part Number		Price per ea.
VG75-05464-00	Replacement 1K Pot Namco 40° Namco Ref. VG75-05464-00	45.25
VG75-03824-00	Replacement 1K Pot Namco 60° Namco Ref. VG75-03824-00	43.75
220-5373	Replacement 5K Pot Sega	21.90
96-4916-00	Replacement 5K Long Life Pot .50" Shaft Namco Ref. VG80-02975 WMS Ref:5014-12909-00	37.45
50-8026-02	Replacement 5K Pot .750" Shaft Namco Ref. AC75-04425-00	11.00
50-8056-00	Replacement 5K Pot 7/8" Shaft	19.35
50-8026-00	Replacement 5K Pot 1.125" Shaft Namco Ref. VG75-06089-00	11.00
SG09-008-006	Replacement 5K Pot Namco 1.125" Shaft Namco Ref. SG09-008-006	50.95
3541H-1-103	Replacement 10K Bourns Pot Atari for Hard Driving	80.20
50-2670-00	Replacement 5K NEI (Sensorcube) w/Connector	22.95
50-2064-00	Replacement 5K Pot for Happ Joysticks "S" Taper, 3/4" Shaft	32.15
50-2032-00	Replacement 100K Pot for Happ, Joysticks "S" Taper, 3/4" Shaft	25.70
50-0153-00	Replacement 100K Pot for Happ Steering Wheels	15.15

Visit Our Web Site:
happcontrols.com
for *NEW* Product Updates!!

ROTARY BEACON LIGHT

- Bright 12 volt incandescent bayonet base bulb #1156
- 12 VDC gear driven motor rotates reflecting shield around lamp
- New design with removable top cover provides easy bulb replacement
- T-10 Torx® tamperproof screws used to retain dome for added security
- Suitable for upside down installation
- Available with inner or outer mounting plate
- Optional chrome ring for extra sparkle
- Replacement bulbs available

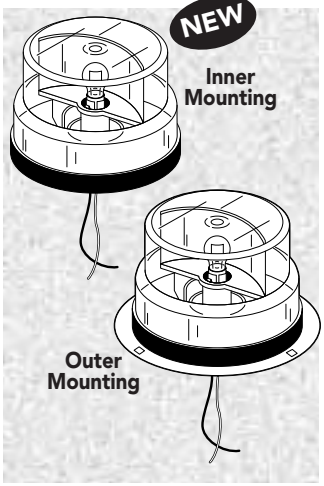

INNER MOUNTING PLATE

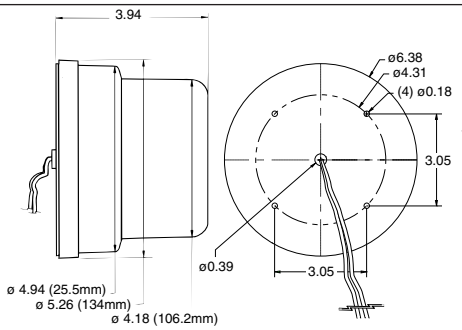

Installation Instructions For Inner Mounting Plate
1) Remove dome and/or Chrome Ring.
2) Insert 4 #8 screws through 4 holes in black plastic base.
3) Secure screws with 4 #8 nuts on inside of cabinet
4) Re-attach dome and/or chrome ring with (2) T-10 Torx® Tamperproof #6-32 screws provided.

OUTER MOUNTING PLATE

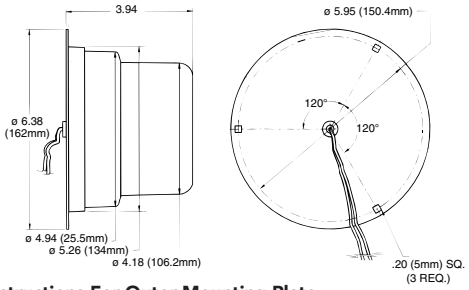

Installation Instructions For Outer Mounting Plate
1) Drill 3 holes for #10 carriage bolt (.20 diameter) per dimensions shown or use existing assembly as template and mark 3 holes, then drill.
2) Drill 1/2" diameter center hole for wires.
3) Feed wires through center hole, insert three #10 carriage bolts and secure inside cabinet with 3 nuts.

Part Number	Color	Mounting Plate	Chrome Ring	Price Per ea.	L/10
95-0115-10I	Red	Inner	No	42.25	35.00
95-0115-12I	Blue	Inner	No	42.25	35.00
95-0115-13I	Green	Inner	No	42.25	35.00
95-0115-17I	Amber	Inner	No	42.25	35.00
95-0115-10IC	Red	Inner	Yes	48.25	39.85
95-0115-12IC	Blue	Inner	Yes	48.25	39.85
95-0115-13IC	Green	Inner	Yes	48.25	39.85
95-0115-15IC	Yellow	Inner	Yes	48.25	39.85
95-0115-17IC	Amber	Inner	Yes	48.25	39.85
95-0115-10U	Red	Outer	No	42.25	35.00
95-0115-12U	Blue	Outer	No	42.25	35.00
95-0115-13U	Green	Outer	No	42.25	35.00
95-0115-15U	Yellow	Outer	No	42.25	35.00
95-0115-17U	Amber	Outer	No	42.25	35.00
95-0115-10UC	Red	Outer	Yes	48.25	39.85
95-0115-12UC	Blue	Outer	Yes	48.25	39.85
95-0115-13UC	Green	Outer	Yes	48.25	39.85
95-0115-15UC	Yellow	Outer	Yes	48.25	39.85
95-0115-17UC	Amber	Outer	Yes	48.25	39.85

REEL MECH.

- Sizes available: Width 58, 66 or 79.5mm (6-Spokes)
- Unique quick release, snap-in base for easy removal of score reels
- Hall Effect Switch mounted on PCB
- Position of magnet on reel can be easily adjusted without tools
- Standard stepper motor with 48 steps (12v or 24v) other motors also available
- Unique stepper motor adjustment by pulling security lever (no tools required)
- Unique lamp socket adjustment feature (no tools required)
- One lamp per socket available for all sizes
- Two lamps per socket available on 79.5mm size, two lamps can light individually or at same time
- Three positions available to assemble the sockets: upper, upper left and upper right
- Sockets can be assembled together or separated, depending on the number of symbols on reel strip

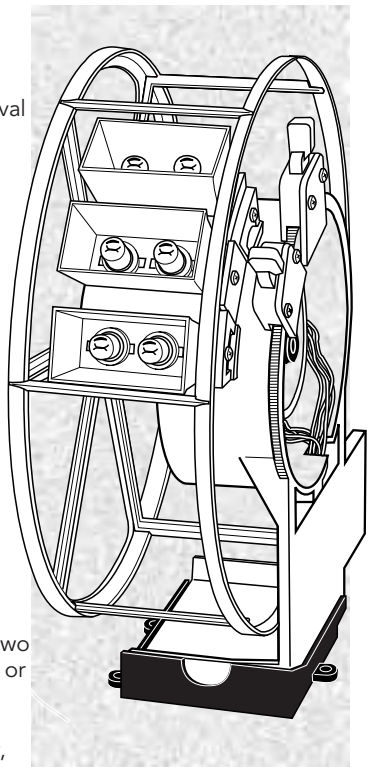

Part Number		Price per ea.
Call for Part No.	Reel Mech.	Call for Pricing

SLOT TOWER LIGHT

- Durable design
- Various colors available
- Available with one, two or 3 stages
- Complete with Molex plug
- Chrome base, top and ring between stages

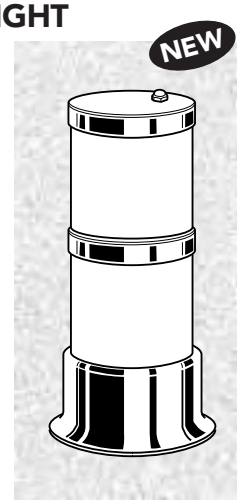

V=Voltage
A = 6V
B = 12V
C = 28V

Mid-Tier Color
See Color Chart

29-V P 0 0 - B M T

Plating
C = Chrome
B = Brass

Top Tier Color
See Color Chart

Bottom Tier Color
See Color Chart

COLOR:
R = Red
Y = Yellow
W = White
G = Green
B = Blue

Part Number		Price per ea.
29-VC00-B	1-Stage Tower Light, 3-1/2" Overall Nominal Size	12.95
29-VC00-BM	2-Stage Tower Light, 6" Overall Nominal Size	18.35
29-VC00-BMT	3-Stage Tower Light, 8" Overall Nominal Size	22.95
29-0601-10	Red Insert Only	1.30
29-0601-11	White Insert Only	1.30
29-0601-12	Blue Insert Only	1.30
29-0601-13	Green Insert Only	1.30
29-0601-15	Yellow Insert Only	1.30

T-MOLDING

- Use for repair or new construction
- Fits standard edge groove in wood cabinets
- Various colors available
- Sold per foot, minimum 25 foot lengths

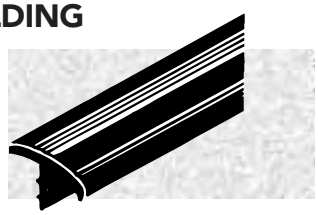

Part Number		Price per ft.
49-0998-00	Black, Smooth T-Molding for 5/8" Wood	.38
49-0539-00	Black, Leather Texture for 3/4" Wood	.43
49-0999-00	Black, Smooth T-Molding for 3/4" Wood	.38
49-5224-00	Black, w/Chrome Stripe Down the Middle for 3/4" Wood	.97
49-0539-300	Black, Smooth T-Molding for 7/8" Wood	.56
49-0539-200	Black, Leather Texture for 7/8" Wood	.57
49-0999-10	Black, Smooth T-Molding for 1-1/2" Wood	.66
49-0995-00	Blue, T-Molding for 3/4" Wood	.65
49-0998-01	Chrome, T-molding for 5/8" Wood	.77
49-3114-00	Polished Chrome Plastic Metallic for 3/4" Wood	1.20
49-0996-00	Green, T-Molding for 3/4" Wood	.65
49-3114-38	Polished Brass, T-Molding for 3/8" Wood	.81
49-3114-10	Polished Brass, T-Molding for 3/4" Wood	1.20
49-3114-01	Polished Brass, T-Molding for 13/16" Wood	1.20
49-3114-100	Polished Brass, T-Molding for 1" Wood	1.20
49-0539-100	Red, Leather Texture for 3/4" Wood	.43
49-0994-00	Red, Smooth T-Molding for 3/4"	.65
49-5051-00	White, T-Molding for 3/4" Wood	.34
49-5121-00	Yellow, T-Molding for 3/4" Wood	.51
49-0994-00	Red Smooth T-Molding for 3/4" Wood	.65

P.C. BOARD HOLDER

- Durable black nylon plastic construction
- Great for use within Universal Kit Cabinets
- Height adjustable from 4-1/2" to 12-1/2" to hold small or large PCB's
- Able to hold multi-level PCB's
- Mounts to wall of cabinet via molded mounting holes

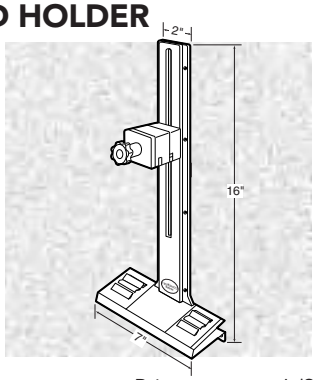

Part Number		Price per ea.	L/25
49-0007-01	P.C. Board Holder	10.95	9.70

PCB MOUNTING FEET

- Durable white plastic mounting feet
- Each set includes 4 mounting feet and 8 screws: (4 wood, 4 machine)
- Allows PCB to be mounted either vertically or horizontally to numerous surfaces

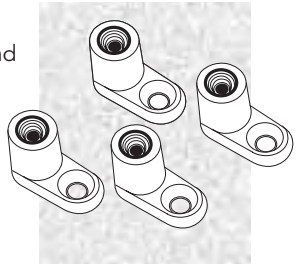

Part Number		Price per ea.
49-1019-00	PCB Mounting Feet	3.05

© HAPP CONTROLS

COOLING FAN

- Top quality fan cools the electronics in your video game
- Industry standard size 4.69" square x 1.5" deep
- Low noise; impedance protected
- 115 vac fan easily mounts in most equipment
- UL Approved
- Air flow 98-106 CFM (Cubic feet per minute)
- Cast aluminum frame
- 2,900 - 3,200 RPM

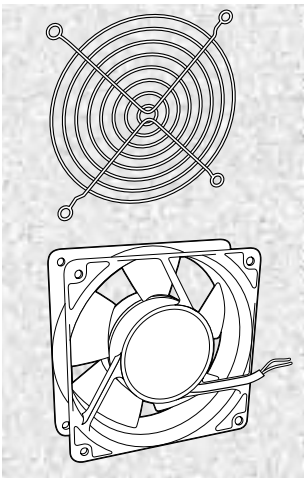

MOUNTING DIMENSIONS

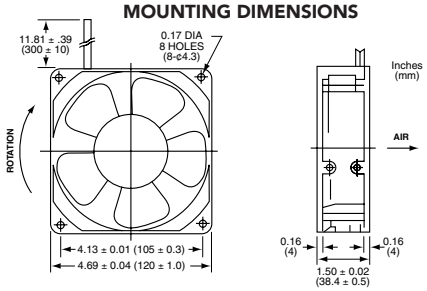

Part Number	Description	Price per ea.	L/25
80-0006-10	Sealed Ball Bearings w/flying leads	17.20	14.90
80-0006-11	Sleeve Bearings w/flying leads	14.00	12.70
80-0006-20	Metal Guard for Cooling Fan	1.55	1.40

COOLING FAN WITH 110VAC ADAPTER

- Cools the electronics in your game
- 3 -1/8" x 1" 12vdc fan
- 110v adapter pre-wired
- Simply plug adapter into a 110v outlet and the fan will power up

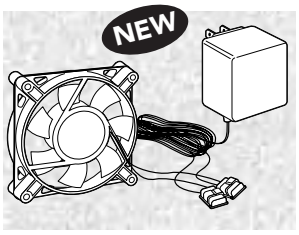

Part Number		Price Per Ea.	L/25	L/50
80-1140-00	Cooling Fan with 110vac Adapter	24.15	20.50	18.15

CABINET CORNER PROTECTOR

- Sturdy steel reinforcement plate keeps pressed wood from coming apart when moving
- Also used in the repair of cabinets
- Round corners protect walls, games etc. from damage when moving machine
- Round corners make moving the cabinet easier. Slides over uneven cracks, bumps, etc.
- Complete with hardware
- Made in the U.S.A.

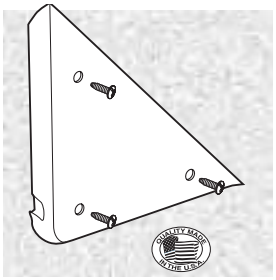

Part Number		Price per ea.
49-0570-00	Cabinet Corner Protector	5.20

CABINET WHEEL ASSEMBLY

- 3" heavy duty nylon wheel
- Capacity: 440 lbs.
- Built in Mounting Bracket to allow easy mounting into cabinet

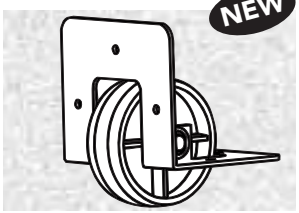

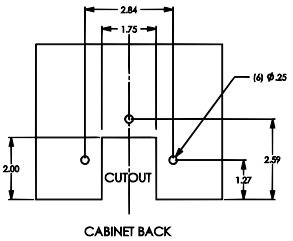

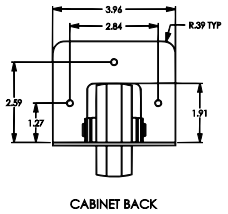

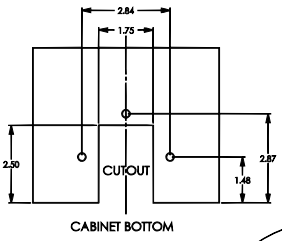

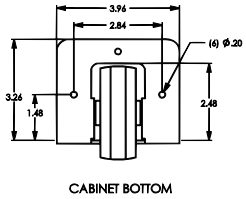

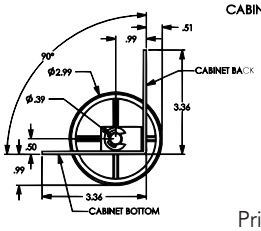

Part Number		Price per ea.	L/25
33-1198-00	Cabinet Wheel Assembly	5.55	5.20

COOLING FAN ASSEMBLY WITH BASE AND 6" LEADS

- Fan size is: 3.15" x 3.15" x 1"
- Sleeve bearing
- Mounting base and grilles included
- 6" leads with connector
- Easily mounts to cabinet to cool CPU boards
- This is an original Midway item used in games like: Gauntlet, Hyperdrive, Road Burners
- 12vdc, brushless
- UL and CE approved

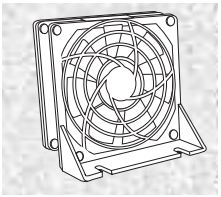

Part Number		Price per ea.
A-21055	Cooling Fan Assembly with Base and 6" Leads	9.35

WHEEL ASSEMBLY FOR CABINET

- Heavy-duty construction
- Steel bracket w/nylon wheel

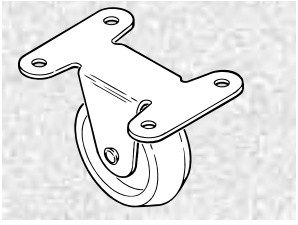

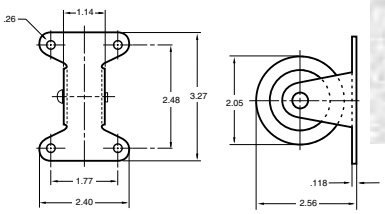

MOUNTING DIMENSIONS

Part Number		Price per ea.	L/25
49-0077-00	Wheel Assembly for Cabinet	4.40	4.05

HIGH QUALITY CONTROL PANEL OVERLAY

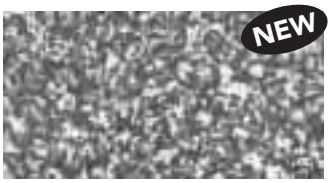

- New wider design!
- Highest quality material and adhesive designed for years of service
- 10 Mil PVC resists scratching and cracking especially around the corners
- Neutral color and graphic design
- Ideal for any control panel overlay application
- Color: blue/black/gray
- Size: 19 7/8" x 48"
- Fits Dynamo HS15 and Showcase cabinets

Part Number		Price per ea.	L/10
49-3132-00	High Quality Control Panel Overlay	32.15	31.10

PANEL CLAMP

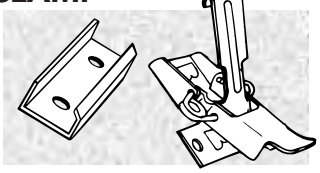

- Universal strike – mounts flat or at right angle
- Wire spring for easy latching

Part Number		Price per ea.	L/100
49-0059-00	Universal Panel Clamp	4.90	4.30

CABINET HANDLE

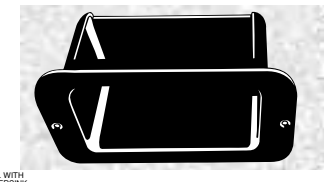

- Molded plastic construction
- Allows easy grip for moving cabinets

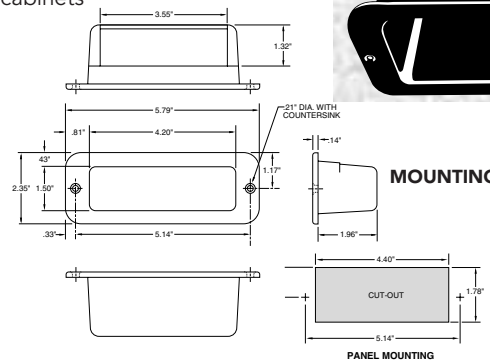

Part Number		Price per ea.	L/12
49-0067-00	Cabinet Handle	2.40	2.15

CABINET HANDLE VENTED

- Original Midway design
- Made of durable high impact molded plastic
- Color: Black
- Made in USA

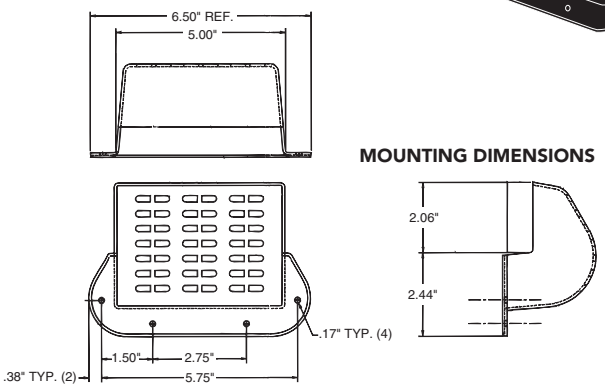

Part Number		Price per ea.
03-8326	Cabinet Handle Vented	2.75

RETAINER FOR VIDEO GAME MARQUEE

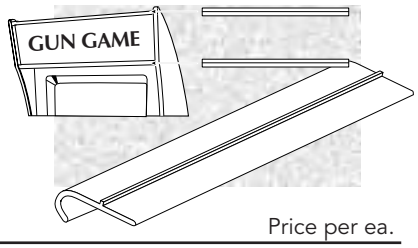

- Retains marquee plexi at both the top and bottom
- To use simply cut to marquee width and install
- Material: Black rigid PVC
- Sold in 10 ft. lengths

Part Number		Price per ea.
49-1000-00	Retainer for Video Game Marquee	12.05

LEG LEVELERS

- 1-1/2", 2" or 4" thread length
- Other sizes available upon request

Part Number	Description	Thread	Thread Length	Load	Base Dia.	Price per ea.	L/25
49-1002-03	Leg Leveler w/o nut	3/8–16	1-1/2"	200lb.	1.75"	.93	.86
49-1002-00	Leg Leveler w/o nut	3/8–16	2"	200lb.	1.75"	.84	.79
49-1002-02	Leg Leveler w/nut	3/8–16	2"	200lb.	1.75"	.91	.86
49-1002-035	Leg leveler w/o nut	3/8–16	2"	250lb.	2.03"	5.85	4.65
49-1002-038	Leg leveler w/o nut	1/2–13	2"	500lb.	2.40"	6.15	5.40
49-1002-041	Leg leveler, Swivel w/nut	3/8–16	2"	3750lb.	1.25"	13.80	11.50
49-0449-00	Leg leveler w/o nut	3/8-16	3"		1.75"	1.30	1.15
49-3042-00	Leg Leveler, Swivel w/nut	3/8–16	4"	3750lb.	1.25"	16.75	13.35
49-3043-00	Leg Leveler, Swivel w/nut	1/2–13	4"	3750lb.	1.25"	29.85	22.90
49-1002-042	Leg leveler, Swivel w/nut	1/2–13	2"	5000lb.	1.875"	21.40	16.80
49-1002-01	Leg Lever Nut	3/8–16	—	—	—	.12	.11
49-1002-04	T-Nut	3/8	—	—	—	.61	.53

BLACK RUBBER LEG LEVELER CUP

- Ideal for amusement and vending equipment
- Prevents equipment from slipping or sliding
- Fits leg levelers with 1-3/4" base diameter or less
- Will not scratch floors

Part Number		Price per ea.
26-1528-00	Black Rubber Leg Leveler Cup	1.30

MULTI-SIZE CUP & CAN HOLDER

- Made in USA
- Durable high impact polystyrene
- The only cup holder that can handle multiple beverage sizes from cans to "jumbo" cup sizes
- Convenient "mug handle" groove accepts beer mugs
- 3 pre-drilled mounting holes
- Drain hole stops excess liquid from collecting in the bottom
- Color: Black

Part Number		Price per ea.
27-1422-00	Mulit-Size Cup & Can Holder	6.30

© HAPP CONTROLS

LEG LEVELER MOUNTING PLATE

- 3/8" thread
- Steel plated

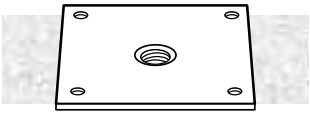

Part Number		Price per ea.	L/12
49-1500-00	Leg Leveler Mounting Plate	3.05	2.45

LEG LEVELER MOUNTING PLATE WITH 1/2" PEM NUT

- With 1/2-13" Pem Nut for leg leveler
- 2.75" square
- 2" center mounting holes
- Mounting holes .31" diameter

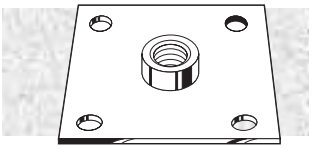

Part Number		Price per ea.
49-1501-00	Leg Leveler Mounting Plate w/Pem Nut	8.30

REPLACEMENT BULB FOR SPORTS ARENA

- For use on American Sammy Sports Arena Game
- Keep your games earning potential to it's maximum by replacing those burned out bulbs
- Each machine contains 64 bulbs (8 Red, 56 Clear)
- Available in both Clear or Red bulbs
- 24 Volts, 5 Watts

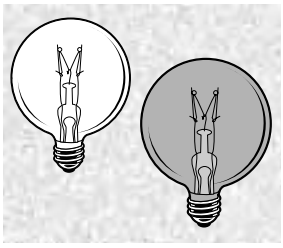

Part Number		Price per ea.	L/25
91-0051-00	Sports Arena Replacement Bulb, Clear	1.90	1.80
91-0050-00	Sports Arena Replacement Bulb, Red	2.05	1.95

BEVERAGE RACKS

- Easily mounts to the side of any game or wall
- Prevents drinks from spilling on equipment, video game or pool table
- Chrome polished steel tubing
- 2 mounting brackets welded to frame enables you to securely fasten to game or wall

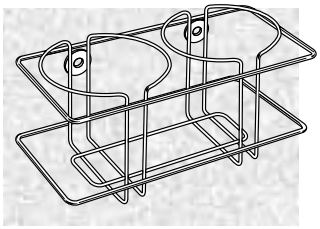

* Fully reinforced for extended wear

Part Number		Price per ea.
27-1062-01	2 Drink Beverage Rack	5.55
27-1062-11	3 Drink Beverage Rack	7.65

FLIP-OVER ASHTRAY

- Easily mounts to any coin-op game
- Empty ashtray by just flipping it over
- Sturdy metal construction

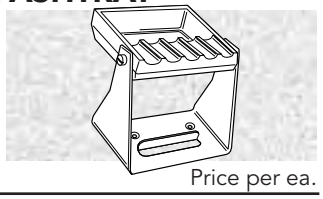

Part Number		Price per ea.
51-0302-00	Flip-Over Ashtray	6.10

HIGH BOWLER NUMBERED CARDS

- Used to list players scores and rankings
- "Winning" number under gold "scratch-off" seal
- 100 or 200 names per card

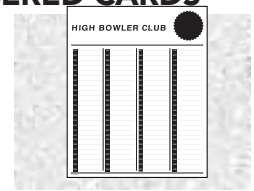

Part Number		Price per ea.
27-1112-100	100 Names	1.30
27-1112-00	200 Names	1.30

PARTS FOR SKEEBALL GAMES

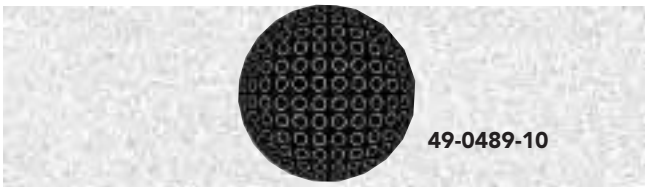

Part Number		Price per ea.
49-0489-10	3" Plastic Ball	5.20
25020	Sandpad Set	19.10
8001361	Lane Number Set, Classic Black	10.65
80072-4	Ball Release Spring	4.00
800773-3	Ball Sensor	25.35
51-0305-00	4 x 240 Solenoid (Coil)	28.75

PARTS FOR CRANE GAMES

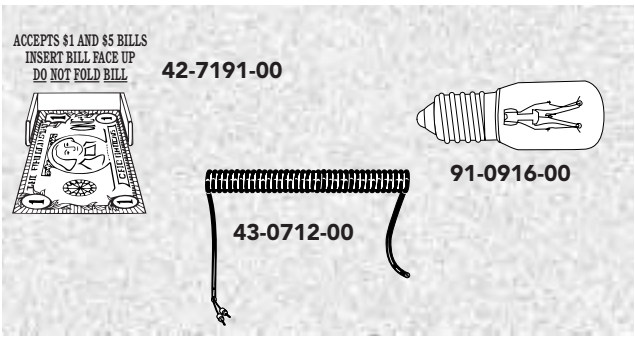

Part Number			Price per ea
42-7191-00	–	Validator Label, $1 & $5, for Rainbow Crane	3.15
43-0591-00	70-0035	Claw String for Big Choice Crane	.24
43-0592-00	70-0001	O-Ring / Drive Belt for Big Choice Crane	1.60
43-0593-00	70-0178	Claw Coil Cable for Big Choice	20.50
43-0712-00	70-0052	Cable Only for Big Choice Crane	15.25
49-0682-00	–	4 Amp Ceramic Fuse for Big Choice Crane	6.75
91-0914-00	70-0151	Lamp Socket for Big Choice Crane	2.70
91-0915-00	70-0330	Light Fixture for Big Choice Crane	72.35
91-0916-00	70-0077	Flashing Lamp for Big Choice Crane, 60V, 10W	1.25
95-0593-00	70-0071	Actuator #1 for Big Choice Crane	2.50
95-0594-00	70-0070	Actuator #2 for Big Choice Crane	2.50
95-0595-00	70-0072	Actuator #3 for Big Choice Crane	2.65
95-0596-00	70-0073	Actuator #4 for Big Choice Crane	3.20
95-0597-00	70-0020	Switch #22 for Big Choice Crane	15.60
95-0598-00	70-0023	Switch #25 for Big Choice Crane	11.55
95-0599-00	70-0019	Nylon Drive Gear for Big Choice Crane	7.25
95-0601-00	70-0014	Motor for Big Choice Crane	266.25
CS-834	CS-834	Gripper Coil for Crane Games	13.35
CS-992	CS-992	Coil for Hollywood Crane	22.25
CS1121	CS1121	Claw Coil for Smart Candy Crane	13.35
91-1186-00	_	Crane Lamp, 48-60v,10w, Clear	1.55
91-1187-00	_	Marquee Lamp, 130v, 10w, Clear	.91

KROY DURATYPE 244RS LABELING MACHINE

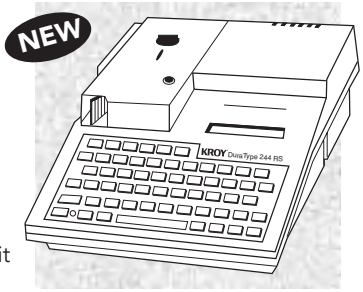

- Ideal for industrial or office applications
- Can be connected to your computer by a RS-232 serial port to print labels directly from Windows software (cable not included)
- Printer can be disconnected from computer and can go "on location" as a portable unit
- Prints up to four lines of text and has a built-in Code 39 barcode
- Auto repeat function allows up to 99 copies
- Standard typewriter style keyboard
- 16-character display lets you review and edit before printing
- Word out function deletes one word at a time
- Text may be scaled 2X vertically or horizontally
- Thermal transfer printing
- Prints up to 15 characters per second; 240 dots per inch resolution
- Dimensions: 8" wide X 9.5" deep X 2 7/8" high
- Weight: 3 lbs. 7 oz. without batteries
- Tape cartridge is not supplied with printer

Part Number		Price per ea.
27-1421-00	Kroy DuraType 244RS Labeling Machine	163.85
27-1419-00	Tape Cartridge – White on Black (.5" x 50')	32.75
27-1420-00	Tape Cartridge – Black on White (.5" x 50')	32.75

KROY K750 LABEL MACHINE

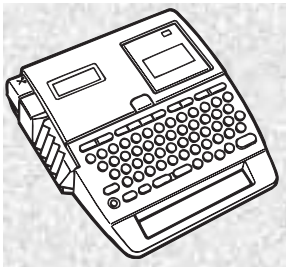

- Compact and portable - about the size of a standard mouse pad
- Eight resident bar codes
- Up to eight-line printing
- Four fonts
- Print preview
- Five tape widths from one-quarter inch to one inch
- Built-in address, warning, video and diskette label templates
- Over 200 clip-art images
- Tape sensor that automatically adjusts the labels text size and format to each tape size
- Prompts in English, Spanish, French and German
- Two-line display
- Operates on 6 AA batteries included
- Low battery detector
- Tape cartridge lengths: 26' per cartridge
- All tape cartridges come housed in snap-in/snap-out, interchangeable cartridges
- Thermal-transfer printing
- K750 Font and Bar-Code Specifications:
  Four fonts: Roman, Gothic, Helvetica and Script
  Seven type sizes: 6 through 48 point
- Thirteen typestyles: Normal, Condensed, Expanded, Outline, Bold, Shadow, Vertical, Italic, Bold Italic, Frame, Shade, Shaded Frame, Underline
- K750 Physical Specifications:
  Width: 7 1/4" (184 mm)
  Length: 7 7/8" (200mm)
  Depth: 2 1/4" (56 mm)
  Weight: 1 lb. 9 1/2 oz. (720g)

Part Number		Price per ea.
27-1421-K750	Kroy K750 Label Machine	208.05

KROY K4350 INDUSTRIAL 4" THERMAL PRINTER

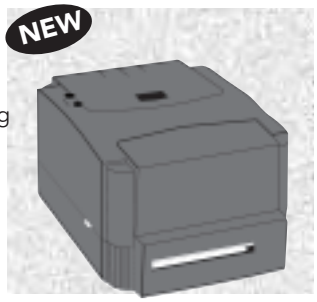

- High-resolution thermal-transfer and/or direct-thermal printing at 300dpi.
- Great for labeling and identifying equipment and machines.
- 1MB Flash, 2MB DRAM
- Rotary cutter included on K4350C.
- Real time clock, Black Mark Sensor
- Easy to load.
- Prints continuous-feed labels up to 38" (989mm) in length and up to 4.09" (104mm) in width.
- Prints on labels, shrink tubing, wire wraps, facility signs, health and safety signs and banners.
- Prints up to 2" per second at 300 dpi (12 dots/mm).
- Powerful label design software package including barcodes
- Fonts: Windows-based true-type fonts plus 5 Alphanumeric fonts.
- Bar-code include: Code 39, Code 93, Code 128UCC, Code 128, subsets A, B, C, Codabar, Interleave 2 of 5, EAN 8, EAN 13, EAN 128, UPC-A, UPC-E, EAN and UPC 2 digit add on.
- 2 Dimensional Barcodes including: PDF-417, Maxicode, Datamax.
- Interface: RS232 Serial and Centronics parallel.
- AC Power Adapter: 110/220 VAC +/- 10% single phase 60/50 Hz. Meets UL, CSA, & TUV-GS standards and FCC Class A & CE standards.

  Printer depth: 8.9" (226 mm)

  Printer height: 5.32 (135 mm)

  Printer weight: 4 Lbs. (1.81kg)

  Printer width: 7.9" (200 mm)

  Operating temperature: 40° F to 104° F (5° C to 40° C).

  Storage temperature: 14° F to 140° F (-10° C to 60° C).

  Humidity 10% to 90% non-condensing.

  Ventilation: free air.

  Limited Warranty: 1 year parts and labor; 90 day print head and software

Part Number		Price per ea.
27-1471-00	Kroy K4350 Industrial 4" Thermal Printer	560.00

Visit Our Web Site:
happcontrols.com
for NEW Product Updates!!

CITIZEN 3551 PRINTER

- Dot impact printing
- Auto winder option
- High-speed print (Bi-directional)
- Red and black print
- Auto load
- Paper end sensor
- Built in power supply
- Built in auto cutter – full cut (ACS-134)

Specifications:

Printing method	Dot impact
Printing direction	Bidirectional, 2-pass graphic unidirectional
Print width	Character type: 63.6 mm/Graphic type: 58.7 mm
Print head	9 pins
Print speed	Character type: Approx. 3.6 lines/second / Graphic type: Approx. 3 lines/second
Print columns	40 columns
Character size (W) x (H)	Character type: 1.36 mm x 2.4 mm (7 dots); 1.36 mm x 3.1 mm (9 dots) /
Graphic type:	1.20 mm x 2.4 mm (7 dots); 1.20 mm x 3.1 mm (9 dots)
Lines spacing	Character type: 4.23 mm (1/6 inch) / Graphic type: 2.82 mm (1/9 in)
Paper	Ordinary paper and non-carbon paper: 76 +/- 0.5 mm x 83 mm
Ink ribbon	Special purpose ribbon cartridge: red/black or single color (black or purple)
Interface	Serial (RS-232C), Parallel (CENTRONICS compliant)
Command system	CBM mode, STAR mode, ESC/POS mode. The user can select the mode with the DIP switch and present jumpers
Input buffer	6 kb or 256 bytes (selectable with the DIP switch)
Drawer function	2-drawer, 1-drawer switch
Auto loading function	Automatically feeds the paper by several lines when it is inserted
Paper end detection	Stops printing when the paper has run out
Paper near end detection	Stops printing when the paper is running out (settable with a command)
Auto cutter	AC-134-E (full cut)
Weight	Approx. 2.8 kg
Outer dimensions	160 x 212 x 173 mm (W) x (D) x (H)

Part Number		Price per ea.
70-1401-00	Citizen 3551 Printer	331.50

REPLACEMENT PRINTER RIBBONS

- Top quality at an economical price

Part Number	Description	Ref. No.	Ink Color	Price per ea.
95-1589-00	For Citizen Printers	IR-61 R/B	Red/Black	4.35
95-1588-00	For Epson Printers	ERC-23P	Purple	5.40
95-1588-01	For Epson Printers	ERC-23B	Black	5.40
95-1778-00	For NCR Printers	NCR2140	Purple	4.35
95-1776-00	For Okidata 100 Series Printer	————	Black	5.10
95-1777-00	For Star Micronics MP300, SP300 Printer	RC300B	Black	4.60
95-1577-00	For Telpar Printers	TERC-23P	Purple	6.45
95-1762-00	For Westrex 4000 Series Impact Printer	————	Black	5.70

BGP-2000 KIOSK PRINTER

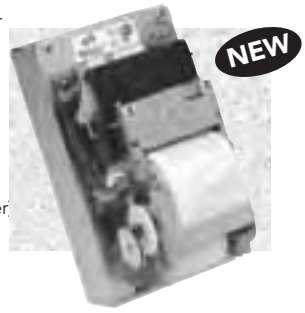

- Economical OEM style dot matrix kiosk printer
- Easy to use journal winder
- Plug & play capability
- Two color printing
- Semi automatic paper loading
- Economical
- Easy to use two ply paper journal winder
- 76 mm paper width (up to 89 mm roll diameter)
- One year warranty

Technical Specifications:

Printing	
Printing method	9-pin serial impact dot matrix
Print width	63 mm (2.48 in)
Print speed	3.2 lps printing, 14 lps paper feeding
Characters per line	12, 14, 20, 25, 28, and 40 cpi
Character set	ASCII, Code Page 850 (international)
Communication	
Interface	Parallel (CENTRONICS), Serial (RS-232)
Baud rate 19200 bps	configurable 110, 300, 600, 1200, 2400, 4800, 9600, or
Buffer	2 kbytes
Power Requirements	
Voltage	Full-range 95 VAC to 240 VAC
Frequency	50 Hz or 60 Hz
Consumption in standby	15 W; printing: 35 W
Environment	
Operating temperature	0 to 45 deg C (+32 to +114 F)
Storage temperature	-10 to +60 deg C (+14 to _140 F)
Operating humidity	10 to 80% RH, non condensing
Storage humidity	5 to 85% RH, non condensing
Reliability	
Print head MCBF	80,000,000 characters
Mechanism MCBF	4,000,000 lines
Cutter lifetime	500,000 cuts
Ribbon life	2,500,000 characters
Media	
Paper	
Paper width	76 mm
Number of plies	one or two plies
Maximum roll diameter	89 mm (3.5 in) external, 12 mm (0.5 in) core
Paper length	for 1-ply paper roll 76 m (250 ft); for 2-ply 38 m (135 ft)
Ribbon	
Ribbon type	Ir61
Color options	red/black, black or purple
Physical	
Height	177 mm (6.97 in)
Width	149 mm (5.87 in)
Depth	272 mm (10.71 in)
Weight	3.0 kg (6.61 lbs)

Part Number		Price per ea.
70-1402-00	BGP-2000 Kiosk Printer	433.50

DPI SPEAKERS

CARPETED SPEAKERS

- Polymer treated woofer and high dispersion, acoustical tweeter generates terrific sound
- Auto reset circuit breaker prevents speakers from blowing
- Attractive gray carpeting surrounds the speaker
- 3/4" MDF hardwood cabinet
- Smooth, professionally rounded edges on cabinet
- For specifications, see chart below
- Made in the U.S.A.
- 5 Year limited manufacturer's warranty

Part Number		Price per ea.
50-9983-00	8" 2-Way Carpeted Speaker, DPI-800C	62.75
50-9984-00	12" 3-Way Carpeted Speaker, DPI-1200C	140.95
50-3123-00	Plastic Corner for 8' Speaker	.25
50-3124-00	Plastic Corner for 12" Speaker	.30

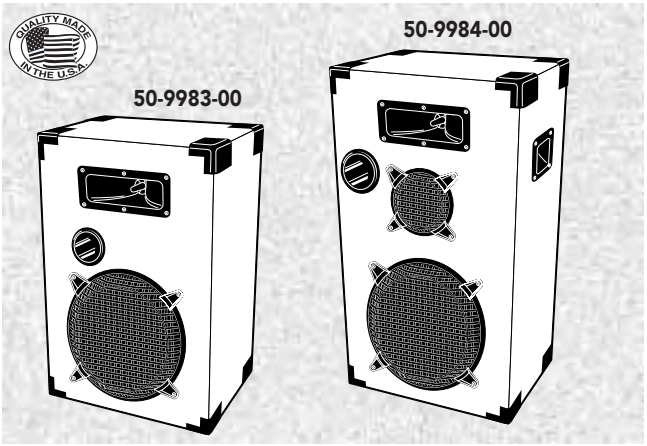

Part Number	50-9983-00	50-9984-00
Model Number	DPI-800C	DPI-1200C
Woofer	8" Polymer, Rolled Edge	12" Polymer, Rolled Edge
Midrange	—	5" Capton
Tweeter	2" x 5" Super Horn	3" x 7" Super Horn
Tuned Port	1-3/4" x 4"	2-3/4" x 5"
Impedance	8 Ohm	8 Ohm
Efficiency (1 wt. 1 mtr.)	87 dB	92 dB
Frequency Response	45-30,000 Hz	32-30,000 Hz
Crossover	(1) 5 w 20 Ohm Res.	(1) 100v Cap. (1) 5 w 20 Ohm Res.
Power	4-90 w, RMS	5-130 w, RMS
Maximum Input	180 watts	240 watts
Circuit Breaker	Auto Reset	Auto Reset
Dimensions	16" H, 10" W, 9-1/4" D	27" H, 15" W, 11-3/4" D
Cabinet	5/8" Carpet	5/8" Carpet
Grill	Steel Waffle	Steel Waffle
Weight	30 lbs./pair	36 lbs./each

INDOOR/OUTDOOR SPEAKERS

- Great for outdoor locations; bars, restaurants, boardwalks, even at home
- This versatile speaker has a powerful dome tweeter, mylar midrange and a polypropylene woofer bass that you can feel
- Black speakers come complete with mounting brackets and connecting cables
- Sold per pair
- Made in the U.S.A.
- 5 Year limited manufacturer's warranty

Part Number		Price per pair
50-9986-00	4" 3-Way Indoor/Outdoor Speaker, DPI-600WA	63.85

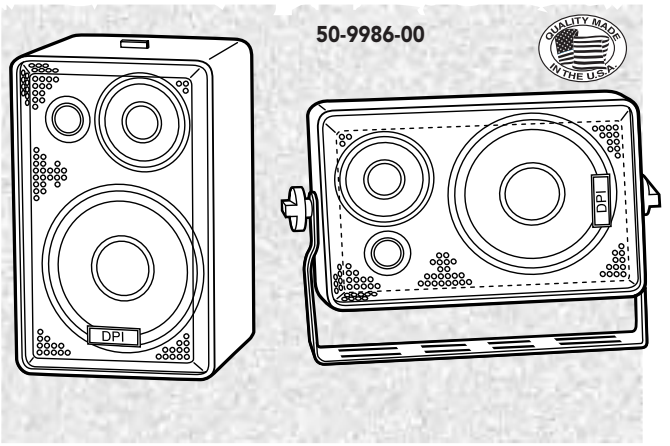

Part Number	50-9986-00
Model Number	DPI-600WA
Woofer	4" Polymer Edge
Midrange	2" Mylar Cone
Tweeter	3/4" Dome
Tuned Port	—
Impedance	6 Ohm
Efficiency (1 wt. 1 mtr.)	89 dB @ 1 w/m
Frequency Response	50-20,000 Hz
Crossover	900/3000Hz
Power	—
Maximum Input	50 watts
Circuit Breaker	—
Dimensions	7" H, 4-1/2" W, 4-1/8" D
Cabinet	Aluminum
Grill	Steel Mesh
Weight	6 lbs./pair

SPEAKER TRANSFORMER, 10 WATT

- 70.7V line continuous duty design
- Primary tapped for 0.625, 1.25, 2.5, 5 and 10W
- 2-3/8" mounting centers

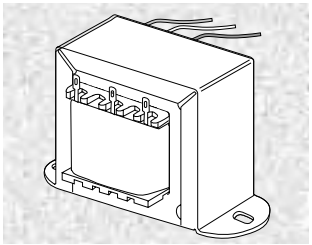

Part Number		Price per ea.	L/12
49-0784-00	Speaker Transformer, 10 Watt	6.75	6.15

SPEAKER TRANSFORMER, 25-50 WATT

- 70.7V line continuous duty design
- Primary tapped for 25-50 Watts
- Secondary is tapped for 4 and 8 Ohms
- 2-3/8" mounting centers

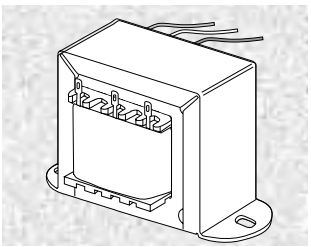

Part Number		Price per ea.	L/12
48-0016-00	Speaker Transformer, 25-50 Watt	7.30	6.15

© HAPP CONTROLS

MTX AAL SERIES SPEAKER SYSTEMS

- Incredible Sound-Maximum Value
- Sonic excellence for the audio enthusiast
- Crisp, clear sound-always!
- Fantastic bass performance
- FerroFluid cooled for maximum power handling
- Color: Warm Oak
- 10 year MTX warranty
- For Indoor / Outdoor speakers see page 277

MTX SERIOUS ABOUT SOUND™ AAL SERIES *HOME LOUDSPEAKERS*

Part Number		Price per L/1	L/2
96-0196-00	MTX AAL8 Speaker System	198.75 pair	186.70 pair
49-0771-00	MTX AAL10 Speaker System	144.55 ea.	132.50 ea.
49-0804-00	MTX AAL12 Speaker System	162.60 ea.	150.55 ea.
49-0776-00	MTX AAL15 Speaker System	198.75 ea.	186.70 ea.

REPLACEMENT PARTS FOR MTX SPEAKERS

Part Number		Price per ea.
49-0809-00	6 -1/2" Poly Woofer	47.05
49-0925-00	8" Woofer for AAL830 Speakers	70.45
49-0774-00	8" Coax High Compliance Speaker w/12 oz. Magnet	41.00
49-0775-00	8" Twin Cone Speaker w/12 oz. Magnet	30.80
49-0779-00	12" Poly Woofer	55.45
49-0778-00	15" Woofer Speaker w/40 oz. Magnet	87.95
30-0058-00	T-Bar Bridge for 8" Speaker	13.40
49-0781-00	Volume Control, White 25W (RMS)/75W Peak	53.15
GRI-1240A	Replacement Grill for AAL12	20.85

Part Number	96-0196-00	49-0771-00	49-0804-00	49-0776-00
Model Number New/Old	AAL8/AAL830	AAL10/AAL1030	AAL12/AAL1240	AAL15/AAL1540
System Type	8" 2-way	10" 3-way	12" 3-way	15" 3-way
Woofer	8" foam surround 1" voice coil	10" foam surround 1.5" voice coil	12" foam surround 1.5" voice coil	15" foam surround 2" voice coil
Midrange	3" cone sealed with ferrofluid	5" cone sealed with ferrofluid	one 3"& 5" cone sealed with ferrofluid	one 3" & 5"cone sealed with ferrofluid
Tweeter	2" x 6" horn-loaded quartz	2" x 6" horn-loaded quartz	2" x 6" horn-loaded quartz	2" x 6" horn-loaded quartz
Frequency Response	75Hz - 22kHz	55Hz - 22kHz	50Hz - 22kHz	40Hz - 22kHz
Sensitivity	91 dB	92 dB	92 dB	92 dB
Nom. Impedance	8 Ohm	8 Ohm	8 Ohm	8 Ohm
Power	50 w RMS / 100 w peak	75 w RMS / 150 w peak	100 w RMS / 200 w peak	125 w RMS / 250 w peak
Height	17-23/32"	23-7/32"	26-7/32"	28-7/32"
Width	10-15/32"	14-7/32"	14-26/32"	17-23/32"
Depth	8"	10"	11"	15"
Ship Weight	38 lbs (17.2kg) pair	33 lbs (15kg) each	39 lbs (17.7kg) each	58 lbs (26.3kg) each

SPEAKER WIRE

- 2 Wire
- Comes in spools of 250'
- Minimum order 250'

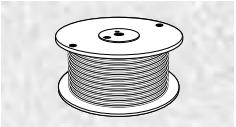

Part Number		Price per ft.	L/250	L/500
49-0483-00	14 Gauge Speaker Wire, Clear	.26	.24	
49-0534-00	18 Gauge Speaker Wire, Clear	.14	.13	
80-0149-00	Zip Cord 16 Gauge Speaker Wire, Clear	.21	.19	
49-0534-01	Zip Cord 18 Gauge Speaker Wire, Brown	.17	.15	

REMOTE HOOK-UP WIRE

- Gray plastic covering
- 22 gauge
- Available in 3 or 5 wire
- 500' per spool
- Minimum order 500'

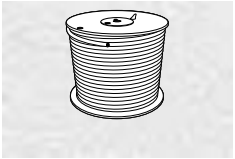

Part Number		Price per ft.	L/500	L/1000
49-0557-00	3-Wire	.18	.16	
49-0660-00	5-Wire	.24	.22	

SUPER DISPERSION CEILING SPEAKER SYSTEM

- A full range coaxial loudspeaker
- Unmatched sound dispersion and power capacity
- 4 strategically placed 8" transducers
- Omni-directional dispersion pattern reduces hot and cold spots
- Easy installation-simply rests on ceiling grid
- Color: Flat White or Black
- Made in the USA

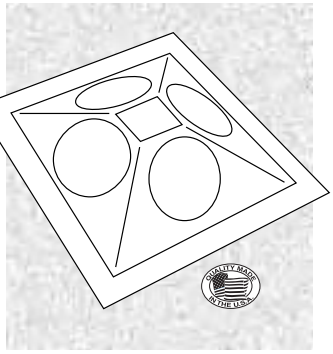

Part Number		Price per ea.	L/2
50-2056-00	Super Dispersion Ceiling Speaker System- Flat White	234.55	224.35
50-2056-0B	Super Dispersion Ceiling Speaker System- Black	234.55	224.35

SPECIFICATIONS	
Nominal Diameter:	8" (20.32cm)
Rated Impedance:	8 Ohms
Power Capacity:	80 watts continuous, 100 watts peak
Sensitivity:	97 dB spl. 1w 4ft
Frequency Response:	40 Hz - 18kHz +- 4dB
Components:	4 x 8" (20.32cm) low frequency transducer 4 x 3" (7.62cm) high frequency transducer
Crossover Frequency:	3 kHz
Voice Coil Diameter:	High Temp 1" (2.54cm) L.F. 9/16" (1.42cm) H.F.
Nominal Magnet Wt.:	10 oz. (.28kg) L.F. magnet, 2 oz. (.05kg) magnet
Transducer Depth:	3 1/8" (7.94cm)
Dimensions:	5-3/4" (14.6cm)H x 23-3/4" (60.32cm)W and L 4.13" (10.5cm) depth below ceiling surface
Net Wt.:	15.31 lbs (6.94kg) foam baffle 16.11 lbs (7.31cm) metal grille

8" CEILING SPEAKER W/TRANSFORMER

- 8" Dual Cone speaker with 10 oz. Magnet 70v or 25 v line input
- Transformer tapped for .63, 1.25, 2.5, 5 and 10 watts
- Round one-step contour flush mount ceiling baffle with white baked enamel finish
- Includes 4 white bolts and nuts for mounting

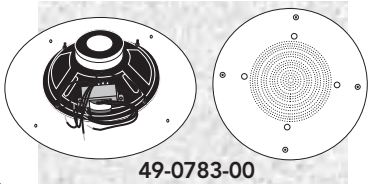

49-0783-00

50-9008-00

Part Number		Price per ea.
49-0783-00	8" Ceiling speaker w/10w Transformer	26.55
50-9008-00	8" Speaker only without Baffle	10.95
50-9008-10	Replacement Baffle	5.90

MTX OUTDOOR SPEAKERS

- Rated #1 outdoor speaker by Home Theater Magazine (April, 1998)
- Great for outdoor locations; bars restaurants, boardwalks, even at home
- Sleek, Euro-style design for aesthetic appeal to compliment any decor
- Weather resistant design utilizing Buthl surrounds with polypropylene cones
- Magnetically shielded

  Includes rotating mounting stainless steel brackets with end-caps
- Available in either white or black color
- 1 year limited MTX warranty

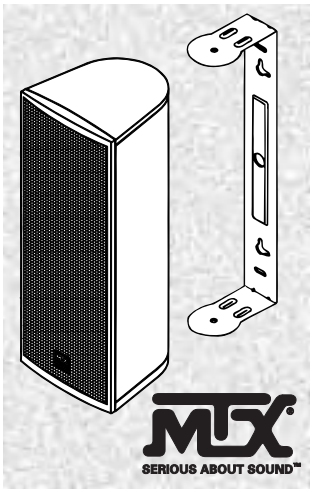

Part Number		Price per ea.
49-0780-00	White MTX speaker MP42W	104.00
49-0780-16	Black MTX speaker MP42BB	104.00

SPECIFICATIONS	
Woofer:	Two 4"
Tweeter:	1/2" balanced dome
Frequency Response:	100Hz - 20Hz
Impedance:	8 Ohm
Power:	50 w RMS/200 w Peak
Height:	12.6"
Width:	4.8"
Depth:	4.9"
Ship Weight:	9 lbs. (.4.1kg) magnet

3" SPEAKER WITH TWO MOUNTING FLANGES

- 4 Ohm / 15 watt
- Full range
- Two mounting flanges
- "+" terminal = .205"
- "-" terminal = .113"
- Used on Midway Games like: Crusin Exotica, Hydro Thunder, Off Road Thunder, Touchmaster
- 30 per box

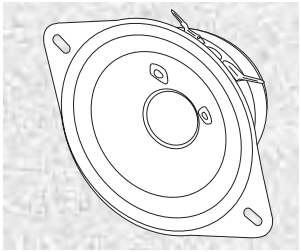

Part Number		Price per ea.
5555-16223-00	3" Speaker with Two Mounting Flanges	1.60

4" SPEAKER & GRILLE SYSTEM

- Black metal grille and 4" speaker molded into one unit
- 4" dual cone speaker with 3 oz. magnet
- Full range 30 watt speaker, 8 ohm
- .187" & .250" terminals
- 4 mounting holes are pre-drilled

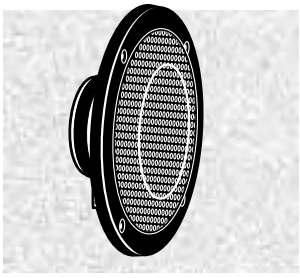

Part Number		Price per ea.
50-9007-00	4" Speaker & Grille System	9.20

© HAPP CONTROLS

SHIELDED SPEAKERS

2" SPEAKER

- 2" Diameter
- Full range
- .4 watt
- 8 ohm
- See chart for specifications

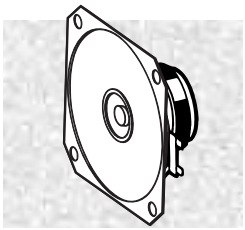

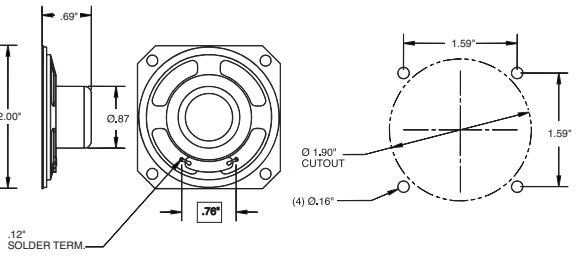

Part Number		Price per ea.	L/25
70-0014-00	2" Speaker, .4 Watt	3.50	3.15

3.5" SPEAKER

- 3.5" Diameter
- Speaker has a metal shield surrounding the magnet to prevent any interference with the monitor
- 4 OHM, 5 Watt Max.
- See chart for specifications

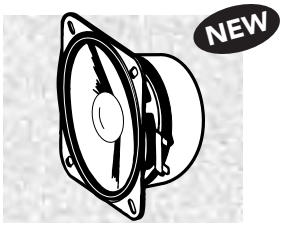

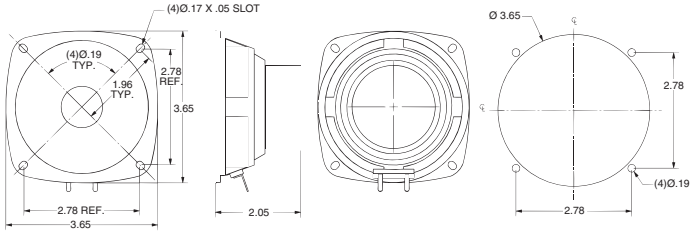

Part Number		Price per ea.	L/25
50-9000-01	3.5" Shielded Speaker, 5 Watt	4.40	3.65

4" SPEAKER

- 4" Diameter
- Speaker has a metal shield surrounding the magnet to prevent any interference to the monitor
- 8 ohm, 12 watt
- See chart for specifications

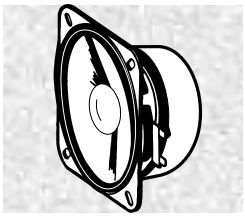

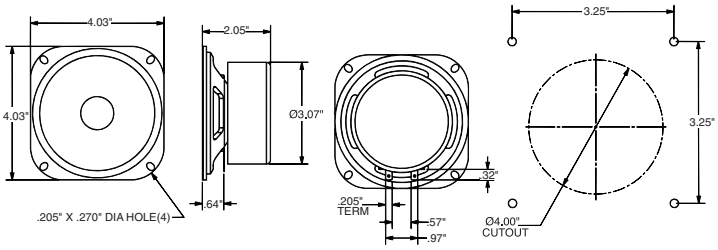

Part Number		Price per ea.	L/25
49-0228-00	4" Shielded Speaker, 12 Watt	10.05	9.05

5" SPEAKER

- 5" Diameter
- Speaker has a metal shield surrounding the magnet to prevent any interference to the monitor
- 8 ohm, 12 watt
- See chart for specifications

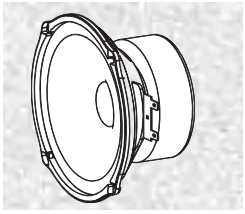

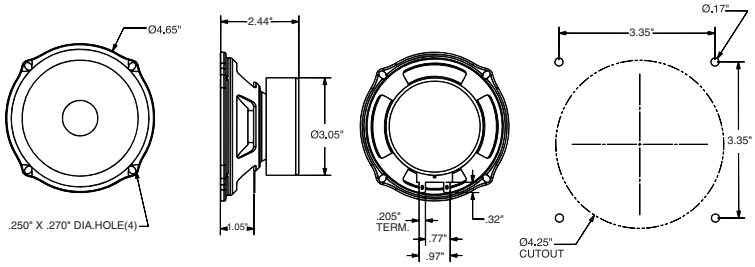

Part Number		Price per ea.	L/25
50-9005-00	5" Shielded Speaker, 12 Watt	10.40	9.80

SPECIFICATIONS

Part Number	Diameter in/(mm)	Height in/(mm)	Nom (Watt)	Max (Watt)	Ohms	Hz	Db	Range	Magnet	Net Weight	Frame	Diaphragm	Terminal Size (in)
70-0014-00	1.97/(50)	.75/(mm)	.2	.4	8	430	80	4,000	13mm x 10mm	40g	Square	Paper	solder
50-9000-01	3.5(93)	-	3	5	4	120	85	15,000	1.7 oz	-	Square	Paper	.250
49-0228-00	3.94(100)	1.93 (49)	4	12	8	180	71	12,000	6 oz	610g	Square	Paper	.250
50-9005-00	4.69(119)	2.13(54)	4	12	8	135	91	8,000	6 oz	610g	Pin Cushion	Paper	.250

4" ROUND SPEAKER GRILLE

- Metal mesh grille
- 4-1/2 center-to-center mounting holes
- Color: black

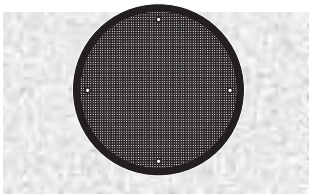

Part Number		Price per ea.
49-5181-00	4" Round Speaker Grille	4.00

4" SQUARE SPEAKER GRILLE

- Metal mounting frame
- Black plastic grille snaps onto metal mounting frame

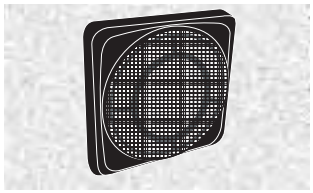

Part Number		Price per ea.
49-5182-00	Square Speaker Grille	4.00

UNSHIELDED SPEAKERS

4" SPEAKER

- 4" Diameter
- Full range
- 8 watt
- 8 ohm
- See chart for specifications

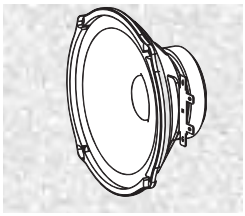

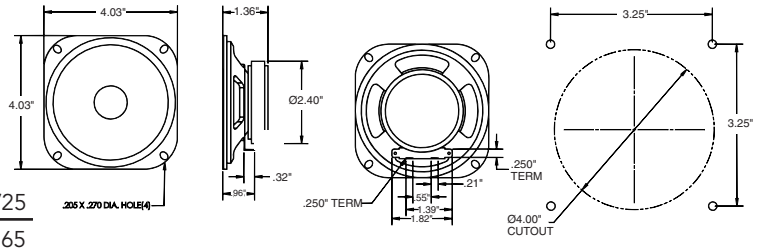

Part Number		Price per ea.	L/25
50-9000-00	4" Speaker, 8 watt	4.20	3.65

4" SPEAKER

- 4" Diameter
- Full range
- 12 watt
- 8 ohm
- See chart for specifications

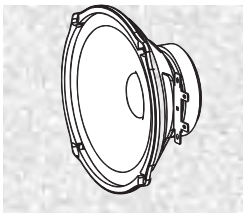

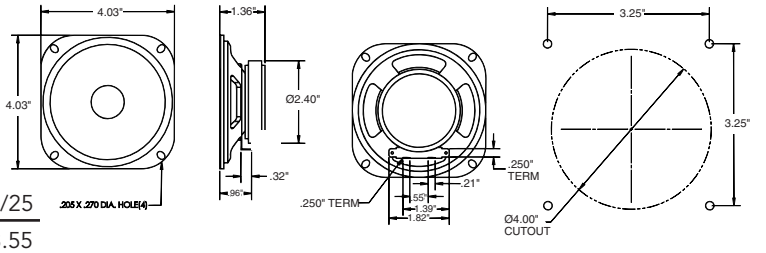

Part Number		Price per ea.	L/25
50-9002-00	4" Speaker, 12 watt	4.10	3.55

5" SPEAKER

- 5" Diameter
- Full range
- 8 watt
- 8 ohm
- See chart for specifications

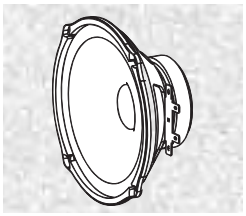

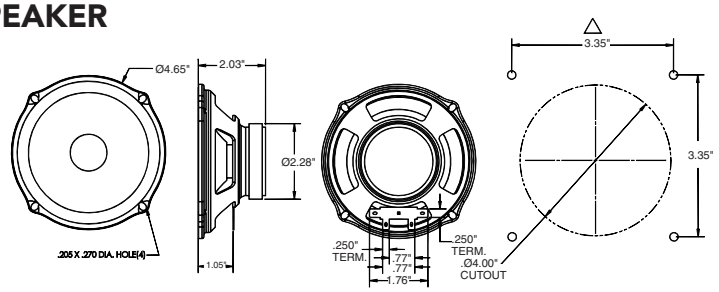

Part Number		Price per ea.	L/25
50-9003-205	5" Speaker, 8 watt	4.30	3.75

5" SPEAKER

- 5" Diameter
- Full range
- 12 watt
- 8 ohm
- See chart for specifications

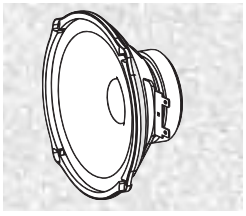

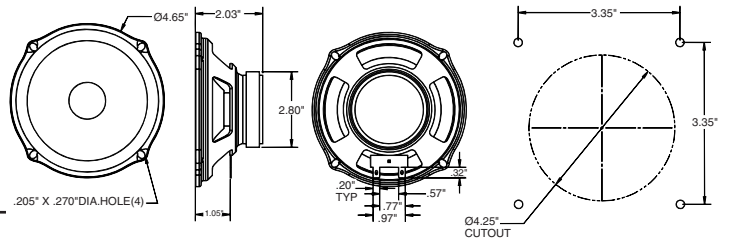

Part Number		Price per ea.	L/25
50-9004-00	5" Speaker, 12 watt	4.50	4.20

SPECIFICATIONS

Part Number	Diameter in/(mm)	Height in/(mm)	Nom (Watt)	Max (Watt)	Ohms	Hz	Db	Range	Magnet	Net Weight	Frame	Diaphragm	Terminal Size (in)
50-9000-00	3.94(100)	1.42(36.1)	2	8	8	160	89	14,000	3 oz	280g	Square	Paper	.205/.250
50-9002-00	3.94(100)	1.66(42.1)	4	12	8	160	90	15,000	6 oz	388g	Square	Paper	.205/.250
50-9003-205	4.73(120)	1.67(42.5)	2	8	8	135	91	15,000	3 oz	265g	Pin Cushion	Paper	.205/.250
50-9004-00	4.73(120)	1.92(48.8)	4	12	8	135	91	8,000	6 oz	440g	Pin Cushion	Paper	.250

PAS AUDIO ACTIVATED LINE LEVEL SWITCH

Allows you to play audio as follows:

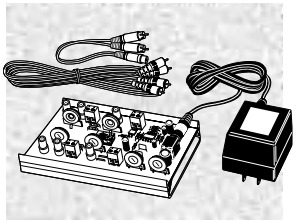

- Play a background tuner (tape) through the CD jukebox amplifier and speakers
- Play the jukebox through a mono background music amplifier and speakers using a 70 V feed
- Play the jukebox through a stereo receiver (amplifier) using a 70 V feed
- Play the jukebox through a stereo receiver (amplifier) using line level feed
- Silences a stereo receiver (amplifier) during jukebox play but not play the jukebox through the stereo receiver (amplifier)
- Has "RCA" jacks for jukebox / device to plug into

Part Number		Price per ea.
95-0784-00	PAS Audio Activated Line Level Switch	80.15

ROWE CD-100 TITLE STRIP CARDS

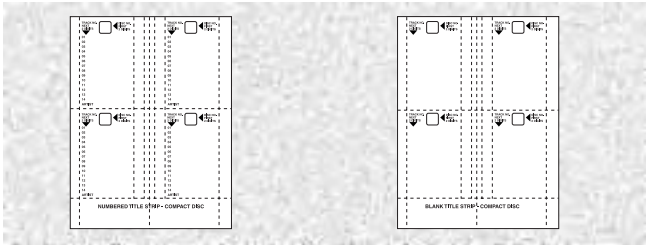

- Four titles per card

Part Number		Price per ea.	L/50
30935904	Title Strip Cards, Blank	.43	.41
30935903	Title Strip Cards, Numbered	.70	.65

ROWE TITLE PAGE FOR CD-100

- For use on Rowe CD-100 jukeboxes
- 6 titles per page
- Durable white plastic

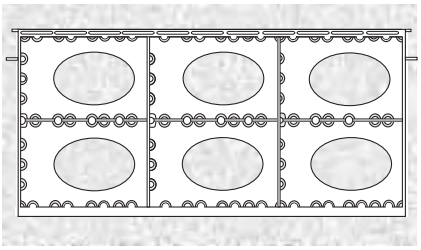

Part Number		Price per ea.
61094202	Rowe Title Page for CD-100	14.85

SINGLE CHANNEL REMOTE VOLUME CONTROL WITH CANCEL BUTTON

- For Rowe Jukeboxes
- Also works on Rockola Models 3000, 4000, 5000, 6000
- Cancel button to reject current play

Part Number		Price per ea.
H30632201R	Single Channel Remote Volume Control With Cancel Button	43.75

AUDIO ACTIVATED SPEAKER (MUTE) SWITCH

Allows you to mute or play speakers as follows:

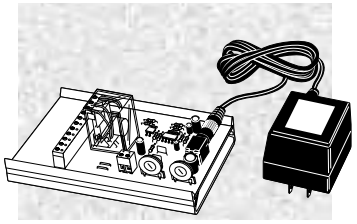

- Silences background music during jukebox play but preserves paging function
- Silences a stereo system during jukebox play
- Plays the jukebox through stereo system speakers
- Silences a mono background music system during jukebox play
- Plays a jukebox through a mono music system
- Adjustable delay from zero to three minutes
- Speaker wire is attached via screw down terminal strip. RCA jack version also available (95-0784-00)

Part Number		Price per ea.
95-0698-00	Audio Activated speaker (mute) switch	72.15

ROWE R-89 SELECTION OVERLAY

- Replace your old, cracked, worn out or torn overlay panel with this new overlay
- This part is no longer manufactured by Rowe
- Red with black lettering
- For use on Rowe R-89 Jukebox

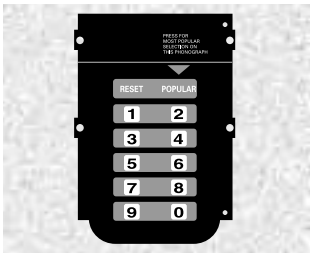

Part Number		Price per ea.
27-1058-00	Rowe R-89 Selection Overlay	48.25

PHONOGRAPH NEEDLES

- Direct replacement for original phonograph needles
- Top quality diamonds and sapphire for long life
- Hand crafted workmanship protects records from damage

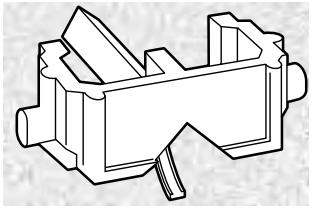

Part Number	Manufacturer & Models	Price per ea.
49-0545-00	Shure Blue Diamond Needle N44C For Rowe-AMI and Rock-Ola	27.30
95-0619-00	Economy Diamond Needle For Rowe-AMI Series R83-R92	10.00

DUAL CHANNEL REMOTE VOLUME CONTROL WITH CANCEL BUTTON

- For Rowe Jukeboxes
- Two separate volume controls allows you to "balance" the sound
- Cancel button to reject current play

Part Number		Price per ea.
H30632209R	Dual Channel Remote Volume Control	81.40

THE SOLUTION-FLOOR

Are you having a problem getting your pre-1997 NSM floor jukeboxes to accept the newer currency? Well, Happ Controls has The Solution to your problem. Now you can update your pre-1997 NSM floor jukeboxes to accept the new currency.

Introducing: The Solution- Floor, our NSM upgrade kit.

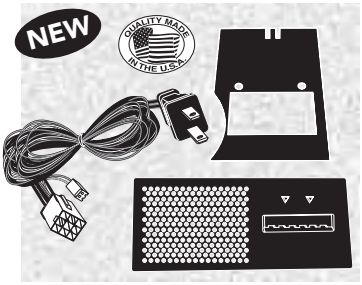

- Now you can update your pre-1997 NSM floor jukeboxes to accept the new currency
- Everything you need for an easy and fast installation, no cutting or drilling
- Only 3 tools needed: Phillips screwdriver, 5.5mm & 11/32" nutdrivers
- Kit is designed to accept a Mars validator with upstacker
- Provides higher revenues and fewer service calls
- Proudly made in USA
- Now you can experience the reliability you have come to expect from Mars bill validators
- Higher acceptance = higher revenues with Mars bill validators

Kit Includes everything you need for an easy and fast installation:

Mounting plates, hardware, labels, and complete instructions

Part Number		Price per ea.
40-0691-00	The Solution-Floor NSM upgrade kit	99.99
40-0691-10	The Solution-Floor NSM upgrade kit withMars AE2451U7 E $1, $2 & $5 w/700 bill capacity upstacker	499.99

Optional Bill Validators Available

42-6935-00	Mars AE2451U5E $1, $2 & $5 w/500 bill capacity upstacker	439.90
42-2054-00	Mars AE2451U7E $1, $2 & $5 w/700 bill capacity upstacker	463.05

SKIPDOCTOR CD REPAIR TOOL

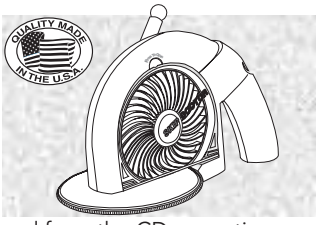

- Made in USA
- Repair CD scratches
- Radial resurfacing action removes or reduces the severity of harmful abrasions, scratches and other surface imperfections
- Provides the perfect control so that the right amount of material is removed from the CD every time
- Also repairs DVDs, and Play Station games

Part Number		Price per ea.
27-1423-00	Skip Doctor CD Repair Tool	34.99

MOTORIZED SKIPDOCTOR CD REPAIR TOOL

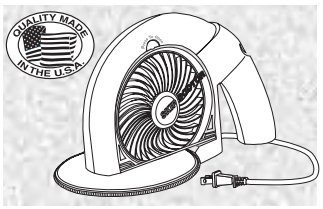

- Made in USA
- Added convenience of an electric motor
- Repair CD scratches
- Radial resurfacing action removes or reduces the severity of harmful abrasions, scratches and other surface imperfections
- Provides the perfect control so that the right amount of material is removed from the CD every time
- Also repairs DVDs, and Play Station games

Part Number		Price per ea.
27-1423-01	Motorized Skip Doctor CD Repair Tool	54.99

THE SOLUTION

Are you having a problem getting your older wall mount NSM jukeboxes to accept the newer currency? Well, Happ Controls has The Solution to your problem. Now you can update your older NSM wall mount jukeboxes to accept the new currency, dollar coin, and the quarter.

NEW

Introducing: The Solution, our attractive streamline side mount kit.

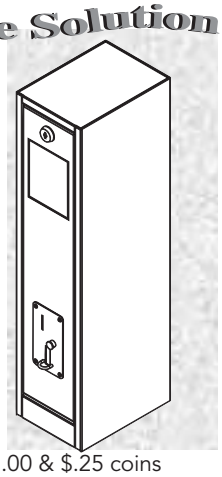

- Now you can update your older pre-5.1 NSM wall mount jukeboxes to accept the new currency, dollar coin, and the quarter
- Everything you need for an easy and fast installation in less than 15 minutes
- Provides higher revenues and fewer service calls
- Easier collections
- Bill validator not included
- Now you can experience the reliability you have come to expect from Mars validators
- This product is intended to be used with MARS AE2400 or AE2600 upstacker, 110 vac, sold separately
- Utilizes Imonex R9 roll down acceptor for $1.00 & $.25 coins
- Dimensions: 23.50" H x 7.56" D x 5.50" W

Kit Includes everything you need for an easy and fast installation:

Enclosure box, mounting hardware, lock & key, metal blanking plates, Imonex R9 roll down acceptor

Part Number		Price per ea.
40-0675-10	The Solution Side Mount Kit	241.50

Optional Bill Validators Available

42-7434-00	Mars AE2411U5E $1& $5 w/500 bill capacity upstacker	439.90
42-7310-00	Mars AE2611U7E $1, $5, $10 & $20 w/700 bill capacity upstacker	524.00

CD-PRO II PLAYER FOR NSM JUKEBOXES

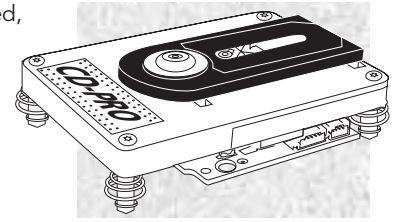

- Replaces CDM-12 or CD-PRO players
- Comes with NSM hub installed, but will also work with all other models
- 1 Year Warranty
- Does not replace CDM-3 or CDM-4 players
- Brand new players all quality checked by NSM technicians
- Manufactured by Philips

Part Number		Price per ea.
95-1683-00	Cd-Pro II Player	386.60
95-2184-00	Replacement Hub For Rowe	9.65

happcontrols.com

© HAPP CONTROLS

JUKEBOX CD PLAYER UPGRADE KIT FOR ROWE CDM 3

- Drop-in replacement at location
- High quality Sanyo player utilizing Sony technology virtually eliminates skipping of CDs
- Manufacturers Warranty
  - 1 year on decoder board
  - 2 years on CD player
- 24 hr. tech support
- Lower your investment costs
- New universal lightweight hub
- Easy installation (under 30 minutes)
- Made in USA by Digital Micro

Kit Includes:

Sanyo CD Player (95-2001-00)
Decoder board
Hub
Universal lightweight spindle
Mounting hardware

Part Number		Price per ea.
95-1997-00	Jukebox CD Player Upgrade Kit For Rowe CDM 3	395.00
95-2001-00	Replacement CD Player for Kit	79.99

JUKEBOX CD PLAYER UPGRADE KIT FOR ROWE CDM 4 OR CDM 12

- Drop-in replacement at location
- High quality Sanyo player utilizing Sony technology virtually eliminates skipping of CDs
- Manufacturers Warranty:
  - 1 year on decoder board
  - 2 years on CD player
- 24 hr. tech support
- Lower your investment costs
- New universal lightweight hub
- Easy installation (under 30 minutes)
- Made in USA by Digital Micro

Kit Includes:

Sanyo CD Player (95-2001-00)
Decoder board
Hub
Universal lightweight spindle
Mounting hardware

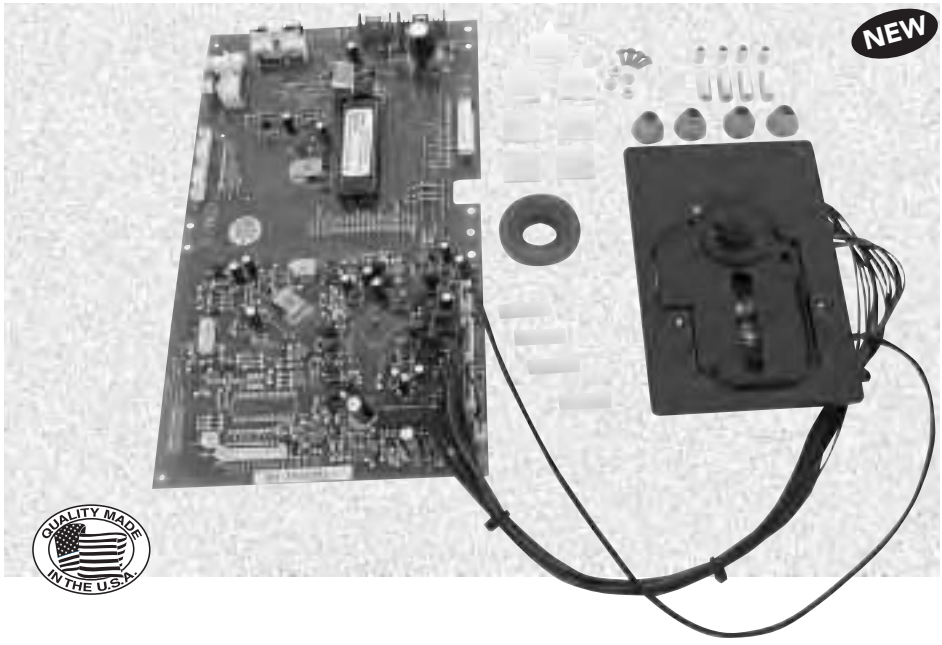

Part Number		Price per ea.
95-1998-00	Jukebox CD Player Upgrade Kit For Rowe CDM 4 or CDM 12	395.00
95-2001-00	Replacement CD Player for Kit	79.99

JUKEBOX CD PLAYER UPGRADE KIT FOR NSM CDM 4

- Drop-in replacement at location
- High quality Sanyo player utilizing Sony technology virtually eliminates skipping of CDs
- Manufacturers Warranty:
  - 1 year on decoder board
  - 2 years on CD player
- 24 hr. tech support
- Lower your investment costs
- New universal lightweight hub
- Easy installation (under 30 minutes)
- Made in USA by Digital Micro
- 90 Day Satisfaction Guarantee
- Receive a free replacement CD player (95-2001-51) with every 8 Kits Purchased

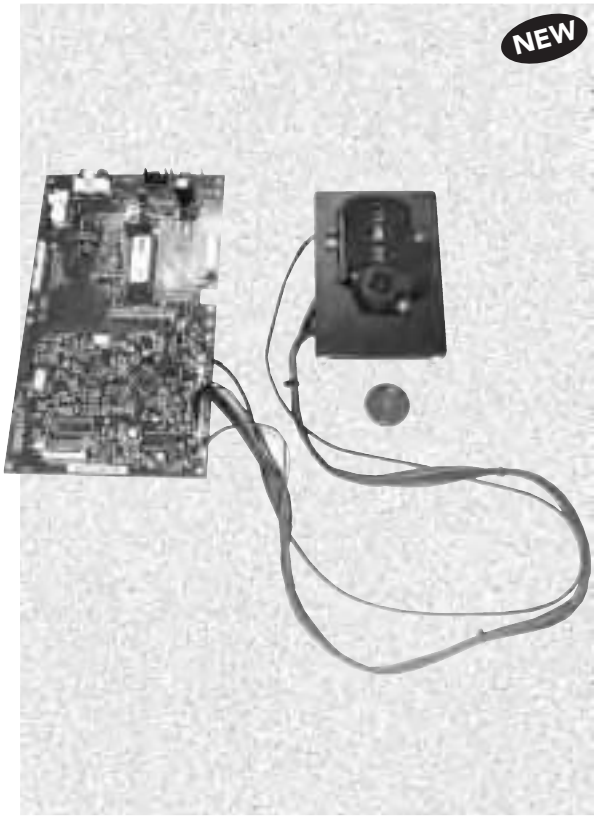

Kit Includes:

- Sanyo CD Player (95-2001-51)
- Decoder board
- Hub
- Universal lightweight spindle
- Mounting hardware

QUALITY MADE IN THE U.S.A.

Part Number		Price per ea.
95-1998-50	Jukebox CD Player Upgrade Kit For NSM CDM 4	395.00
95-2001-51	Replacement CD Player for Kit	81.60

JUKEBOX CD PLAYER UPGRADE KIT FOR NSM CDM 3

- Drop-in replacement at location
- High quality Sanyo player utilizing Sony technology virtually eliminates skipping of CDs
- Manufacturers Warranty
  - 1 year on decoder board
  - 2 years on CD player
- 24 hr. tech support
- Lower your investment costs
- New universal lightweight hub
- Easy installation (under 30 minutes)
- Made in USA by Digital Micro
- 90 Day Satisfaction Guarantee
- Receive a free replacement CD player (95-2001-50) with every 8 Kits Purchased

QUALITY MADE IN THE U.S.A.

Kit Includes:

- Sanyo CD Player (95-2001-50)
- Decoder board
- Hub
- Universal lightweight spindle
- Mounting hardware

Part Number		Price per ea.
95-1997-50	Jukebox CD Player Upgrade Kit For NSM CDM 3	395.00
95-2001-50	Replacement CD Player for Kit	81.60

© HAPP CONTROLS

REPLACEMENT PARTS FOR ROWE JUKEBOX

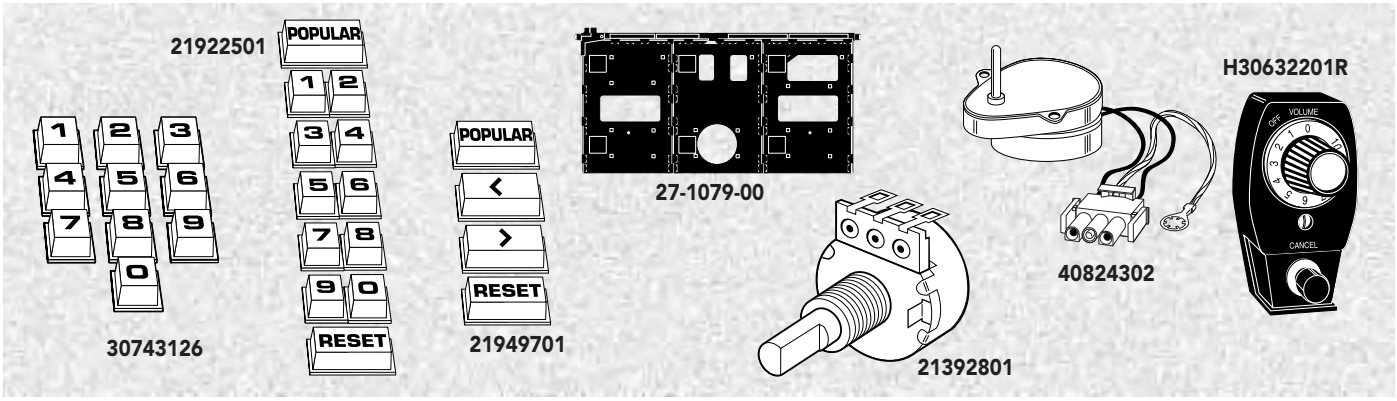

Part Number		Price per ea.
H30632201R	Single Volume Control	43.75
H30632209R	Dual Volume Control	81.40
20029501	Starter sockets	4.90
21072602	Reed switch	3.75
21073101	Switch	3.60
21082901	Actuator switch	3.00
21085701	Plunger assembly	8.40
21150510	Solenoid assembly	45.85
21318902	Insulator	.73
21520702	50K Pot	5.55
21712701	Latch assembly	13.90
21773302	Switch	4.90
21810901	Solenoid assembly	28.75
21816001	Sprag lever assembly	6.55
21816103	Stem Bushing	1.30
21862201	Lamp (#73) and Socket Assy.	2.50
21865303	Pivot link	2.40
21869801	Switch, housing assembly	13.10
21897301	O-Ring belt	2.95
21922501	Button Set, horizontal popular & reset	44.65
21940101	Grommet	2.85
21949701	Pushbutton Kit Reset	15.10
219601-02	CD Hold Down Hub & Basket	23.95
21960201	Cork Washer	1.55
21968301	Blockout retainer	3.00
25096101	Foam block	5.00
25175702	Photo detector with terminal	30.35
30628501	10K Ohm pot (21994602)	16.30
30656905	Microphone	89.00
30702601	Cloth cash bag	12.50
30743126	Button set, number 0-9	34.35
30743207	Reset button Popular button	4.90 3.75
30790502	Rotator assembly, left	4.25
30793301	Sprag wheel hub	2.15
30793901	Sprag plate	17.55
30837101	Keyboard switch	3.75
30838126	Number button set	36.15
30866501	Orange lens cover	1.45
30866502	Blue lens cover	1.40
30866504	Purple lens cover	1.15
30866505	Red lens cover	1.30
30901426	Number strip (set)	57.35
30902401	Readout card	26.95
30906801	Optic switch	68.45
30929201	Spacer	2.70
30930501	Harness	16.95
30930601	CD power harness	18.00

Part Number		Price per ea.
30930701	Harness assembly, mech	33.25
30931601	Guide reject bracket for CD	7.00
30932203	Lever Mech Release For 100 Series Jukebox	10.15
309339-02	CD51 3 page title holder-black	16.35
30933903	Page & clip assy for CD-100, red	9.45
309339-04	Page & clip assy- black	7.90
30934902	Selector graphics card	6.75
30935903	CD title strip cards, numbered (4 per card)	.70
30935904	CD title strip cards, blank	.43
30936301	Motor gear assembly For CD-100	148.25
30956301	Piston support kit	4.30
30979901	Title page bearing	1.50
35027705	Lock bar assembly	60.05
35082402	Optic switch	29.70
40710105	Drive board for CD	123.45
40714908	Pneumatic spring	42.95
40720401	Cam gear	7.30
40720802	Motor and cam assembly	127.65
40721702	Tone arm assembly	301.20
40722301	Wheel sprag	3.15
40722701	Magazine motor	139.10
40824302	Animation motor & harness	39.80
40830401	CD transformer	52.35
40833802	Title racks	6.15
40834701	Center page guide	7.85
40835401	Number strip for CD-100	7.60
40835602	Service switch	48.25
408483-01	Title page knob	1.95
45073506	Lower harness, CD jukebox	85.60
54801840	Fluorescent Lamp Socket	14.55
61078901	Title Pages, 4 titles per page	11.25
61094201	Title pages for CD-100 Models F&G Models F&G	13.25
65067701	Holder assembly	24.75
27-1058-00	Overlay panel graphic for R-89	48.25
27-1079-00	Page & clip assy for CD jukebox Models A-E	9.15
27-1159-00	Caster & Cup Assembly	42.25
49-1339-00	Money counting meter 24VDC 6-digit (21538302)	22.15
C033A	Key	2.50
C256A	Key	2.50
C415A	Key	2.50
C92A	Key	2.50
C94A	Key	2.50
H60326705R	Coin Door	38.55

KIOSK AUDIO AMPLIFIER KIT

- Ideal to amplify audio for use within a Kiosk environment
- 2 channel amplifier
- Approx. 8 watts RMS per channel 10% THD (10 watts RMS @ 16v input)
- Volume control can be easily adjusted with fingers
- Compact size: 4.25" L x 3.38" W x 2.24" H
- Mounts easily to vertical or horizontal surfaces within cabinet
- Power input: +12vdc to +18vdc minimum 1.5a with either a 2mm coaxial power jack or .100" center locking header connector
- Audio input: 3.5mm male stereo jack
- Audio output: 6' long speaker harness with .205" female quick disconnect terminals

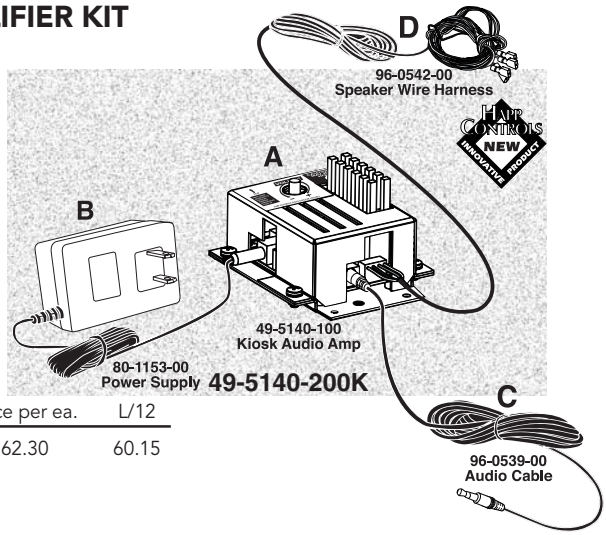

Part Number		Price per ea.	L/12
49-5140-200K	Kiosk Audio Amplifier Kit Kit Includes: A. Audio Amplifier with enclosure (49-5140-100) B. Plug-in power supply +12vdc 2amp (80-1153-00) C. Audio input cable, stereo 3.5mm male to 3.5mm male, 6' long (96-0539-00) D. Speaker harness, audio amplifier to speakers, 6' long with .205" female quick disconnect terminals (96-0542-00)	62.30	60.15
49-5140-100K	Kiosk Audio Amplifier Kit Same as 49-5140-200K above without (C) Audio Input Cable (96-0539-00)	63.15	60.85

Mounting Dimensions with Enclosure

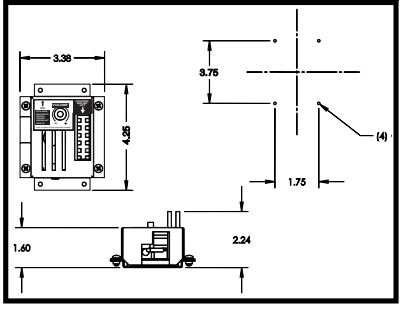

KIOSK AUDIO AMPLIFIER

- 2 channel amplifier
- Approx. 8 watts RMS per channel 10% THD (10 watts RMS @ 16v input)
- Volume control can be easily adjusted with fingers
- Compact size: 4.25" L x 3.38" W x 2.24" H
- Power input: +12vdc to +18vdc minimum 1.5a with either a 2mm coaxial power jack or .100" center locking header connector (Optional Happ Controls plug-in power supply available, part number 80-1153-00)
- Audio input: 3.5mm stereo jack
- Ideal to amplify audio for use within a Kiosk environment
- Audio output: .100" center locking header connector

49-5140-100 With Enclosure

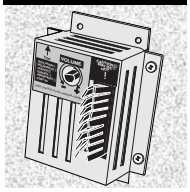

49-5140-00 Without Enclosure

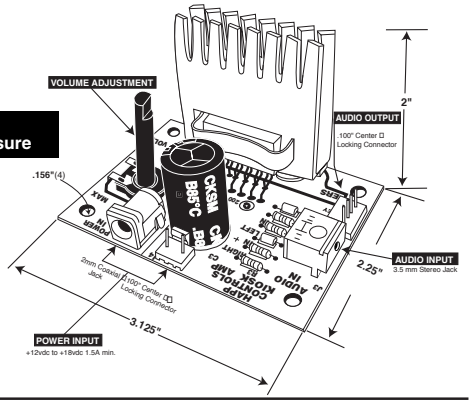

Part Number		Price per ea.	L/12
49-5140-100	Kiosk Audio Amplifier With Enclosure	41.35	37.90
49-5140-00	Kiosk Audio Amplifier W/O Enclosure	32.65	29.30

ACCESSORIES FOR AUDIO AMPLIFIER

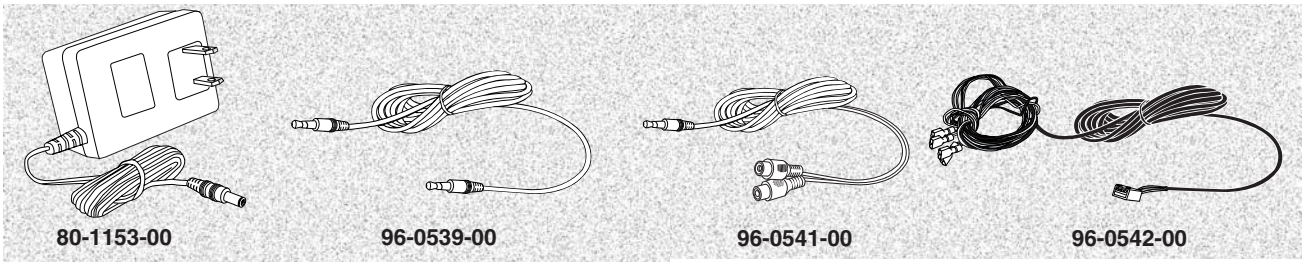

Part Number		Price per ea.	L/12
80-1153-00	Plug-in power supply +12vdc 2 amp	12.35	11.25
96-0539-00	Audio input cable, stereo 3.5mm male to 3.5mm male, 6' long	2.65	2.55
96-0541-00	Audio input cable, stereo 3.5mm male to left & right RCA female 6' long	4.10	3.90
96-0542-00	Speaker harness, audio amp. to speakers with .205" female quick disconnects, 6' long Speakers can be up to 60" apart	8.70	8.35

© HAPP CONTROLS

Pinball Rubber Sizing Chart

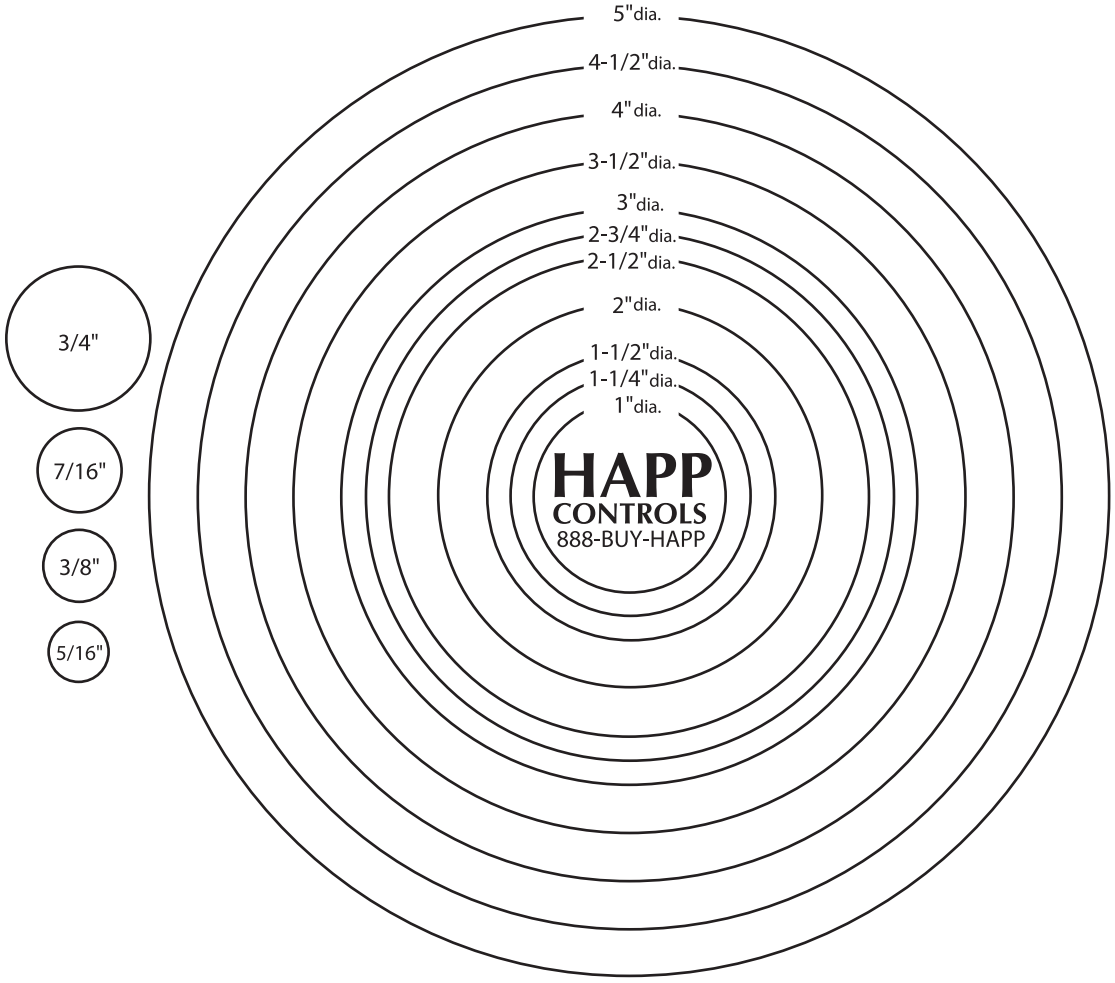

PINBALL RUBBER

- Made of pure gum rubber
- **Best** quality for long life
- Custom designs available
- Flipper rubber, ball shooter tip and playfield rubber in super - durable BLACK rubber or WHITE rubber

RUBBER RINGS

- Sized by inner diameter
- All rings have 1/4" rubber section size
- Color: Black or White

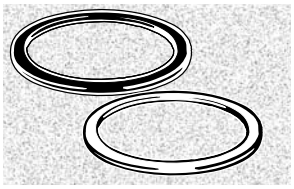

RUBBER RINGS

Part Number	ID	Color	Hardness	Price per ea.	L/100
25-1020-06HD	3/8"	Black	50 Durometer	.24	.22
25-1040-06HD	3/4"	Black	50 Durometer	.31	.26
25-1050-06HD	1"	Black	50 Durometer	.42	.38
25-1060-06HD	1-1/4"	Black	50 Durometer	.30	.26
25-1070-06HD	1-1/2"	Black	50 Durometer	.42	.34
25-1080-06HD	2"	Black	50 Durometer	.46	.42
25-1090-06HD	2-1/2"	Black	50 Durometer	.53	.48
25-1095-06HD	2-3/4"	Black	50 Durometer	.70	.64
25-1100-06HD	3"	Black	50 Durometer	.63	.56
25-1200-06HD	3-1/2"	Black	50 Durometer	.66	.59
25-1250-06HD	4"	Black	50 Durometer	.70	.65
25-1300-06HD	4-1/2"	Black	50 Durometer	.73	.64
25-1018-01	7/32"	White	45 Durometer	.39	.36
25-1020-01	3/8"	White	45 Durometer	.27	.27
25-1040-01	3/4"	White	45 Durometer	.31	.26
25-1050-01	1"	White	45 Durometer	.42	.38
25-1060-01	1-1/4"	White	45 Durometer	.30	.26
25-1070-01	1-1/2"	White	45 Durometer	.42	.34
25-1080-01	2"	White	45 Durometer	.46	.42
25-1090-01	2-1/2"	White	45 Durometer	.53	.48
25-1100-01	3"	White	45 Durometer	.63	.56
25-1200-01	3-1/2"	White	45 Durometer	.66	.59
25-1250-01	4"	White	45 Durometer	1.55	1.35
25-1300-01	4-1/2"	White	45 Durometer	1.05	.81

BUMPER POST RINGS

- For plastic bumper posts
- Sized by inner diameter
- Color: Black or White

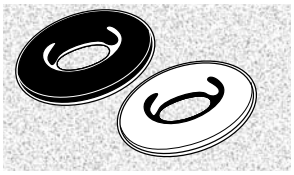

Bumper Post Rings

Part Number	ID	Rubber Diameter	Color	Hardness	Price per ea.	L/100
25-1010-06HD	5/16"	3/16"	Black	50 Durometer	.26	.24
25-1030-06HD	7/16"	3/16"	Black	50 Durometer	.25	.22
25-1280-06HD	5/16"	7/32"	Black	50 Durometer	.25	.22
25-1290-06HD	3/16"	7/32"	Black	50 Durometer	.21	.19
25-1010-01	5/16"	3/16"	White	45 Durometer	.38	.32
25-1030-01	7/16"	3/16"	White	45 Durometer	.25	.22
25-1280-01	5/16"	7/32"	White	45 Durometer	.29	.26
25-1290-01	3/16"	7/32"	White	45 Durometer	.21	.19

MINI POST RUBBER

- For 5/32" metal posts
- Sized by outer diameter
- Color: Black or White

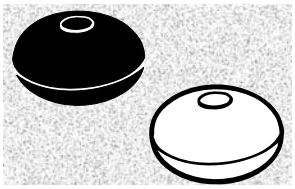

Mini Post Rubber

Part Number	OD	Color	Hardness	Price per ea.	L/100
25-1260-06HD	3/8"	Black	50 Durometer	.19	.17
25-1270-06HD	7/16"	Black	50 Durometer	.19	.17
25-1260-01	3/8"	White	45 Durometer	.19	.17
25-1270-01	7/16"	White	45 Durometer	.19	.17

FLIPPER RUBBER/MINI-FLIPPER RUBBER

- Color: Black, Red, Yellow

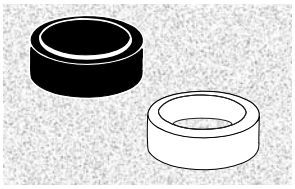

Flipper Rubber/Mini-Flipper Rubber

Part Number	Size	Color	Hardness	Price per ea.	L/100
25-1338-00	1-1/2" x 3/8"	Red	45 Durometer	.86	.79
25-1000-06HD	1-1/2" x 1/2"	Black	60 Durometer	.66	.52
25-1000-00	1-1/2" x 1/2"	Red	45 Durometer	.66	.52
25-1000-05	1-1/2" x 1/2"	Yellow	45 Durometer	.66	.52
25-1001-06HD	1" x 1/2"	Black	Mini-Flipper 60 Durometer	.50	.40

RUBBER BUMPER SLEEVES

- Color: Black or Yellow

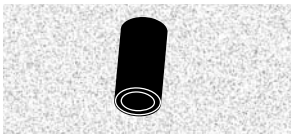

Rubber Bumper Sleeves

Part Number	Williams P/N		Price per ea.
50-2033-00	23-6556	Black Rubber Bumper Sleeve 1/2" OD x .260 ID x 7/8" L	.48
50-2033-05	23-6552	Yellow Rubber Bumper Sleeve 1/2" OD x .260 ID x 7/8" L	.52

BALL SHOOTER TIPS

- Made with internal chamfer to fit shooter rod exactly

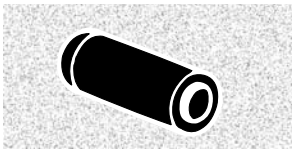

Ball Shooter Tips

Part Number	Color	Hardness	Price per ea.	L/100
25-1349-06	Black	60 Durometer	.32	.27

© HAPP CONTROLS

YELLOW TAPERED RUBBER BUMPER

- 3/4" size
- Yellow rubber
- Minimum order 10

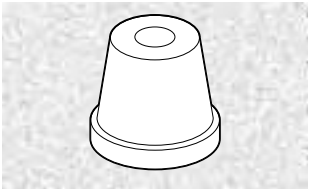

Part Number		Price per ea.	L/100
236579	Tapered Yellow Bumper	1.55	1.45

PLAYFIELD POST CAPS

- Black Playfield post cap and White Playfield post cap

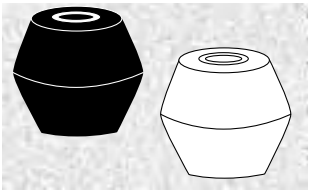

Part Number		Price per ea.	L/100
49-0766-06	Black Playfield Post Cap	.16	.14
49-0766-00	White Playfield Post Cap	.16	.14

PINBALLS

- Protect your playfield – replace pinballs at the slightest hint of pitting, rust or other imperfections
- Two sizes available
- Material: Steel

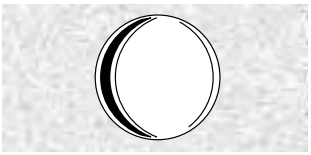

Part Number		Price per ea.	L/25
49-0587-00	1-1/16" Steel	1.80	1.65
20-6520	3/4" Steel	1.80	1.65

TILT/PLUM BOB ASSEMBLY

- Commonly used in all pinball machines
- Adjustable sensitivity, just lower or raise the center plumb bob
- Includes all items pictured

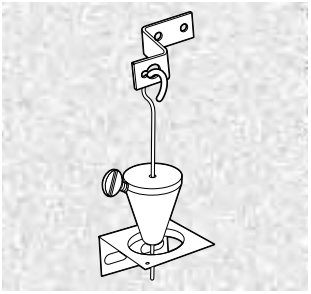

Part Number		Price per ea.	L/12
95-0328-00	Tilt/Plum Bob Assembly	10.15	9.25

UNIVERSAL BALL SHOOTER ASSEMBLY

- For all pinball games
- Black bezel and black knob with black tip
- Simply mount to cabinet

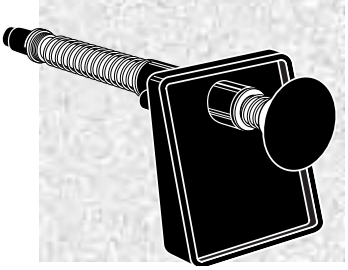

Part Number		Price per ea.	L/12
95-0086-00	Universal Ball Shooter Assembly	16.45	15.65

DROP TARGET

- Durable – made from super tough white nylon
- Fits Data East / Sega pinballs

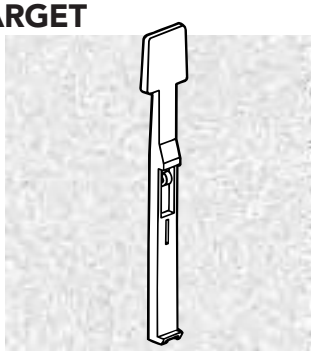

Part Number		Price per ea.	L/25
25-1325-00	Drop Target, Blank, White	1.65	1.30

BALL SHOOTER SPRINGS

- Original equipment
- Plated steel springs

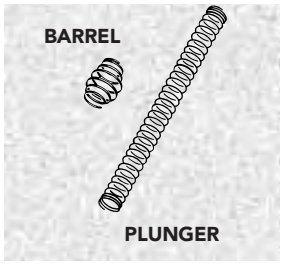

Part Number		Price per ea.	L/25
25-1326-00	Barrel Spring	.53	.48
25-1327-00	Plunger Spring	.73	.73

OLD STYLE FLIPPER REBUILD KIT

- For older Williams pinball machines

  Does not include coils

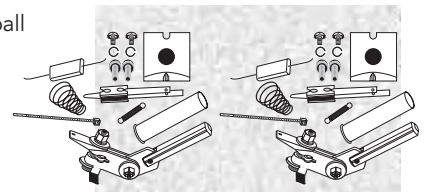

Part Number		Price per ea.
A-13524-1	Old Style Flipper Rebuild Kit	33.75

FLIPTRONIC FLIPPER REBUILD KIT

- For new style Williams pinball machines
- Does not include coils

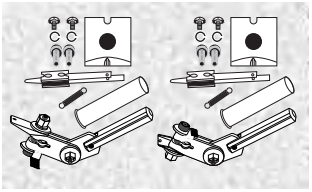

Part Number		Price per ea.
A-13524-8	Fliptronic Flipper Rebuild Kit	33.75

DO YOU WANT TO KNOW EACH TIME YOUR ORDER SHIPS OUT?

e-mail notification and order **tracking information** is now available from Happ Controls! Contact your sales representative or e-mail our customer service department at: **info@happcontrols.com** with your account information.

PINBALL COILS & SLEEVES

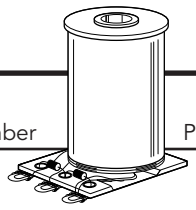

WILLIAMS/BALLY

Part Number	Price per ea.
A-14406	8.15
A-14701	8.15
A-15849-L-2	36.15
A-30-3000	6.15
AE-23-800-02	5.55
AE-23-800-04	5.55
AE-24-900	6.35
AE-25-1000	5.55
AE-28-1500	5.55
AE23800	6.10
AE23800-03	5.55
AE23900	6.05
AE26-1500-02	6.10
AE261200	5.55
AE261500	6.45

Part Number	Price per ea.
AE271200	5.90
AE302000	7.95
AF25-500/28-100	7.95
AQ25-500/34-5050	9.15
AQ26-600/34-4500	7.95
AT-27-1300	5.90
C28-1100	6.45
FL-11722	9.15
FL-11753	9.15
FL-17636	10.15
FL11629	9.15
FL11630-50V	9.15
FL117531	9.70
FL15411	9.15
H-23-870	15.75

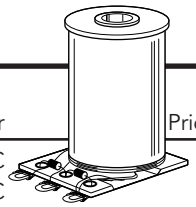

Part Number	Price per ea.
SA-23-750-DC	9.70
SA-23-850-DC	5.55
SA5-24-750-DC	5.55
SFL-19-400/30	8.55
SFL19400/30750	9.15
SFL20-300/30800	9.15
SFL23600/30-2600	9.15
SFL24600/30-2600	9.70
SG-23-850-DC	7.85
SM-26-600-DC	6.75
SM1-26-600	9.15
SM30-1100-DS	9.15
SM31-900	6.15
SMI-35-4000	10.90

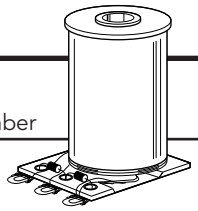

PREMIER/GOTTLIEB

Part Number	Price per ea.
27643	5.10
A-14789	9.35
A-1496-SS	6.10
A-16890	7.25
A-17875	9.50
A-17876	6.30
A-17891	7.95
A-18102	7.95
A-21741	7.25

Part Number	Price per ea.
A-26450	6.10
A-26646	9.65
A-30297	6.05
A-4893	7.25
A-5141	7.30
A-5194	7.25
A20095	7.25
A24161	6.75
A25959	8.50

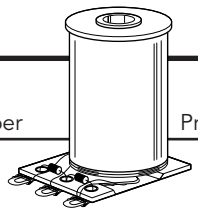

Part Number	Price per ea.
A26451	9.60
A26926	9.60
A27642	9.45
A28740	9.65
A29876	8.55
A31272	7.30
A5195	6.75

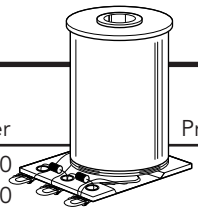

SEGA / DATA EAST / STERN

Part Number	Price per ea.
090-5002-00	6.10
090-5004-00	6.10
090-5005-00	6.10
090-5011-00	8.50
090-5013-00	8.30
090-5020-02	8.50

Part Number	Price per ea.
090-5020-20	11.80
090-5020-30	8.55
090-5023-00	5.45
090-5030-00	8.55
090-5032-00	10.30
090-5034-090	5.45

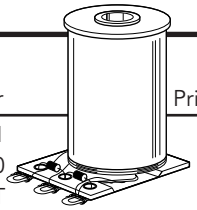

Part Number	Price per ea.
090-5036-01	5.55
090-5041-00	9.10
090-5044-0T	6.45
090-5062-00	14.30
090-5067-00T	13.55

CRANE COILS

Part Number		Price per ea.
CS-834	Gripper coil for Smart & Kramer	13.35
CS-992	Hollywood crane coil	22.25
CS1121	Claw coil for Smart cranes	13.35
CS905	Pop-A-Ball coil	12.05
CS-1230	Coil for Plush Bus	18.35
CS-1148	Crane coil	13.35

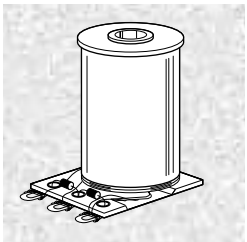

COIL SLEEVES

Part Number		Price per ea.
03-7067	1-7/8" long	.68
037066	1-3/4" long	.53
0370665	2-1/4" long	.41

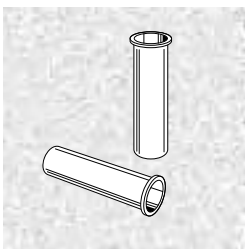

© HAPP CONTROLS

PINBALL SWITCHES

ROLLOVER SWITCH

- CHERRY switch
- Generic rollover wire form
- Replaces most micro-type rollover switches
- Use with switch bracket (below) to replace leaf rollover switches
- 10 million cycle reliability

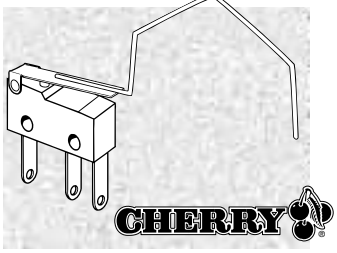

Part Number		Price per ea.	L/100
95-4149-00	Rollover Switch	3.25	2.55

MINIATURE MICRO SWITCHES W/ ACTUATOR

- Flat or wire actuator
- Form to desired shape
- Fit all recent pinballs using subminiature micro switches

CHERRY

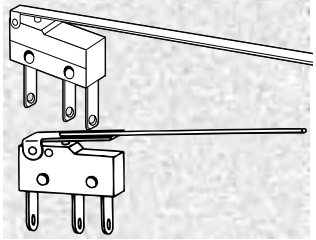

Part Number		Price per ea.	L/100
95-4170-00	Miniature Switch with Wire Actuator	3.25	2.55
95-4183-00	Miniature Switch with Flat Actuator	3.25	2.55

SWITCH BRACKET

- For under-playfield mounting of any of the above switches
- Supplied with push nuts
- Mount switch left or right

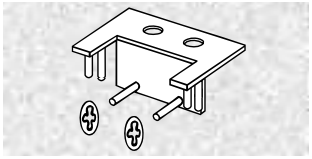

Part Number		Price per ea.	L/100
95-4184-00	Switch Bracket with Push Nuts	.79	.66

ANTI-SLAM SWITCH

- Sensitive – with heavy weight
- With bracket to fit door lock

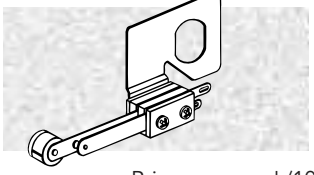

Part Number		Price per ea.	L/100
95-4176-00	Anti-Slam Switch w/Bracket	8.55	7.60

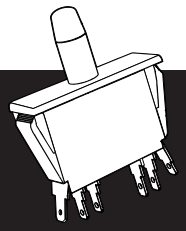

LOOKING FOR INTERLOCK SWITCHES? SEE OUR COMPLETE LINE OF SWITCHES IN THE ELECTRICAL SECTION - STARTING ON PAGE 41

PINBALL TARGET SWITCHES

2 YEAR WARRANTY

- Universal replacement target switch for use on both new and old pinball machines
- No adjustment required throughout the life of the target
- Repetitive operating point
- 50,000,000 cycle typical switch life
- Shock, dust and dirt resistant
- Integrated electrical connector
- Only the target head protrudes above the playing field
- Translucent target heads illuminate brilliantly
- Includes mounting screws, wire harness and installation instructions

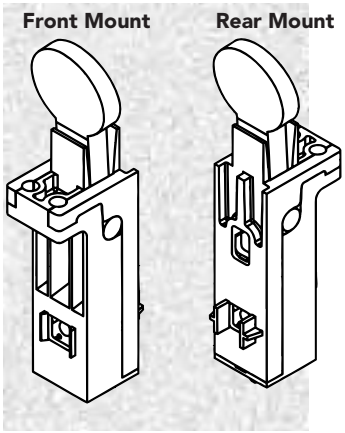

HEAD TYPE:
See Head Type Chart
(1,2,3,4,5)

KIT:
K = With Installation Kit
_ = Without Installation Kit

46-MH10-CK

MOUNTING:
F = Front
R = Rear

COLOR:
10T = Red Translucent
12T = Blue Translucent
13T = Green Translucent
13FT = Green Fluorescent Translucent
14T = Purple Translucent
15T = Yellow Translucent
17T = Amber Translucent
18 = Clear Translucent
19T = Orange Translucent

Head Types Available

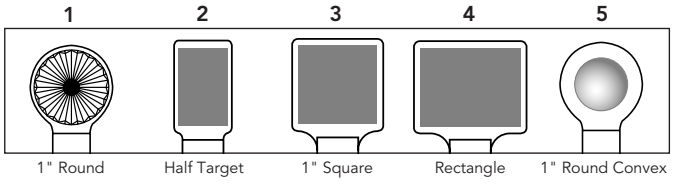

Installation Kit Includes the necessary items needed to replace existing older style pinball targets (2 Mounting Screws, Wire Harness and Instructions)

Part Number		Price per ea.	L/25
46-MH10-CK	Pinball Target Switch w/Installation Kit	6.15	6.00

PINBALL PLAYFIELD SWITCH ASSEMBLIES

- Made with GOLD contact subminiature CHERRY DA-3 switches for long, reliable service
- Sold as complete assemblies, including bracket and diode
- Ready to install on back of playfield
- Use on almost any pinball to replace troublesome leaf switch assemblies
- OEM applications – Custom designed switches also available, please inquire

CHERRY

BALLSHOOTER
50-4007-00

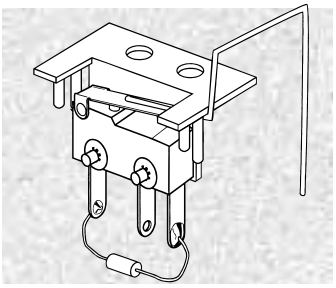

ROLLOVER RIGHT HAND
50-4001-00

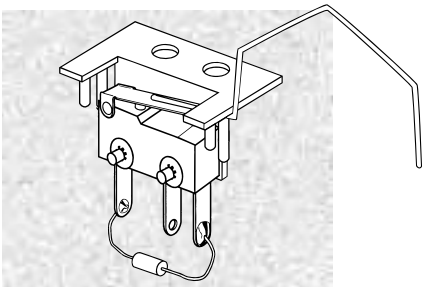

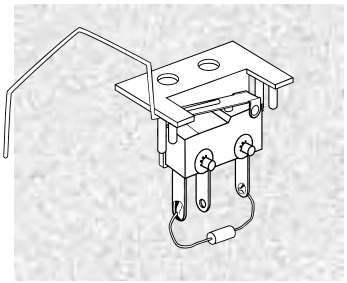

ROLLOVER LEFT HAND
50-4006-00

SPINNER RIGHT HAND
95-4180-00

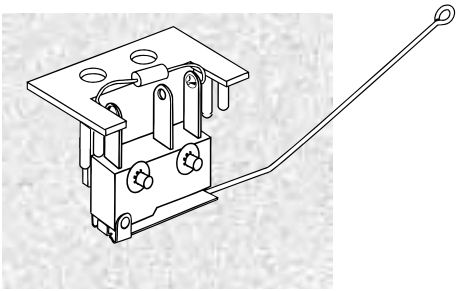

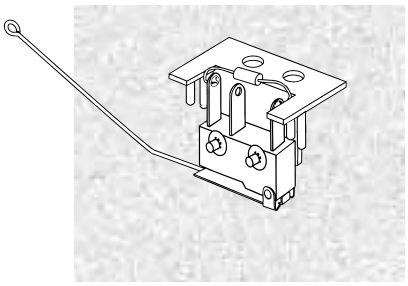

SPINNER LEFT HAND
95-4180-01

Part Number		Price per ea.	L/25
50-4007-00	Ballshooter	4.30	3.80
50-4001-00	Rollover, Right Hand	4.10	3.55
50-4006-00	Rollover, Left Hand	4.10	3.55
95-4180-00	Spinner, Right Hand	4.20	3.70
95-4180-01	Spinner, Left Hand	4.20	3.70

© HAPP CONTROLS

PINBALL SWITCHES WITH ACTUATORS

- Made with GOLD contact CHERRY switches for long reliable service
- Two types available: "Miniature" D4 series "Subminiature" DA3 series
- Fit most applications on recent pinball games
- OEM applications – Custom designed switches also available, please inquire

CHERRY

MINIATURE SWITCHES

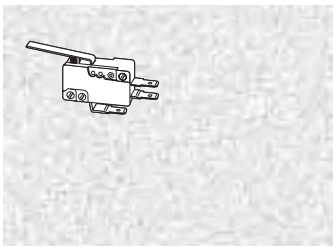

OUTHOLE MEDIUM
95-4177-00
- 1.06" Actuator

KICK SWITCH
95-4155-00
- 1.5" Actuator

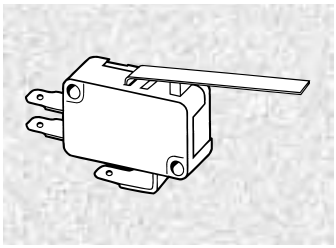

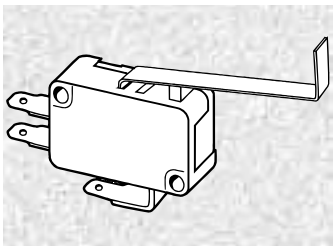

EJECT HOLE
95-4185-00

OUTHOLE LARGE
95-4152-00

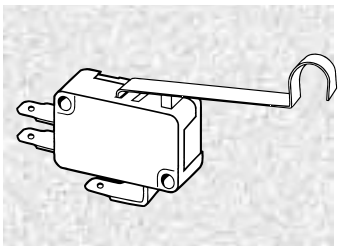

Part Number		Price per ea.	L/25
95-4177-00	Outhole Switch, Medium	3.25	2.95
95-4155-00	Kick Switch	4.35	3.90
95-4185-00	Eject Hole Switch	3.80	3.30
95-4152-00	Outhole Switch, Large	4.00	3.35

SUBMINIATURE SWITCHES

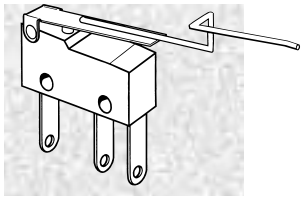

SUPER VERTICAL UPKICK
95-4202-00

VERTICAL UPKICK
95-4203-00

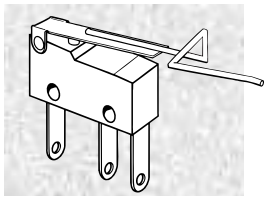

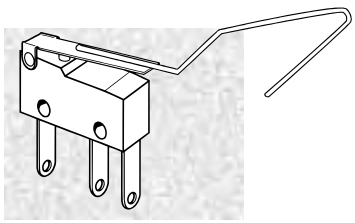

BALL SHOOTBACK
95-4225-00

OUTHOLE SMALL
95-4141-00
- 2.25" Actuator

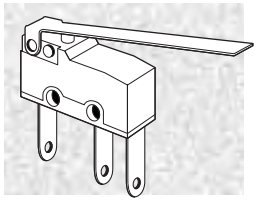

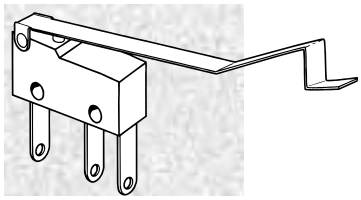

RAMP SWITCH
95-4140-00

LOCKABLE SWITCH
95-4172-00

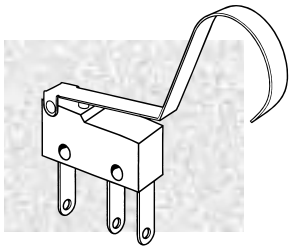

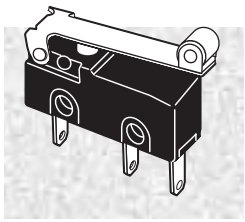

BALL DETECT
95-4142-00

Part Number		Price per ea.	L/25
95-4202-00	Super Vertical Upkick	4.05	3.55
95-4203-00	Vertical Upkick	4.05	3.55
95-4225-00	Ball Shootback	4.30	3.80
95-4141-00	Outhole Switch, Small	3.25	2.95
95-4140-00	Ramp Switch	3.90	3.40
95-4172-00	Lockball Switch	4.00	3.50
95-4142-00	Ball Detect Switch	3.50	3.10

DOT MATRIX DISPLAY

- Complete assembly
- Glass mounted on PCB ready to use

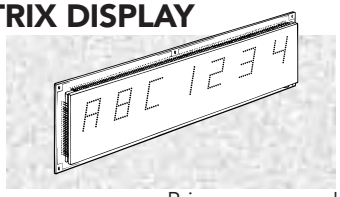

Part Number		Price per ea.	L/5
49-7003-3	Dot Matrix Display 128 x 32	165.25	147.90
49-7011-00	Dot Matrix Display 192 x 64 with 12V DC Input	342.75	342.75
49-7012-00	Dot Matrix Display 128 x 32 with 12V DC Input	279.70	257.90

DISPLAYS

- Glass and Pins only
- Used to replace original OEM equipment
- Various types available

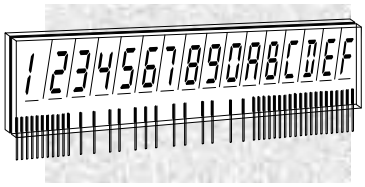

Part Number		Price per ea.	L/5
49-7017-00	4-Digit Numeric Display	34.05	34.05
49-7001-00	6-Digit Numeric Display	39.60	39.60
49-7002-00	7-Digit Numeric Display	41.65	35.40
49-0478-00	7-Digit Alpha Numeric Display	46.85	39.60
49-7000-00	16-Digit Alpha Numeric Display	50.00	49.00

PINBALL LEAF SWITCHES

- Made from best quality materials for long life
- For Williams Games
- Tungsten contacts
- Fit many applications

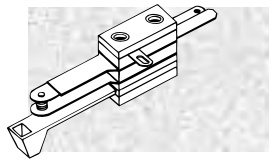

LANE CHANGE SWITCH

95-4329-00

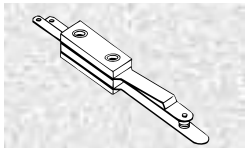

END OF STROKE SWITCH

95-4330-00

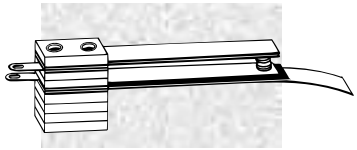

SINGLE CONTACT FLIPPER SWITCH

95-4328-00

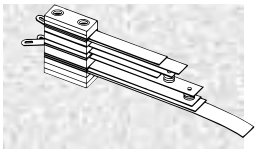

DOUBLE CONTACT FLIPPER SWITCH

95-4327-00

Part Number	Ref. Number		Price per ea.	L/10
95-4329-00	SW1A150	Lane Change Switch	4.25	4.25
95-4330-00	03-7811A	End of Stroke Switch	2.15	2.05
95-4328-00	SW10A48	Single Contact Flipper Switch	4.90	4.30
95-4327-00	SW1010A-13	Double Contact Flipper Switch	9.20	7.80

PINBALL PLAYFIELD GLASS

21"W x 43"L x 3/16" Thick

Tempered glass for safety

Ref. 660-5001-00

Each playfield glass packaged individually in it's own cardboard box, two per carton

Minimum order is one carton of two

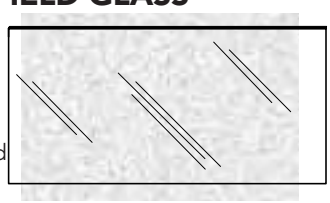

Part Number		Price per ea.
660-5001-00	Pinball Playfield Glass 21"(W) x 43"(L)	55.60

PINBALL PLAYFIELD MINI MARS LIGHT

- Adds attractive light and colors to any pinball or redemption type game
- Williams Ref. 03-8149-XX
- Sega Ref. 550-5031-XX

COLOR CODE

XX = Color	
10T = Red	15T = Yellow
12T = Blue	17T = Amber
13T= Green	18 = Clear
14T= Purple	19T = Orange

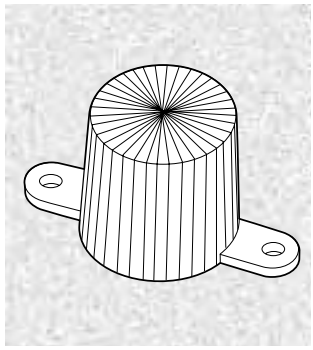

Part Number		Price per ea.	L/25
49-5017-XX	Mini Mars Light Translucent, Specify Color	1.20	1.15

PINBALL PLAYFIELD STARBURST HAT LIGHT

- Adds attractive light and colors to any pinball or redemption type game
- Williams Ref. 03-8662-X
- Sega Ref. 550-5032-XX

COLOR CODE

XX = Color	
10T = Red	15T = Yellow
12T = Blue	17T = Amber
13T= Green	18 = Clear
14T= Purple	19T = Orange

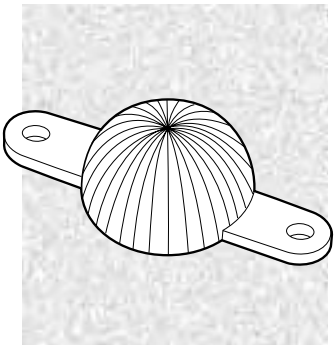

Part Number		Price per ea.	L/25
49-5018-XXX	Starburst Hat Light Translucent, Specify Color	.91	.86

HEAVY-DUTY PINBALL CART

- Lower height design, to fit under all types of Pinball Machines
- Gas filled cylinder, will not leak when lift is placed upon it's side
- Wider pivot point to eliminate "wobble" when moving equipment
- High quality Nylon locking nuts provide ease of maintenance
- Durable MIG welded Canadian 1/8" steel
- 4 Heavy-duty swivel casters, 275 lbs. capacity each, individually replaceable
- Durable Black Powder Coated Surface

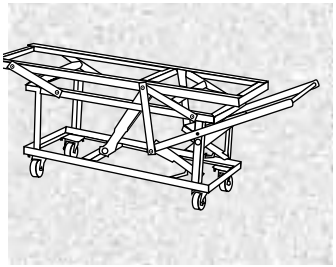

- Lift height: 26"
- Physical Size: 16" Wide x 4' long x 19.5" High
- Load Capacity: 600 lbs.
- Shipping Weight: 75 lbs
- This item has to be shipped by truck to avoid damage

Part Number		Price per ea.
33-1114-00	Heavy-Duty Pinball Cart	475.80
33-1180-00	3" Replacement Caster	12.05
33-1172-00	Replacement Shock Absorber	48.25

© HAPP CONTROLS

PINBALL REPLACEMENT PARTS FOR SEGA / DATA EAST / STERN

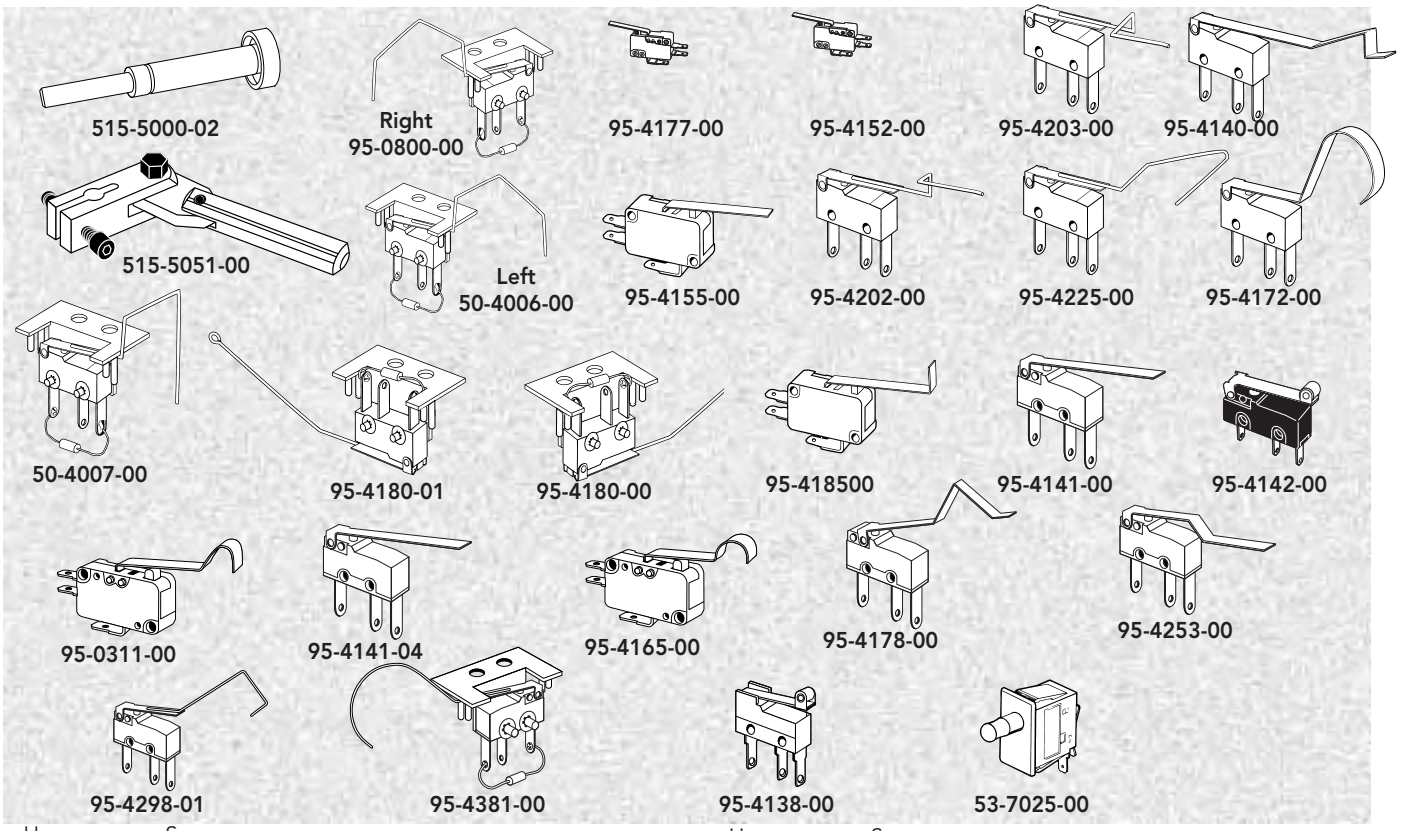

Happ Part No.	Sega Part No.		Price per ea.
53-7025-00	180-5000-00	Interlock P. B., .187 terminal	3.60
95-4140-00	180-5002-01	Ramp switch assembly w/o diode	3.90
95-4177-00	180-5009-00	Outhole medium switch	3.25
95-4141-00	180-5010-00	Outhole Switch Assembly w/o diode	3.25
95-4141-04	180-5010-04	Outhole switch assembly	2.50
95-4152-00	180-5011-00	Outhole switch, large	4.00
95-4185-00	180-5027-00	Eject hole switch	3.80
95-4142-00	180-5028-00	Ball detect switch	3.50
95-4155-00	180-5040-00	Kick switch	4.35
95-4172-00	180-5051-00	Lockable switch	4.00
95-4165-00	180-5052-00	Motor Cam switch assembly	3.30
95-4178-00	180-5057-00	High ramp switch assembly	2.85
95-4202-00	180-5062-00	Super vertical upkick switch	4.05
95-4203-00	180-5063-00	Vertical upkick switch	4.05
95-4225-00	180-5069-00	Ball shootback switch	4.30
95-4253-00	180-5087-00	Wire gate switch assembly, Batman	2.65
95-4298-01	180-5100-01	Switch assembly, Shooter	3.40
95-4101-00	180-5116-00	Switch	3.15
95-4138-00	180-5119-01	Ball Through switch assembly	3.75
95-0311-00	180-5158-00	Switch	3.60
265-5029-02	265-5029-02	Flipper return spring, short	6.50
265-5035-00	265-5035-00	Flipper return spring	1.85
50-4006-00	500-5142-00	Rollover switch, left	4.10
95-4180-00	500-5193-00	Spinner switch, right	4.20
95-4180-01	500-5193-01	Spinner switch, left	4.20
500-5321-08	500-5321-08	White Rectangle Target	10.70
500-5408-02-09	same	Shooter assembly	16.00
500-5477-00	500-5477-00	Ball Launch Assembly	38.60
500-5640-16	500-5640-16	Yellow target with switch	18.15
95-4381-00	500-5706-00	Rollover switch, left	3.70
95-4382-00	500-5707-00	Rollover switch, right	3.70
500-5821-00	500-5821-00	End of stroke switch	11.55

Happ Part No.	Sega Part No.		Price per ea.
500-5944-1	500-5944-1	Flipper assembly, lower right	88.40
500-5944-12	500-5944-12	Flipper assembly, lower left	54.25
50-4007-00	5500-5143-00	Shooter switch assembly w/diode	4.30
95-0800-00	500-6227-02	Rollover Swirch, Right	3.95
500-6306-00		500-6306-00 Right flipper kit	33.75
500-6306-10	500-6306-10	Left flipper kit	33.75
515-5000-02	515-5000-02	Plunger kickback	18.75
515-5051	515-5051	Plunger, link and pawl	16.95
50-4001-00	515-5138-00	Rollover switch, right	4.10
515-5051	515-5051	Plunger link & pawl universal	16.95
515-5077-01	515-5077-01	Flipper base plate right	20.75
515-5077-02		515-5077-02 Flipper base plate left	10.90
515-5133-01		515-5133-01 Flipper & Shaft, White	5.05
515-5339-01		515-5339-01 Slingshot bracket	7.30
515-5369-00	515-5369-00	Coil bracket & plunger	26.55
515-5571	515-5571	Motor 24vac 60 hz 3 watt	90.35
515-5822-00	515-5822-00	Plunger & Link assembly	14.25
515-6213-00	515-6213-00	Kicker arm	53.45
515-6304-01	515-6304-01	Flipper plunger & link	6.90
515-6308-01	515-6308-01	Coil stop sub assembly	6.35
520-5102-00		520-5102-00 Opto transmitter	27.10
520-5103-00		520-5103-00 Opto receiver	31.55
530-5005-0	530-5005-0	Mini post machine thread	.99
530-5332-0	530-5332-0	Hex bumper post	4.45
535-5877-00	535-5877-00	Metal Yoke	6.05
535-6385-00	535-6385-00	Mounting bracket, ball launch	13.35
535-7710-00	535-7710-00	Drop target coil mounting bracket	1.80
545-5151-00	545-5151-00	Rubber Post	1.20
545-5293-00	545-5293-00	Plastic link, blue	.95
565-0029-01	565-0029-01	Plunger cap & spring assy kit	12.05
6663-01	6663-01	Bracket	4.30

PINBALL REPLACEMENT PARTS FOR WILLIAMS GAMES

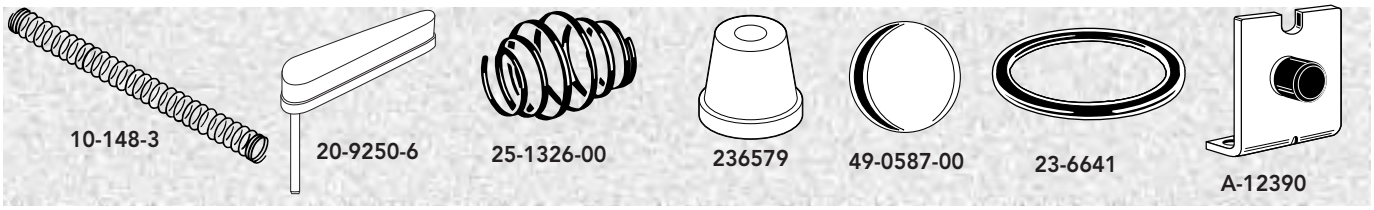

Part Number		Price per ea.
01-1747	Coil retaining bracket	1.10
01-3535	Plate	1.10
01-4251	Link, ball return	1.10
01-5492	Metal armature link	1.25
01-8065	Chrome cover for shuffle alley	30.55
01-9595-2	Mounting Bracket	6.30
01-9794	Mounting bracket	2.10
02-4426-01	Post	.48
02-4436	Spacer 1-1/4"	1.65
02-4436-2	F. F. Spacer	5.85
02-4676	Metal link spacer bushing	1.70
02-4831	Shaft diverter	3.75
02-5173-1	Metal post	4.10
03-6035-4	Wafer jet bumper	1.05
03-7066-4	Coil sleeve	1.30
03-7067	Coil sleeve with flange 1-7/8"	.68
03-7067-5	Coil Sleeve	.91
03-7135-1	Slide Molding 52-5/16"	4.10
03-7811	End of stroke switch	4.30
03-8050-01	Flipper link, gray	.79
03-8470	Sector for Fun House	4.45
03-8502	Trap door floor	15.30
03-8561	Ball pop cup	1.40
03-8750	Target, Millionaire	4.20
03-8753	Flipper link, old style	.50
03-9001	Flipper opto interuptor	2.60
0370665	Flipper coil sleeve	.41
037568	Flipper bushing	.61
04-10020-1	Flap assembly	15.25
04-10094-2	Reflector and socket assembly	4.10
10-148-3	Blue shooter spring	1.25
10-304	Spring Friction	.70
10-376	Flipper spring	.70
10A-149	Barrell spring	.53
11-6889	Outhole kicker lever	4.00
11-7067-6	Coil sleeve with flange 2-5/8"	.50
11-7357	Nylon shooter sleeve	.69
11-7601-4	Test button, red	.70
11-7695	Solenoid bracket	1.65
11304	Lift mech	37.70
12-6801	Clip coin mechanism retainer for	.44
5881-09021-00	Battery holder	8.35
16103-L	Flipper mounting bracket, left	8.50
178400-001	Ball for Hoop It Up - Orange	1.80
20-6520	Steel pinball 3/4"	1.80
20-8716-20	Roll pin 1/8" x 3/8"	.51
20-8716-5	Roll pin	.31
20-8718-1	E-Ring for shooter rod	.26
20-9247-1	Magnet coil for Twilight Zone	27.75
20-9250-6	Flipper and shaft assembly, yellow	3.70
20-9253-7	Ball shooter rod with black knob	6.60
23-6313	Grommet 5/8" width	.50
23-6534-10	Front Edge Rubber 22-1/8"	1.69
236579	3/4" Yellow Tapered Rubber Bumper	1.55
23-6641	Black rubber bumper	.89

Part Number		Price per ea.
248767	Lamp displacement socket #555	.94
25-1018-01	White rubber ring 7/32"	.39
25-1326-00	Barrel Spring	.53
27-1037	Coin eject button	1.60
3-B-7178	Pin Strike Zone (new #31-1445.1)	3.75
31-1445.1	Bowling pin for shuffle alley	5.10
4006-01005-06	Screw 6-32 x 3/8"	.25
4008-01079-05	Screw	.25
4010-01006-08	Screw for rod	.25
4010-01086-14	Screw cap	.25
4322-01125-40	Bolts Leg	.55
49-0587-00	1-1/16" Pinball	1.80
50-0071-00	Bottom seat plate for seat slide	42.20
50-2033-05	Yellow rubber bumper 1/2" O.D. .260 I.D.	.52
5040-12729	Radial capacitor 001438	5.10
5162-12422-00	IC	3.70
5371-13299-00	IC AD-12851 16 bit mono	11.30
5400-10320-00	IC MPU 68 B09E	5.59
5400-13298-00	IC MPU 2105KP-40 ADSP	26.65
5400-14129-00	IC DSP 320C31 50 MHZ	177.00
5490-13341-00	Opto	5.15
5490-14575	Opto sensor	2.60
5610-14927-00	Transformer for Cruis'n World	167.75
5647-12693-58	Switch	8.15
5671-12403-00	LED, red	.60
5733-12060-01	Fuse holder for Fliptronic assembly	.70
5795-12653-03	3" cable ribbon	6.30
5795-12838-30	30" cable ribbon	5.15
5795-13018-00	22" cable ribbon	13.10
5795-14665-85	Ribbon cable 2MM x 2-1/8"	15.60
5881-09021-00	Battery holder for MPU (3 "AAA" batteries)	8.35
95-4327-00	Flipper switch double contact (replaces SW1010A-13)	9.20
95-0944-00	Switch 5647-12693-19	3.40
95-0949-00	Switch 5647-12693-11	3.40
95-1589-00	Switch 5647-12693-01	4.35
95-0693-00	Switch 5647-12693-31	4.45
95-0984-00	Kicker Assy. w/coil & bracket A-15708	43.40
A-11199-P	Socket and bulb	4.65
A-11388	Reset plate	4.10
A-11397	Stop bracket	3.70
A-11658	Switch and diode	5.20
A-12390	Coil stop	1.65
A-13453	Reset assembly	7.45
A-14690-4-P	Target circle red	7.20
A-14691-1-P	Blue target	9.45
A-14701	Coil	8.15
A-15211	Drop target PCB for Fishtales	65.85
A-15605	Target stop bracket	2.30
A-16886	Flipper stop bracket	3.40
A-16908	Opto LED assembly	7.65
A-16909	Opto LED assembly	7.65
A-17982	7 LED trough PCB	47.80
A-18146	Mounting bracket	6.00
A-18240	Front molding assembly, narrow	39.65

© HAPP CONTROLS

PINBALL REPLACEMENT PARTS FOR WILLIAMS GAMES

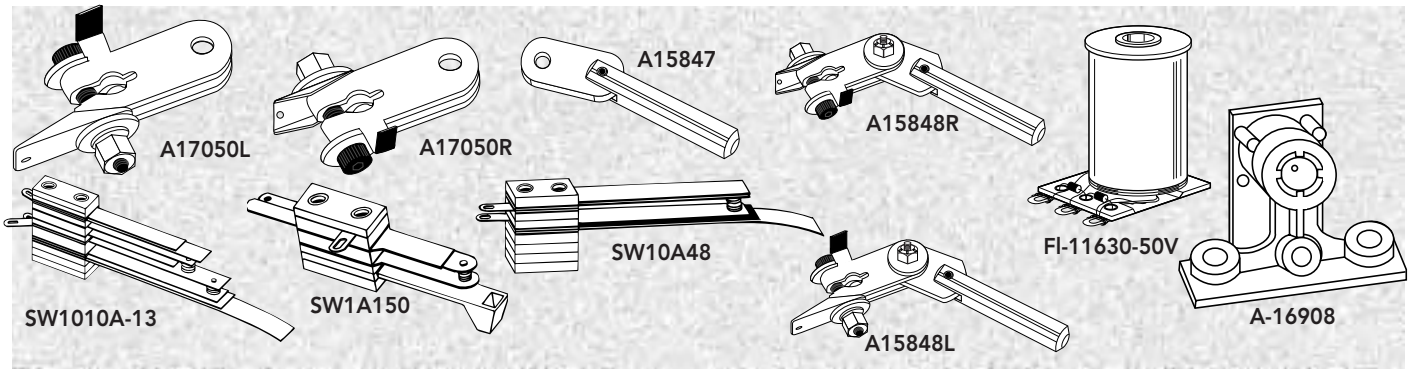

Part Number		Price per ea.
A-18617-1	Trough IR LED PCB	27.90
A-18618-1	Trough Trans PCB	31.60
A-19514	Leg, Chrome	20.45
A-19668	PLD assembly Cruis'n CPU U52	20.80
A-19669	PLD assembly Cruis'n CPU	30.60
A-19670	PLD assembly Cruis'n CPU U43	13.60
A-19671	PLD assembly Cruis'n	11.60
A-19672	PLD assembly Cruis'n CPU	20.00
A-19673	PLD assembly	9.45
A-20258	IC for Williams Hangtime	34.85
A-4754	Rod and ring for thumper bumper	5.20
A-6587	Mounting Bracket	2.10
A15847	Plunger and link	2.50
A15848L	Plunger, link and pawl assembly, left	8.45
A15848R	Plunger, link and pawl assembly, right	8.45
A17050L	Flipper crank assembly, left	7.95
A17050R	Flipper crank assembly for World Cup Soccer	7.95
A17620	Chute 2 ball popper for Demolition Man	180.25
A17768	Arm and extension assembly	8.75
A-17799-15-P	Target, orange	4.70
AE23800	Coil	6.10
AE-23-800-04	Coil	5.55
AE-24-900	Coil	6.35

Part Number		Price per ea.
AE-25-1000	Coil Assembly	5.55
AE-28-1500	Coil	5.55
AE26-1500-02	Coil	6.10
AF25-500/28-100	Bally coil	7.95
AL-23-800	Coil	6.15
AQ25-500/34-5050	Bally flipper coil	9.15
B-12445-7	Ball Shooter	20.40
B-13267-P	Target switch	5.10
B-9951-1	Switch	2.75
B125831	Stand up target for Adams Family	12.95
FL11629	Coil	9.15
FL11630-50V	Coil	9.15
FL-11722	Flipper coil	9.15
FL-11753	Flipper coil	9.15
MSS1200G	Switch slide Alco	6.85
SA-23-750-DC	Coil	9.70
SA-23-850-DC	Coil	5.55
SA5-24-750-DC	Coil	5.55
SFL19400/30750	Flipper coil	9.15
SM31-900	Coil	6.15
SMI-35-4000	Coil	10.90
SW1A194	End of stroke switch	3.50

HAPP CONTROLS LOCK DEPARTMENT

Happ Controls now has it's own lock assembly department. We offer fast turn around on 7-pin tumbler locks. Most custom lock orders can be shipped within 48 hours. Happ locks can be keyed to your existing 7-pin tumbler key, if we receive a sample key with your order. Our 7-pin tumbler locks offer high security at a reasonable price. For your added protection, any code issued by Happ Controls can be restricted in our computer system exclusively to your company.

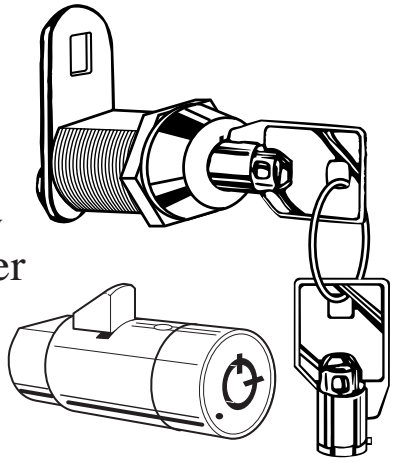

REPLACEMENT WILLIAMS PINBALL SWITCHES

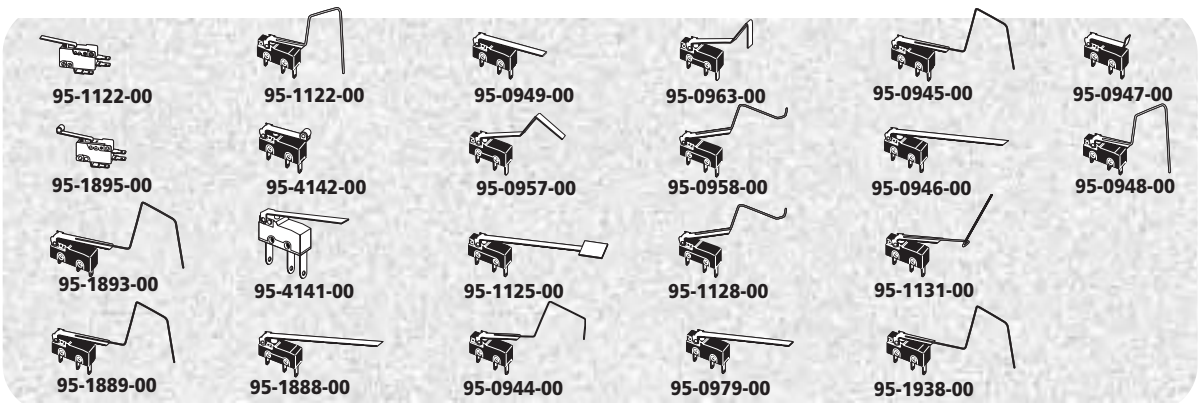

Part Number	Williams P/N	Description	Price per ea.
95-4177-00	5647-09957-00	SWITCH, OUTHOLE, MEDIUM	3.25
95-1895-00	5647-10915-00	SWITCH ASSY WMS DA3 TYPE	4.60
95-1893-00	5647-12073-37	SWITCH ASSY WMS DA3 TYPE	5.55
95-1889-00	5647-12693-01	SWITCH ASSY WMS DA3 TYPE	3.15
95-1122-00	5647-12693-04	SWITCH ASSY WMS DA3 TYPE	5.55
95-4142-00	5647-12693-06	SWITCH ASSY BALL DETECT	3.50
95-4141-00	5647-12693-07	SWITCH ASSY OUTHOLE W/O DIODE	3.25
95-1888-00	5647-12693-08	SWITCH ASSY WMS DA3 TYPE	2.50
95-0949-00	5647-12693-11	SWITCH ASSY WMS DA3 TYPE	3.40
95-0957-00	5647-12693-13	SWITCH ASSY WMS DA3 TYPE	3.40
95-1125-00	5647-12693-14	SWITCH ASSY WMS DA3 TYPE	6.15
95-0944-00	5647-12693-19	SWITCH ASSY WMS DA3 TYPE	3.40
95-0963-00	5647-12693-21	SWITCH ASSY WMS DA3 TYPE	4.85
95-0958-00	5647-12693-24	SWITCH ASSY WMS DA3 TYPE	3.40
95-1128-00	5647-12693-25	SWITCH ASSY WMS DA3 TYPE	5.55
95-0979-00	5647-12693-31	SWITCH ASSY WMS DA3 TYPE	3.90
95-0945-00	5647-12693-32	SWITCH ASSY WMS DA3 TYPE	3.40
95-0946-00	5647-12693-36	SWITCH ASSY WMS DA3 TYPE	3.40
95-1131-00	5647-12693-55	SWITCH ASSY WMS DA3 TYPE	6.15
95-1938-00	5647-12693-62	SWITCH ASSY WMS	5.80
95-0947-00	5647-12693-66	SWITCH ASSY WMS DA3 TYPE	3.40
95-0948-00	5647-12693-69	SWITCH ASSY WMS DA3 TYPE	4.05

DO YOU WANT TO KNOW EACH TIME YOUR ORDER SHIPS OUT?

e-mail notification and order **tracking information** is now available from Happ Controls! Contact your sales representative or e-mail our customer service department at: **info@happcontrols.com** with your account information.

© HAPP CONTROLS

MR. PINBALL - PINBALL MACHINE LIST

NEW

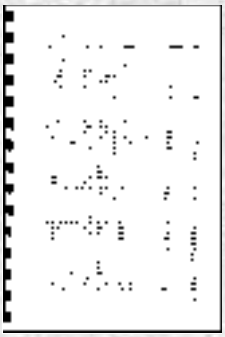

- This publication contains important information about all pinball machines made since the flipper was invented in 1947. This is the most popular list among serious pinball machine collectors.
- Updated pricing / value information
- Contains four sections:

Flipper pinball machines sorted alphabetically by machine name

Flipper pinball machines sorted chronologically by manufacturer

Baseball pinball machines sorted alphabetically by name

Bingo pinball machines sorted alphabetically by name

- All sections provide information about each type of machine, usually including name, manufacturer, date released, number of players, distinguishing features, production numbers, and value.
- This is the most comprehensive and accurate list available.
- Wire bound, 8.5"x5.5", 108 pages perfect for carrying with you everywhere
- Editions are updated yearly, so be sure to get the latest edition

Part Number		Price per ea.
27-1308-00	Mr. Pinball Machine List	17.40

PINBALL MACHINE CARE AND MAINTENANCE

NEW

- This useful pinball guide book by Bernard Kamoroff covers a large range of topics from the history of pinball to buying a pinball machine
- Over 100 pages
- A must have for every pinball collector or enthusiast
- A wealth of valuable information and step-by-step help
- Packed with tips and clear instructions
- Covers electro-mechanical & solid state machines
- Novice or a Professionals will want this book in their library
- Makes a perfect gift for the pinball enthusiast

Part Number		Price per ea.
27-0099-00	Pinball Machine Care and Maintenance	25.45

PLAYFIELD CLEANERS & POLISHES

Novus Cleaner & Polish

- Cleans and protects playfield surface for long life
- Special formula removes light to heavy scratches in playfields and plexiglass
- Recommended by major pinball manufacturers

Mills Pinball Playfield Wax & Cleaner

- Excellent one step non-abrasive playfield wax and cleaner
- Great cleaner for rubber rings
- 16 oz. squeeze btl.,12 per case

Wildcat KC-22 Krystal Clear Mylar Cleaner

- Non-petroleum based cleaner designed to be specifically used on mylar and other surfaces to achieve a clean, durable protective shine
- Will extend life of mylar playfields
- New style bottle prevents evaporation
- 16 oz. spray mist bottle
- 12 per case

Wildcat #125 Playfield Cleaner & Polish

- Excellent in cleaning pinball playfields
- Excellent for removing and cleaning up wax buildup in vending machines "price tab holders"
- New style bottle prevents evaporation
- 12 per case

Gemini CP-100 playfield Cleaner & Polish

- Excellent for playfields, pool balls, rubber rings, etc.

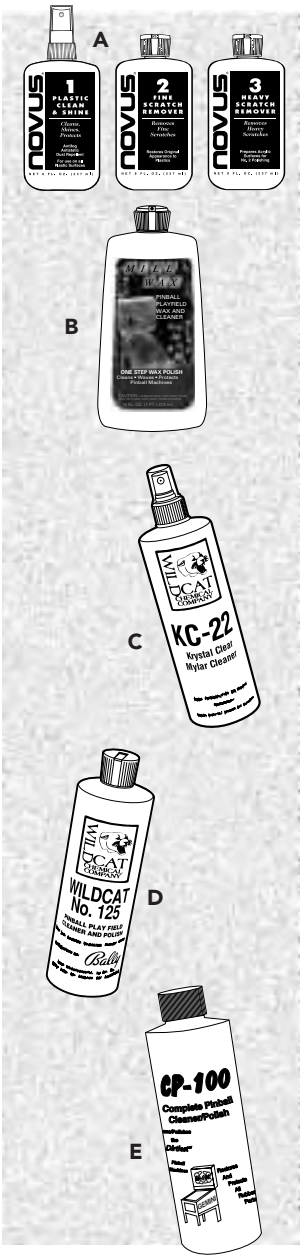

NOVUS CLEANER & POLISH		Price per ea.	Price per case
25-1328-00	Novus #1, 8 oz. bottle, 24 per case	4.05	3.85
25-1329-00	Novus #2, 8 oz. bottle, 24 per case	5.20	5.00
25-1334-00	Novus #3, 8 oz. bottle, 24 per case	7.25	6.45
25-1330-00	Novus #1, 64 oz. bottle, 12 per case	15.75	14.55
25-1331-00	Novus #2, 64 oz. bottle, 12 per case	26.65	25.35

MILLS PINBALL PLAYFIELD WAX & CLEANER		Price per ea.	L/12
29-1040-00	Mills Pinball Playfield Wax & Cleaner	8.45	7.80

WILDCAT KC-22 KRYSTAL CLEAR CLEANER		Price per ea.	L/12
29-1052-00	Wildcat KC-22 Krystal Clear Mylar Cleaner	10.85	10.20

WILDCAT #125 PLAYFIELD CLEANER & POLISH		Price per ea.	L/12
25-1332-00	Cleaner & Polish (Quart Size)	16.95	16.40
25-1333-00	Cleaner & Polish (Pint Size)	10.90	9.75

GEMINI CP-100 PLAYFIELD CLEANER & POLISH		Price per ea.	Price Full case
29-1095-00	Cleaner & Polish (16 oz.), case/12	9.65	9.10
29-1051-00	Cleaner & Polish (8 oz.), case/24	4.30	4.05

PRO CHALLENGER II™ ELECTRONIC DART BOARD

Pro Challenger II™ is the "Player's Choice". With the expandable game cartridge port, this dart game never becomes obsolete. No other electronic dart board offers more entertainment or greater challenge.

- The only expandable game
- Expandable game cartridge port allows you to change games with optional game cartridges
- Commercial quality
- Professional size target (15-1/2" diameter)
- 1 to 3 players can try their skill against Sal Solitaire (the Computer) at three different skill levels
- 18 games included with 460 game variations
- Full 4-player LED readout
- Double or single bullseye
- Sound effects & volume control
- Patented aesthetic design & durable structure
- AC adapter included
- Two year limited warranty
- Made in the USA

Games Included:

Cricket, Cut-Throat Cricket, No-Score Cricket, 301,501, 701 & 1001 Games, Around the Clock Games (Single, Double & Triple), Hi-Score, Killer, Unders, Overs, Shanghai 1, Shanghai 2, Halve It & Big 6

Accessories Included:

6 Pro darts, Tips, Power pack, mounting hardware, instruction manual

Part Number		Price per ea.
26-1738-00	Pro Challenger II™ Electronic Dart Board	279.99

PRO CHALLENGER I™ ELECTRONIC DART BOARD

The Ultimate Home Electronic Dart Board

- 21 Different Games with options
- Expandable game cartridge port allows you to change games with optional game cartridges
- Test your skill against Sal Solitaire (the Computer) at three different skill levels
- Built to last, commercial quality
- Professional size target (15-1/2" diameter)
- Cricket – three LED display
- Heavy-duty textured cabinet designed to hide fingerprints
- Detachable power pack can be removed and cord hidden when not in use
- Two year limited warranty
- Made in USA

Games Included:

- 301, 501, 701, 1001, Hi-Score
- Cricket Games: Cricket, Cut Throat Cricket, No-Score Cricket

Accessories Include:

- 6 Pro darts, tips, power pack, mounting hardware, instruction manual

Part Number		Price per ea.
26-1760-00	Pro Challenger I™ Electronic Dart Board	305.00

© HAPP CONTROLS

PLASTIC DART FLIGHTS

- Durable One-Piece Molded Plastic Design
- High Quality

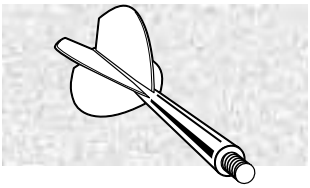

Part Number		Price per ea.	L/10
26-1074-100	House Dart Flight, Red	.18	.17
26-1074-120	House Dart Flight, Blue	.18	.17
26-1074-150	House Dart Flight, Yellow	.18	.17
26-1074-160	House Dart Flight, Black	.18	.17

DART COLLARS

- Durable Knurled Design
- High Quality

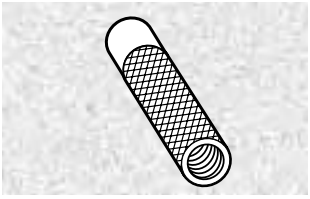

Part Number		Price per ea.	L/50
26-1074-180	Brass Knurled Collar for 1/4" Tip	.62	.51
26-1409-00	Aluminum Knurled Collar for 1/4" Tip	.51	.40

ULTRAFLEX PLASTIC DART TIPS

- The ultimate in plastic dart tips
- The only dart tip designed for many different dart heads
- Extremely durable, yet flexible
- Self-lubricating tip
- Hole in the base of tip allows you to tighten the tip easily with another tip
- Manufactured with state-of-the-art materials
- Available in 1/4"(bag of 500) and 2BA (bag of 1000)
- Made in the USA

Part Number		Price per bag	L/10
26-1066-500	1/4" Black Dart Tip (Bag of 500)	10.95	9.85
26-1099-00	3/16" (2BA) Black Dart Tip (Bag of 1,000)	21.75	19.55

DART TIP EXTRACTOR

- Easily removes broken tips from dartboard
- Black handle

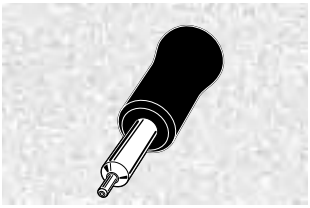

Part Number		Price per ea.	L/6
26-1067-00	Dart Tip Extractor Tool	10.20	9.20

FLIP-OVER ASHTRAY

- Easily mounts to any coin-op game
- Empty ashtray by just flipping it over
- Sturdy metal construction

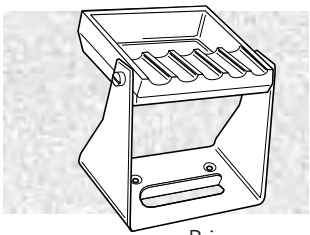

Part Number		Price per ea.
51-0302-00	Flip-Over Ashtray	6.10

BRASS HOUSE DARTS ASSORTMENT PACK

- A Happ Controls exclusive
- Original Arachnid darts
- Contains the following:
  - 25 Red House Darts, Brass, 1/4" Tip
  - 25 Blue House Darts, Brass, 1/4" Tip
  - 25 Yellow House Darts, Brass, 1/4" Tip
  - 25 Black House Darts, Brass, 1/4" Tip

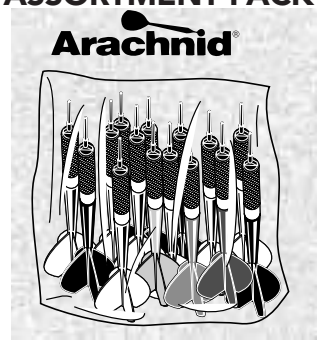

Part Number		Price per pack	L/5
26-1074-00	House Dart Assortment Pack, Brass, 1/4" Tip (100 Darts)	68.80	59.20

BRASS HOUSE DARTS

- Original Arachnid darts
- Plastic Flight & Tip
- High Quality
- Brass Collar with 1/4" Black Tip

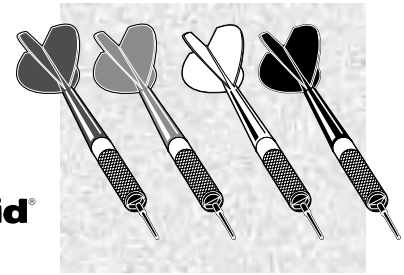

Part Number		Price per ea.	L/10
26-1074-10	House Dart Red, Brass with 1/4" Tip	.99	.74
26-1074-12	House Dart Blue, Brass with 1/4" Tip	.99	.74
26-1074-15	House Dart Yellow, Brass with 1/4" Tip	.99	.74
26-1074-16	House Dart Black, Brass with 1/4" Tip	.99	.74

ALUMINUM HOUSE DARTS

- Original Arachnid Darts
- Plastic Flight & Tip
- High Quality
- Aluminium Collar with 1/4" Black Tip

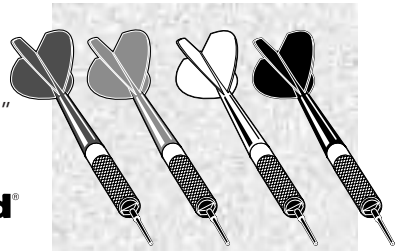

Part Number		Price per ea.	L/100
26-1420-10	House Dart Red, Aluminum with1/4" Tip	.82	.65
26-1420-12	House Dart Blue, Aluminum with 1/4" Tip	.82	.65
26-1420-15	House Dart Yellow, Aluminum with 1/4" Tip	.82	.65
26-1420-16	House Dart Black, Aluminum with 1/4" Tip	.82	.65

MULTI-SIZE CUP & CAN HOLDER

NEW

- Made in USA
- Durable high impact polystyrene
- The only cup holder that can handle multiple beverage sizes from cans to "jumbo" cup sizes
- Convenient "mug handle" groove accepts beer mugs
- 3 pre-drilled mounting holes
- Drain hole stops excess liquid from collecting in the bottom
- Color: Black

Part Number		Price per ea.
27-1422-00	Multi-Size Cup & Can Holder	6.30

9" AMBER MONITOR FOR ARACHNID DART MACHINES

- The exact monitor used by Arachnid in all their dart games
- Open frame
- 12V D.C.
- Call for mounting dimensions and schematics

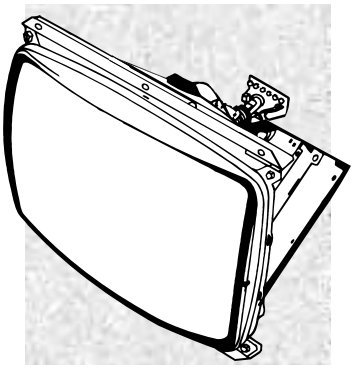

Part Number		Price per ea.
49-0226-00	9" Amber Monitor	412.00

SPECIALTY LAMP

- For Arachnid electronic dart games
- Top illumination lamp

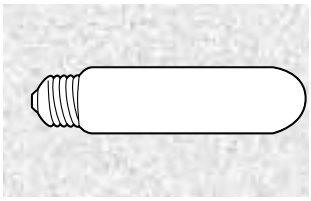

Part Number		Price per ea.	L/10
91-2510-00	25T10 Lamp	1.90	1.65
91-4010-00	40T10 Lamp	2.00	1.80

QUARTER COIN HOLDER

- Holds 8 Quarters or Tokens
- Works great for Pool Tables, Pinball Machines, Foosball and Video Games
- Furnished with Double Sided tape for easy mounting
- 11-5/8" Length

Part Number		Price per ea.	L/25
26-1065-00	Quarter Coin Holder	4.20	3.70

THROW LINE MARKERS

- Solves arguments over location of throw line
- Pressure Sensitive Decal
- Simply peel backing and adhere to floor

Part Number		Price per ea.
26-1070-00	Bull Starts Here, Throw Line Marker	4.60
26-1091-00	Bullshooter, Throw Line Marker	3.70

SPIDER SEGMENTS FOR ARACHNID DART GAMES

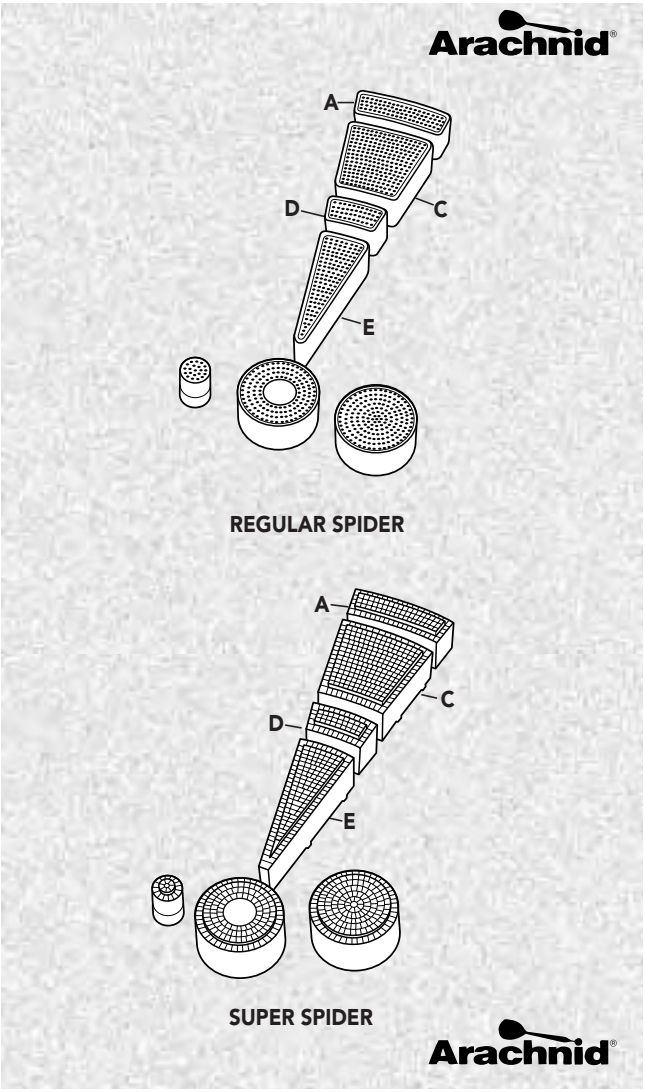

Part Number	Arachnid Part No.	Description	Price per ea.
REGULAR SPIDER SEGMENTS for Arachnid Dart Games			
11577	11577	"A" Black Double Segment Regular Spider	1.50
12687	12687	"C "Black Single Segment Regular Spider	2.10
13797	13979	"D" Black Triple Segment Regular Spider	1.60
16025	16025	Black Inner Bull Regular Spider	4.65
19255	19255	Red Outer Bull Regular Spider	3.15
29244	29244	"A" Red Double Segment Regular Spider	1.50
30465	30465	Standard Bull Regular Spider	2.55
32685	32685	"C" Red Single Segment Regular Spider	2.10
33795	33795	"D" Red Triple Segment Regular Spider	1.40
37154	37154	"E" Black Single Pie Segment Regular Spider	1.65
37155	37155	"E" Red Single Pie Segment Regular Spider	1.65
SUPER SPIDER SEGMENTS for Arachnid Dart Games			
18069	18069	"A" Red Double Segment Super Spider	1.65
19079	19079	"A" Black Double Segment Super Spider	1.65
21408	21408	"C" Red Single Segment Super Spider	2.50
22518	22518	"C" Black Single Segment Super Spider	2.50
23628	23628	"D" Red Triple Segment Super Spider	1.90
24738	24738	"D" Black Triple Segment Super Spider	1.90
25848	25848	"E" Red Single Pie Segment Super Spider	1.65
26958	26958	"E" Black Single Pie Segment Super Spider	1.65
28068	28068	Standard Bull Red Super Spider	2.50
36971	36971	Double Bull Assembly Super Spider	5.75

© HAPP CONTROLS

REPLACEMENT PARTS FOR ARACHNID DART GAMES

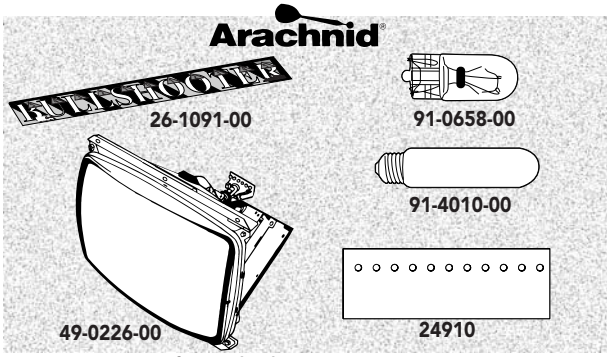

REPLACEMENT PARTS for Arachnid Dart Games

Part Number	Arachnid Part No.	Description	Price per ea.
DS-12444Y-120	DS-12444Y-120	Dallas Chip	83.45
11413	11413	PCB assy Galaxy w/ eprom	551.15
12397	12397	Web assembly	53.60
95-0654-00	12571	Matrix Switch, 10" Leads (old style)	96.30
14617	14617	Super Spider & Segment kit for Galaxy w/o Matrix	126.20
16023	16023	Plexi cover for 9" Monitor	5.55
91-0085-00	18141	Bulb	1.40
54-0000-20	19131	Red Illuminated Push Button w/o La	5.70
22474	22474	Mail Slot	15.70
22718	22718	Plastic Cashbox	5.20
24614	24614	Modem Kit internal for Galaxy	301.78
24798	24798	Smart Target interface for Galaxy	85.40
24910	24910	Lamp Deflector diffuser 11-3/4" long 6300	5.60
26-1154-00	26834	Super Spider Dart Head	449.65
27030	27030	Bulb w/ Socket 14v for Main P.C. Board	2.35
29268	29268	Super Spider thin Web	13.20
49-0226-00	31481	9" Monitor amber 12V	412.00
32579	32579	Target Interface PCB	160.45
91-0660-00	32739	Florescent Ballast, 15V	20.00
26-1091-00	32605	Bullshooter Throw Line Marker	3.70
91-0658-00	34811	Mini Lamp 14v 658 Wedge Base	.79
36994	36994	Board for Power Supply Galaxy	60.30
37165	37165	Missed Dart Detector Board	73.60
91-4010-00	37024	Lamp 40T10F 40 watt Frosted Medium Base	2.00
38603	38603	Power Supply Switching w/ Dimmer for Galaxy	346.95
39168	39168	Missed Dart detector for Galaxy	76.45
40757	40757	Web for Back Widow	55.45
49-4040-00	41341	12" Black Monitor	500.15
49-4040-10	41752	12" Goldstar Monitor	490.30
95-0654-00	12571	Switch Matrix for 5000 Series	96.30
12575	12575	Super Spider Matrix- Thin Line for Galaxy- Double Bull	99.50
39802	39802	Bulb Reflector- Left	7.10
39803	39803	Bulb Reflector- Right	7.10

REPLACEMENT PARTS FOR VALLEY DART GAMES

REPLACEMENT PARTS for Valley Dart Games

Part Number	Valley Part No.	Description	Price per ea.
91-0658-00	223-1006	Miniature Wedge Lamp (GE658)	.79
205-0340	205-0340	Outer Bullseye Blue	1.85
205-0242-00	205-1022-6	Dart Catch Ring (4 pc completes ring)	3.75
205-1221-7	205-1221-7	Inner Bullseye Red	2.60
205-1222-5	205-1222-5	Thin Line White Spider	21.85
207-0048	207-0048	Rubber Sheet American Size	21.85
223-0002	223-0002	Lamp, Push-n-Twist	3.30
91-1891-10	223-0003	Lamp, Mini Bayonet (1891)	.43
223-0006	223-0006	Lamp, Bi-Pin (7832)	.84
91-0030-00	223-0014	Lamp, Mini Wedge Base (158)	.48
N25-0-00-00	N25-0-00-00	Spider Assy w/ Segments (Red/Blue)	120.25
N65-0	N65-0	Matrix Switch Assy (SM/HB/C8)	235.95
Q17-2-00-00	Q17-2-00-00	82 pc Segment Set (Red/ Blue)	85.60
Q28-2-00-00	Q28-2-00-00	4 pc Segment Set Red	6.60
Q29-3-00-00	Q29-3-00-00	4 pc Segment Set Blue	6.35

DO YOU WANT TO KNOW EACH TIME YOUR ORDER SHIPS OUT?

e-mail notification and order **tracking information** is now available from Happ Controls!
Contact your sales representative or e-mail our
customer service department at: **info@happcontrols.com**
with your account information.

FOOSBALLS

- Largest selection of foosballs anywhere!
- From original O.E.M. soccer balls to a realistic looking soccer ball, we have them all

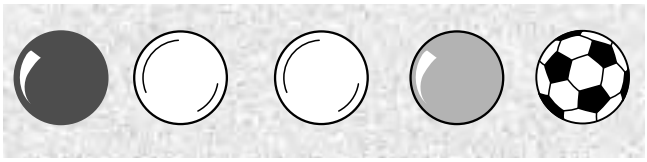

Part Number		Price per ea.
205-1517-0	Red Ball for Tornado Soccer	3.90
49-0550-11C	Foosball, White Composition Surface, Made in the U.S.A.	.91
49-0550-11S	Foosball, White Smooth Surface, Molded	.43
49-0550-15C	Foosball, Yellow Composition Surface, Made in the U.S.A.	.95
49-0550-16BWC	Foosball, Black & White Checkered Surface	.71
49-0550-99	Foosball, Cork (Not Pictured)	2.00

REPLACEMENT PARTS FOR DYNAMO FOOSBALL

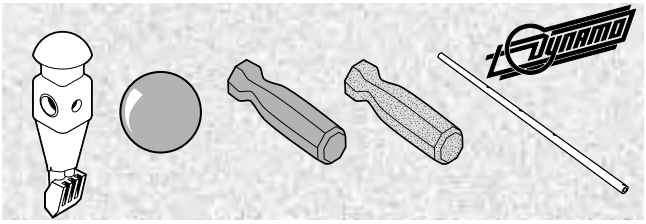

- In stock and ready to ship

Part Number	Dynamo Ref. No.	Description	Price per ea.
030400500	030400500	Magnetic Switch Kit	57.40
26-1751-00	20606831	Goalie Rod	45.85
26-1160-00	710100401	Scoring Kit	20.95
720100800	720100800	Goalie Stop	6.10
26-1255-00	800102501	2 Hole Rod	36.25
26-1256-00	800127201	3 Hole Rod	36.25
26-1257-00	800102701	5 Hole Rod	36.25
217-0670-0	830100115	Wooden Handle	6.00
860100200	860100200	Rod w/ Logo	2.40
860100410	860100410	Rod Fiber Washer	.87
860100700	860100700	Rod "Ohio" Bushing	3.30
26-1251-00	860155006	Red Man	6.85
860155005	860155005	Metal Red Man	18.15
860155010	860155010	Blue Man, Metal	18.15
51-0304-00	860127200	Table Wood Leg, Black	56.70
860155005	860155005	Red Man, Metal	18.15
26-1252-00	860155011	Blue Man	6.85
49-0550-15C	860155020	Yellow Foosball	.95
870040207	870040207	Screw for Dynamo foosball	1.35
43-0253-00	879900800	Nut Lock for Men 10-32	.15
880404000	880404000	Coin Sensor Proximity	18.60
880404100	880404100	Trigger	8.85
26-1123-00	900100110	Rubber Bumper	3.35
26-1253-00	900100100	Rubber Handle	8.30

Visit Our Web Site:
happcontrols.com
for **NEW** Product Updates!!

REPLACEMENT PARTS FOR TORNADO FOOSBALL

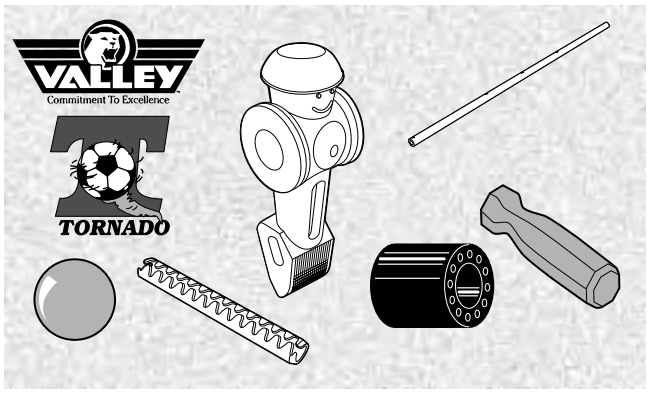

- Complete stock of all your Tornado Soccer parts
- Happ Controls is an official distributor of Tornado / Valley

Part Number	Valley Part No.	Description	Price per ea.
201-0249-0	201-0249-0	Score Post Screw	1.25
205-1513-0	205-1513-0	Field Trim	15.15
205-1514-0	205-1514-0	Leg Leveler	10.95
205-1517-0	205-1517-0	Foosball Red	3.90
205-1518-0	205-1518-0	Score Post Black	6.05
205-1519-0	205-1519-0	Bearing Wrench	6.15
205-1520-0	205-1520-0	Bearing Nut	4.45
205-1521-0	205-1521-0	Bearing Set (2 half bearings)	2.15
205-1522-0	205-1522-0	Black Figure	5.75
205-1523-0	205-1523-0	Yellow Figure	5.75
206-0677-0	206-0677-0	Hinge (set)	30.20
206-0681-0	206-0681-0	2 Man Rod	42.60
206-0682-0	206-0682-0	3 Man Rod	36.25
206-0683-0	206-0683-0	Goalie Rod	43.70
206-0684-0	206-0684-0	5 Man Rod	36.25
206-0750-0	206-0750-0	Score Post Rod	3.90
207-0106-0	207-0106-0	Bumper	3.30
212-0061-0	212-0061-0	Coin Box Lock	12.10
212-0062-0	212-0062-0	Cabinet Lock	12.10
217-0663-0	217-0663-0	Silicone 2 oz	8.50
217-0664-0	217-0664-0	Score Disc (natural)	1.10
217-0665-0	217-0665-0	Score Disc (black)	1.15
217-0667-0	217-0667-0	Punch	6.55
217-0669-0	217-0669-0	Roll Pin	.70
217-0670-0	217-0670-0	Handle	6.00
217-0691-0	217-0691-0	Mechanical Meter	40.80
26-1735-00	217-0791-0	Mechanical Meter	40.80

© HAPP CONTROLS

REPLACEMENT PARTS FOR TOURNAMENT AND PREMIER SOCCER

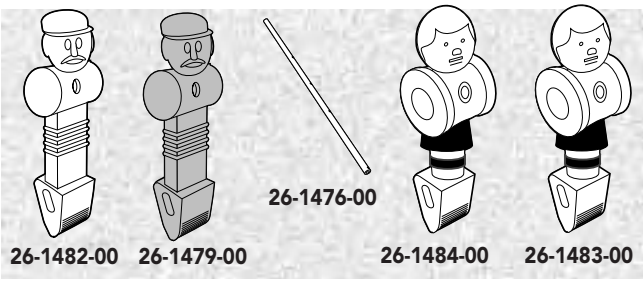

Tournament Soccer Parts

Part Number	Ref. No.	Description	Price per ea.
26-1476-00	TS-48A	2-man Rod	8.15
26-1477-00	TS-48B	1 & 3-man Rod	10.95
26-1478-00	TS-48C	5-man Rod	10.95
26-1479-00	TS-58T	Tan man	1.55
26-1480-00	TS-58Y	Yellow man	1.65
26-1481-00		Gray man	1.55
26-1482-00		White man	1.55
26-1483-00		Red man w/Rounded Foot, Wide Shoulder	1.55
26-1484-00		Blue men w/Rounded Foot, Wide Shoulder	1.30
26-1514-00	T53K	Scoring Unit	7.85
26-1673-00		Metal Face Plate (Chrome), .44for Soccer Table	.44

Premier Soccer Spare Parts

Part Number	Ref. No.	Description	Price per ea.
49-0747-00	23-113	Red man	1.55
49-0914-00	23-114	Blue man	1.90
26-1476-00	23-115	2-man rod	8.15
26-1477-00	23-116	1+3-man rod	10.95
49-0750-00	23-117	5-man rod	12.10
49-0751-00	23-122	Handle, rubber grip	1.65
49-0752-00	23-124	Chrome bumper spring	1.65
49-0753-00	23-125	Lively rubber bumper	.84
49-0915-00	23-126	Plastic rod washer	.30
49-0755-00	23-127	Rod end plastic cap	.30
49-0756-00	23-128	Score markers	8.55
49-0757-00	23-130	Plastic rod bearing	.71
49-0758-00	23-131	Ball entry cup	.95
49-0764-00	23-137	Goalie stop with screw	.71
49-0916-00	23-150	Goalie liner	3.15
49-0760-00	23-153	Player nut & bolt	.30
49-0763-00	23-165	Yellow man, w/out hat	1.90
49-0762-00	23-171	Light gray man	1.90
49-0761-00	23-172	Dark gray man	1.90
49-0917-00	26-166	Tan man	1.90

HOCKEY MALLETS & PUCKS

- High quality
- Mallet will work for both standard white and fluorescent white applications

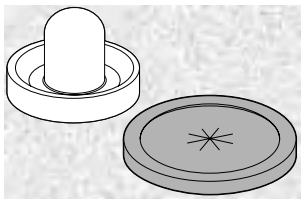

Part Number	Ref.No.		Price per ea.
205-1502-0	205-1502-0	Valley 2.5" Red Puck	3.50
205-1503-0	205-1503-0	3-1/4" Red Nylon Puck	2.50
205-1529-0	205-1529-0	3-1/4" Red Glass Filled Puck	3.15
26-1244-00	860400090	3-1/4" Fluorescent Green Puck	3.75
51-0100-B	860400100	3-1/4" Yellow Puck	3.15
51-0301-01	860400400	3-1/4" White Quiet Puck	3.60
205-1530-0	205-1530-0	Tornado White Mallet	9.15
26-1245-01	860400200	White Fluorescent Mallet	7.25

REPLACEMENT PARTS FOR DYNAMO HOCKEY

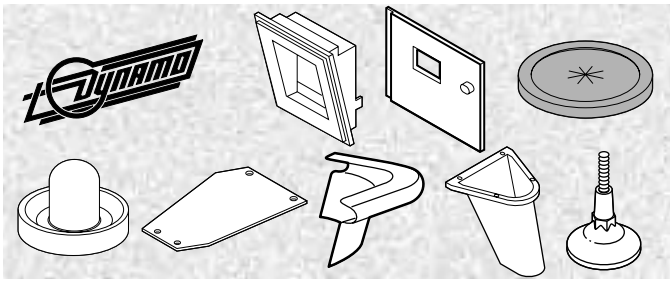

- The most commonly replaced hockey parts

Part Number	Dynamo Ref. No.	Description	Price per ea.
800400300	800400300	Coin Mech Extension	38.20
800400930	800400930	End Goal Blue	123.00
26-1152-00	860000300	Corner Down	38.20
26-1242-00	860000400	Plastic Door Frame	38.20
860000600	860000600	Coin Box Enclosure	22.85
860000810	860000810	Plastic Cashbox	30.10
860000900	860000900	Cashbox Cover	17.45
26-1248-00	860001300	Plastic Leg	44.35
26-1243-00	860001900	Plastic Coin Door	21.85
26-1247-00	60400010	Corner Protector	7.20
26-1244-00	860400090	Green Fluorescent Puck	3.75
51-0100-B	860400100	Dynamo 3-1/4" Yellow Puck	3.15
51-0301-01	860400400	Dynamo 3-1/4" White Quiet Puck	3.60
26-1245-01	860400210	White Fluorescent Mallet	7.25
26-1246-00	860405000	Proximity Trigger Plate	8.15
26-1447-00	870011311	Bolt Rail MS 1/4 -20 x 2"	1.20
26-1446-00	870054105	T-Nut Rail 1/4 -20	1.50
26-1743-00	880400202	Score PCB Display	60.70
26-1277-00	880400300	Solenoid 110 volt	27.75
26-1468-00	880403101	LED PCB Overhead	115.70
26-1250-00	880404200	Score Optic	56.70
882201400	882201400	Overhead Scoring Bulb	69.40
26-1249-00	890001400	Leg Leveler	11.55
26-1749-00	960402802	Drop Pocket	36.75
980400200	980400200	Adhesive Sand Paper	2.20
26-1434-00	980400500	Filter 10" x 20" x 1"	12.50

REPLACEMENT PARTS FOR TORNADO HOCKEY

Part Number		Price per ea.
205-1529-0	3-1/4" Red Glass Filled Puck	3.15
205-1530-0	White Mallet	9.15
205-1531-0	Home Puck House	56.20
205-1502-0	Green 2.5" Home Puck	3.50
217-0684-0	Electric Meter	14.55

CHAMPIONSHIP MERCURY ULTRA POOL CLOTH

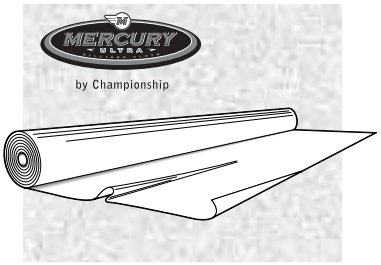

- Used in billiard tournaments
- Professional playing surface, plays true and fast
- High speed; minimal fuzz
- 66" wide, yields all 6 rails from side cut
- With inventory control tape insert
- 60/40 Wool/Synthetic
- Color: Tournament Green
- Sold per yard

Part Number	Description	Price per yd.	35 yds.	70 yds.
26-1534-00	19 oz. Unbacked	22.40	20.05	18.90
26-1534-10	19 oz. Backed	32.60	29.70	27.45

VALLEY TEFLON® ULTRA POOL CLOTH

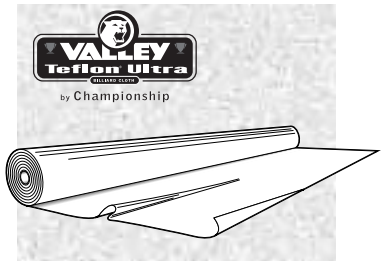

- Mercury Ultra cloth is bathed in DuPont® Teflon® before it is woven to create the only true water resistant cloth
- Perfect for your toughest locations
- Used on all new Valley pool tables
- Professional playing surface plays true and fast
- 66" wide yields all 6 rails from side cut
- 75% wool, 25% nylon
- Cloth weight is net, then backing is added for backed versions
- Guaranteed spill proof and stain resistant
- Backed cloth has special fusible backing
- Sold per yard in half or full bolts only
- Color: Tournament Green

Part Number		Price per yd.	35 yds.	70 yds.
26-1534-15	19 oz. Unbacked	27.30	25.00	24.25
26-1534-20	19 oz. Backed	29.35	27.80	27.05

CHAMPIONSHIP TITAN POOL CLOTH

- 66" width yields all 6 rails from side cut
- True play, semi non-directional
- Durable: 75% wool, 25% nylon
- Specially created for fast play
- Active shearing assures the most level playing surface
- With inventory control tape
- Cloth weight is net, then backing is added for backed versions
- Sold per yard

WITH BACKING		Price per yd.	35 yds.	70 yds.
26-1239-00	21 oz. 66" Standard Green	25.50	25.00	24.25
26-1491-00	21 oz. 66" Dark Green	25.20	22.80	21.65
WITHOUT BACKING		**Price per yd.**	**35 yds.**	**70 yds.**
26-1238-00	21 oz. 66" Standard Green	22.55	20.15	19.95
26-1493-00	21 oz. 66" Dark Green	22.45	21.20	19.95
26-1543-00	21 oz. 66" Tournament Green	21.35	20.20	19.15
26-1469-00	19 oz. Rail Cloth Std. Green (6" W)	3.70	3.30	3.05
26-1547-00	19 oz. Rail Cloth, Fluorescent Blue	3.15	3.00	2.70

CHAMPIONSHIP TITAN PRE-CUT POOL CLOTH BEDS

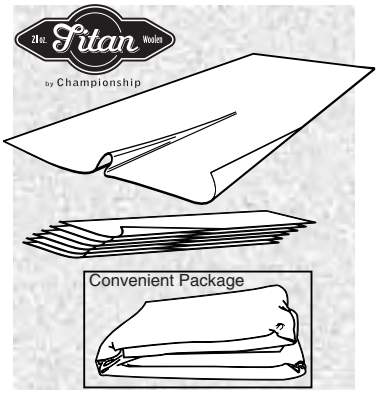

- 21 oz. cloth without backing, 75% wool & 25% nylon
- 100% Inspected-no strings
- Professionally cut to exact size specification for 7 ft., 8 ft., and 9 ft. pool tables
- Lower your inventory costs
- Prevents THEFT
- Includes cloth for bed and 6 rails
- Rails cut vertically from the length, not the width, for easier installation
- Conveniently packaged in a plastic bag

Size:	7' Table	8' Table	9' Table
Price:	88.85 ea. 76.85 ea. L/6	105.70 ea. 93.65 ea. L/6	123.60 ea. 111.55 ea. L/6.
Color:	Part Number	Part Number	Part Number
Standard Green	26-1235-007	26-1235-008	26-1235-009
Dark Green	26-1235-107	26-1235-108	26-1235-109
Electric Blue	26-1235-207	26-1235-208	26-1235-209
Red	26-1235-307	26-1235-308	26-1235-309
Burgundy	26-1235-407	26-1235-408	26-1235-409
Basic Blue	26-1235-507	26-1235-508	26-1235-509
Bottle Green	26-1235-607	26-1235-608	26-1235-609
Camel	26-1235-807	26-1235-808	26-1235-809
Academy Blue	26-1235-907	26-1235-908	26-1235-909
Teal	26-1235-117	26-1235-118	26-1235-119
Eggplant	26-1235-127	26-1235-128	26-1235-129
Mauve	26-1235-137	26-1235-138	26-1235-139
Navy Blue	26-1235-147	26-1235-148	26-1235-149
Wine	26-1235-157	26-1235-158	26-1235-159
Moss Green	26-1235-167	26-1235-168	26-1235-169
Steel Grey	26-1235-177	26-1235-178	26-1235-179
Charcoal Blue	26-1235-187	26-1235-188	26-1235-189
Black	26-1235-197	26-1235-198	26-1235-199
Aztec	26-1235-217	26-1235-218	26-1235-219
Coral	26-1235-227	26-1235-228	26-1235-229
Brick	26-1235-237	26-1235-238	26-1235-239

CHAMPIONSHIP INVITATIONAL POOL CLOTH

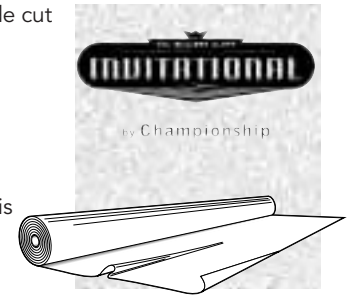

- 66" width yields all 6 rails from side cut
- Long wool fibers reduce pilling
- True play, semi non-directional
- Durable: 75% wool, 25% nylon
- Active shearing assures the most level playing surface
- Cloth weight is net, then backing is added for backed versions
- Standard Green
- Sold per yard

Part Number		Price per yd.	L/35	L/70
26-1237-00	19 oz. Backed		23.45	21.20
26-1236-00	19 oz. Unpacked		19.05	16.65

© HAPP CONTROLS

TableMaster by Saturn POOL CLOTH

- Outstanding Value!
- Durable 75% Wool, 25% Nylon-Blend
- Good durability
- With inventory control tape insert
- Cloth weight is net, then backing is added
- 62" wide
- Various colors available

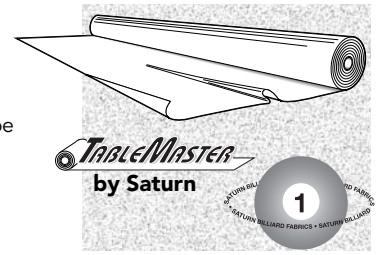

Part Number		Price per yd.	35 yds.	70 yds.
26-1510-00	21 oz. Backed Cloth, Standard Green	22.95	21.70	19.90
26-1509-00	21 oz. Unbacked Cloth, Standard Green	17.85	15.25	14.25
26-1761-00	22 oz. Unbacked Cloth, Dark Green	17.85	15.25	14.25
26-1762-00	22 oz. Unbacked Cloth, Bottle Green	17.85	15.25	14.25
26-1763-00	22 oz. Unbacked Cloth, Wine	17.85	15.25	14.25
26-1764-00	22 oz. Unbacked Cloth, Navy	17.85	15.25	14.25
26-1765-00	22 oz. Unbacked Cloth, Black	17.85	15.25	14.25
26-1766-00	22 oz. Unbacked Cloth, Burgundy	17.85	15.25	14.25

CHAMPIONSHIP INVITATIONAL FAST PACK COMPLETE BED & RAIL SETS

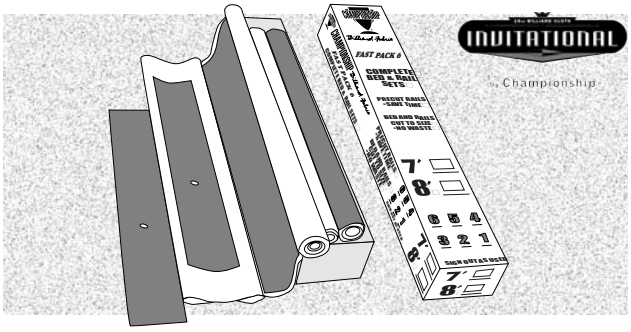

- Convenient - no measuring or cutting required, no rails to strip and cut, eliminates measuring and cutting errors, 100% usable...no wasted material
- Durable 19 oz. cloth plus backing, 75% wool, 25% nylon
- 100% inspected - no strings or flaws
- Fine quality poly-cotton backing enhances smooth play and long wear
- Eliminates theft
- Rails are professionally cut from bolt length, not cross cut for easier installation and more consistent rebound.
- The identical durable high-quality cloth used worldwide by major coin operated pool table manufactures.
- Improves inventory control
- Each set of bed and rails are rolled and placed within a polybag for protection
- 6 Rolls per case

Part Number		Price per ea.	L/12 (1/2 bolt)	L/24 (1 bolt)
26-1276-00	7 Ft - Green	71.35	61.15	59.15
26-1275-00	8 Ft- Green	81.95	71.05	66.25

VALLEY TEFLON® ULTRA PRECUT POOL CLOTH BEDS

- Mercury Ultra cloth is bathed in DuPont® Teflon® before it is woven to create the only true water-resistant cloth
- Perfect for your toughest locations
- Used on new Valley pool tables
- Professional playing surface plays true and fast
- Cut to the exact size specification for 7 ft. pool tables
- 75% wool, 25% nylon
- Backed cloth has special fusible backing
- Guaranteed spill proof and stain resistant
- Includes cloth for bed and 6 rails
- Rails are cut vertically from the length, not the width, for easier installation
- Color: Tournament Green

Part Number		Price per ea.
26-1534-317B	For 7 Ft. Table,19 oz. Unbacked	68.10
26-1534-317	For 7 Ft. Table,19 oz. Backed	81.55

TableMaster by Saturn FAST PACK COMPLETE BED & RAIL SETS

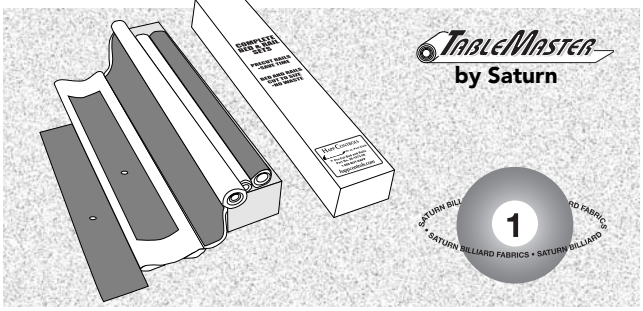

- Convenient - no measuring or cutting required, no rails to strip and cut, eliminates measuring and cutting errors, 100% usable...no wasted material
- 100% inspected – no strings or flaws!
- Durable 75% Wool, 25% Nylon-Blend
- Rails are professionally cut from bolt length, not cross cut for easier installation and more consistent rebound
- Eliminates possible theft
- Bed and rails are rolled and placed within a polybag for protection
- Standard Green color; 19 oz. and 21 oz. available
- 24 beds equal 1 bolt; 12 beds equal 1/2 bolt
- Packed 6 beds per case

Part Number		Price per ea.	L/12	L/24
26-1573-00	For 7 Ft. Table, 21 oz. Unbacked	51.85	48.15	42.20
26-1572-00	For 7 Ft. Table, 19 oz. Backed	60.30	53.05	50.60
26-1574-00	For 8 Ft. Table, 21 oz. Unbacked	60.30	55.05	51.55
26-1275-00	For 8 Ft. Table, 19 oz. Backed	81.95	71.05	66.25

CHAMPIONSHIP TOUR EDITION POOL CLOTH

- Used by the most discriminating players
- Heavy weight 24 oz. cloth unbacked
- 70/30 Wool/Nylon blend
- 66" wide, yields all 6 rails from side cut
- Color: Tournament Green
- Sold per yard

Part Number		Price per yd.	35 yds.	70 yds.
26-1542-00	24 oz. 66" Wide Tournament Green	49.75	47.45	45.90

TABLEMASTER POOL CLOTH

- Outstanding Value!
- Durable 75% Wool, 25% Nylon-Blend
- With inventory control tape insert
- Cloth weight is net, then special adhesive backing is added
- 62" wide; Standard green
- Sold only in bolts (Bolts average 40 to 45 yards)

Part Number		Price per yd.
26-1503-10	19 oz. Backed Cloth, Standard Green	18.35

BUMPER TUBE SLIP-ON RAIL CLOTH

- Fits 7 ft., 7-1/2 ft., 8 ft. table rails
- Eliminates gluing & cutting of rail cloth
- Easily installed in minutes
- 6 pieces per set

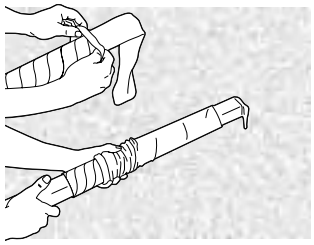

Part Number		Price per set
26-1113-00	Slip on Rail Cloth – Dark Green	30.15
26-1114-00	Slip on Rail Cloth – Standard Green	30.15

SLATE-MATE RECOVERY KIT

- Comes equipped with everything needed to professionally recover your table
- Eliminates gluing on slate & rails
- Each kit includes: 1 pre-cut green cloth bed, 1 set of 6 slip-on type rail cloth, 1 rail cloth applicator tube, 1 set of 8 velcro strips, 1 set of 6 metal reinforcement strips and 2 pressure sensitive spots
- Instructions included

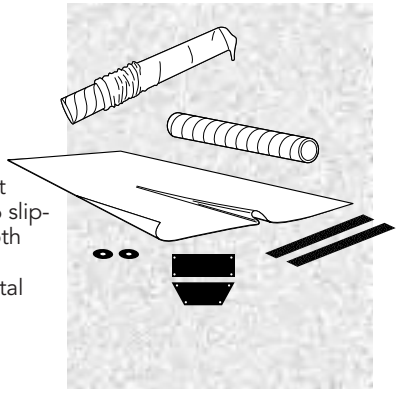

Part Number		Price per kit
26-1111-00	For Valley, Dynamo, Champion 7-1/2" Table	150.60
26-1262-00	For US Billiards 82" x 42"	167.50
26-1518-00	For Valley 8' Table	151.80

HAPP CONTROLS SELLS BRAND NAME QUALITY

© HAPP CONTROLS

MALI HYDRA POOL CLOTH

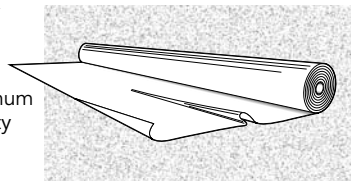

- Mali's latest takes games play to a new level
- 75% wool, 25% nylon
- Hard pressed finish for maximum speed and absolute uniformity
- Sheared to accurate specifications with state of the art technology
- Color: Tournament Green
- 62" wide
- Sold per yard
- 70 yards per bolt, minimum order 35 yards

Part Number		Price per yd.	35 yds.	70 yds.
26-1838-00	19 oz. Unbacked, Tournament Green	18.85	17.55	16.40
26-1839-00	19 oz. Backed, Tournament Green	30.55	28.70	26.50

MALI POOL CLOTH

- Non-directional
- Original cloth used by leading manufacturers of coin-operated pool tables
- Sold per yard
- 62" Wide

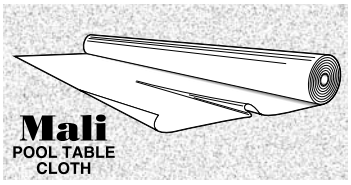

WITH BACKING		Price per yd.	35 yds.	70 yds.
26-1019-00	19 oz. Dark Green #924-200	22.90	20.50	19.35
26-1006-00	19 oz. Standard Green #924-22	22.90	20.50	19.35
26-1467-00	19 oz. Electric Blue #924-402	24.75	22.35	21.20
26-1502-00	19 oz. Gold # 924-196	22.25	20.45	19.30
26-1439-00	19 oz. Red #924	23.55	21.20	19.95
26-1038-00	21 oz. Standard Green #920-22	25.35	22.90	21.75
26-1281-00	21 oz. Dark Green #920-200	25.35	22.90	21.75
26-1279-00	21 oz. Electric Blue #920-402	26.00	23.60	22.40
26-1519-00	21 oz. Copper #920-198	26.00	23.60	22.40
26-1740-00	20.5 oz. Dark Green #922-201	19.65	19.15	18.90

WITHOUT BACKING		Price per yd.	35 yds.	70 yds.
26-1044-00	19 oz. 62" Dark Green #824-200	19.35	16.95	15.75
26-1046-00	19 oz. 62" Standard Green #824-22	19.35	16.95	15.75
26-1459-00	19 oz. 62" Red #824	19.95	17.50	16.35
26-1045-00	21 oz. 62" Standard Green #820-22	22.90	20.50	19.35
26-1291-00	21 oz. 62" Dark Green #820-200	22.90	20.50	19.35
26-1521-00	21 oz 62" Canadian Green #820-34	-	-	22.90
26-1329-00	21 oz. 62" Electric Blue #820-402	21.55	19.15	17.90
26-1498-00	21 oz. 62" Spruce #822-2427	19.35	16.95	15.75
26-1512-00	21 oz. 62" Plum #6391	22.90	20.50	19.35

RAIL CLOTH W/O BACKING 5-1/2"(W)		Price per yd.	35 yds.	70 yds.
26-1036-99	19 oz. Standard Green	3.60	3.20	3.10
26-1422-00	19 oz. Dark Green	3.75	3.20	3.10

MALI TEFLON® HYDRA POOL CLOTH

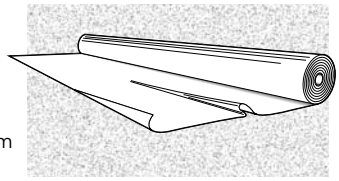

- Mali takes it's new Hydra pool cloth and bathes it in Dupont" Teflon" to offer water and stain resistance
- Great for those tough locations
- 75% wool, 25% nylon
- Hard pressed finish for maximum speed and absolute uniformity
- Sheared to accurate specifications with state of the art technology
- Color: Tournament Green
- 62" wide
- Sold per yard
- 70 yards per bolt, minimum order 35 yards

Part Number		Price per yd.	35 yds.	70 yds.
26-1840-00	19 oz. Unbacked, Tournament Green	23.45	22.95	22.40
26-1841-00	19 oz.Backed Tournament Green	30.55	29.55	28.55

MALI PRE-CUT POOL CLOTH BEDS

- 21 oz. without backing
- 75% wool, 25% nylon
- Professionally cut for 7 ft. and 8 ft. tables
- 100% inspected – no strings
- Includes cloth for beds and 6 rails
- Lowers inventory costs
- 22 other colors available
- Conveniently packaged in a plastic bag

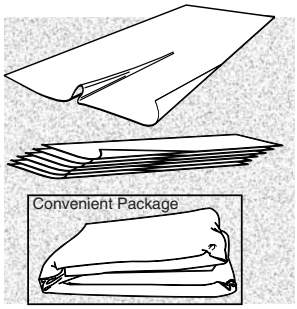

Size:	7' Table	8 ' Table
Price:	57.35 ea. 51.65 ea. L/6	66.50 ea. 61.95 ea. L/6

Color:	Part Number	Part Number
Standard Green	26-1615-00	26-1626-00
Dark Green	26-1613-00	26-1624-00
Charcoal	26-1606-00	26-1617-00
Cadet Blue	26-1607-00	26-1618-00
Burgundy	26-1608-00	26-1619-00
Red	26-1610-00	26-1620-00
Blue	26-1609-00	26-1621-00
Electric Blue	26-1611-00	26-1622-00
Wine	26-1612-00	26-1623-00
Purple	26-1614-00	26-1625-00

MALI 923-23 POOL CLOTH

- 19 oz. backed
- Standard Green
- Non-Directional
- Original cloth used by leading manufacturers of coin-operated pool tables
- Durable Wool / Nylon blend
- Sold per yard / minimum 45 yds.

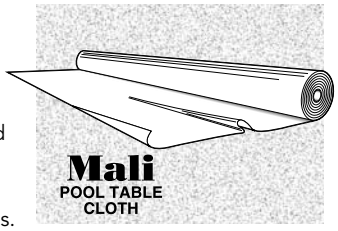

Part Number		Price per yd.
26-1448-00	19 oz. Backed, Standard Green	20.85

3M™ SPRAY ADHESIVE

3M SPRAY ADHESIVE #74
- Quick tack in bonding most materials: cloth, wood, plastics and metal
- 23.25 fl. oz.
- 12 cans per case

3M SPRAY ADHESIVE #76
- Longer tack time – bonding in 10 minutes for a single sprayed surface, 1 hour for two coated surfaces
- Adjustable spray allows varied widths to be sprayed, eliminates spraying of too much adhesive
- 23.5 fluid oz.
- 12 cans per case

3M SPRAY ADHESIVE #77
- Will initially "grab" the material, but allows time to adjust before permanent bonding
- 23 fluid oz.
- 12 cans per case

3M SPRAY ADHESIVE #90
- Exceptional strong contact adhesive
- One minute dry time
- Adjustable spray tip allows varied widths to be sprayed
- Bonds to decorative laminates, wood, metal, plastics and many other materials

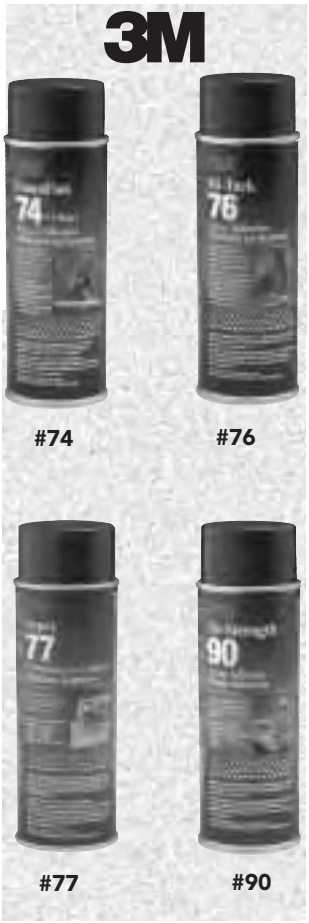

NOTE: #74, #76, #77 CANNOT BE SOLD IN THE STATE OF CALIFORNIA

Part Number		Price per ea.	L/12
29-1006-00	3M Spray Adhesive #74	12.65	12.10
29-1007-00	3M Spray Adhesive #76	11.55	11.00
29-1008-00	3M Spray Adhesive #77	10.75	9.85
29-1069-00	3M Spray Adhesive #90	17.10	14.70

HAPP CONTROLS SPRAY ADHESIVE

- Pressure sensitive adhesive
- Strong, instant tack
- 20 oz. can
- 12 cans per case

HAPP CONTROLS

NOTE: CANNOT BE SOLD IN THE STATE OF CALIFORNIA

Part Number		Price per ea.	L/12
29-1017-00	Happ Controls Spray Adhesive	7.30	6.15

BARGE CEMENT

- Great for recovering of pool tables
- Bonds clean,dry surfaces together
- Bonds many times stronger than the strength of item glued

Part Number		Price per ea.	L/12
29-1024-00	Barge Cement, 2 oz. Tube	4.90	3.75

BALLSTAR POOL BALL CLEANER & POLISHER

- The greatest ball cleaning machineto come on the U.S. market in years!
- Automatically cleans and polishes an entire set of balls in less than 2 minutes!
- Portable machine is very easy to use and maintain
- Eight blade impellers keep balls separate during the cleaning / polishing process
- Features: Three cleaning settings, simple rotary dial on / off / time switch and 150W motor
- Includes enough cleaner / polishing solution for 500 cycles

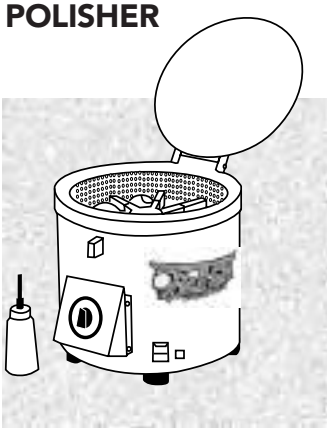

Part Number	Description	Price per ea.
26-1561-00	Ballstar Pool Ball Cleaner & Polisher	392.20
26-1562-00	Ballstar Cleaner & Polish	18.05

WILDCAT POOL BALL CLEANER

- Specially designed to clean and polish billiard balls
- WIll help retard the deterioration of cloth by keeping billiard balls clean
- Ideal for use by hand or machine
- Cleans and polishes billiard balls in 1 step
- 16 oz. bottle
- 12 per case

Part Number		Price per ea.	L/12
26-1263-00	PBC-15 Pool Ball Cleaner	9.75	9.65

DO YOU WANT TO KNOW EACH TIME YOUR ORDER SHIPS OUT?

e-mail notification and order **tracking information** is now available from Happ Controls! Contact your sales representative or e-mail our customer service department at: **info@happcontrols.com** with your account information.

PROFESSIONAL POOL BALL SETS

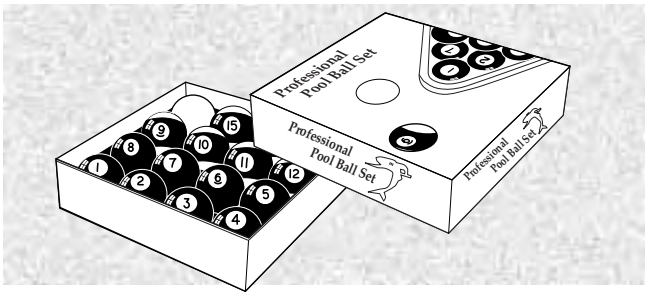

- Extreme workmanship is used within these high quality Polyester Resin Billiard Ball Sets.
- Close attention is paid to the color process to ensure consistent color
- The number is inlaid on both sides of the ball and the color is specially treated to prevent wear after the heaviest of table play.
- Number in strip, 9-15 balls
- Balls have a high professional high glossy finish.
- Weight, Hardness and Roundness of balls all meet international billiards standards
- Various types of sets available

Part Number		Price per set	L/6	L/12
26-1017-00	Ball Set W/ 2-1/4" Cue Ball	41.65	37.50	34.35
26-1017-10	Ball Set W/ 2-3/8" Cue Ball	41.65	37.50	34.35
26-2116-00	Ball Set W/ 2-1/4" Magnetic Cue Ball	45.00	40.60	37.50
26-1017-88	Ball Set W/ Twin 8 Balls	45.00	40.60	37.50

REPLACEMENT BALLS

Part Number		Price per set	L/16
26-1027-01E	Replacement 2-1/4" #1 Ball	3.25	2.85
26-1027-02E	Replacement 2-1/4" #2 Ball	3.25	2.85
26-1027-03E	Replacement 2-1/4" #3 Ball	3.25	2.85
26-1027-04E	Replacement 2-1/4" #4 Ball	3.25	2.85
26-1027-05E	Replacement 2-1/4" #5 Ball	3.25	2.85
26-1027-06E	Replacement 2-1/4" #6 Ball	3.25	2.85
26-1027-07E	Replacement 2-1/4" #7 Ball	3.25	2.85
26-1016-00	Replacement 2-1/4" #8 Ball	3.25	2.85
26-1027-09E	Replacement 2-1/4" #9 Ball	3.50	3.15
26-1027-10E	Replacement 2-1/4" #10 Ball	3.50	3.15
26-1027-11E	Replacement 2-1/4" #11 Ball	3.50	3.15
26-1027-12E	Replacement 2-1/4" #12 Ball	3.50	3.15
26-1027-13E	Replacement 2-1/4" #13 Ball	3.50	3.15
26-1027-14E	Replacement 2-1/4" #14 Ball	3.50	3.15
26-1027-15E	Replacement 2-1/4" #15 Ball	3.50	3.15

BELGIAN ARAMITH BALLS

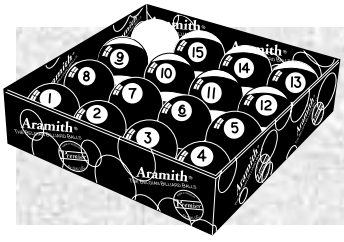

Belgian "Premier" Pool Ball Set

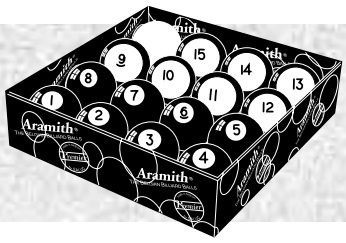

Belgian "Crown Deluxe" Pool Ball Set

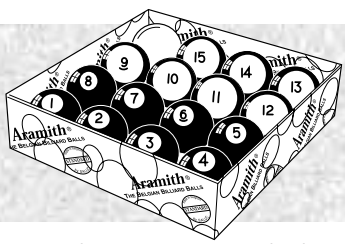

Belgian "Crown Standard" Pool Ball Set

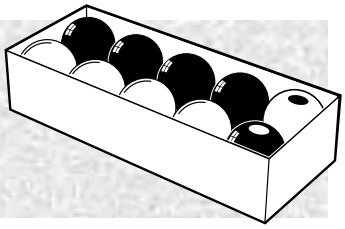

Belgian "Bumper" Pool Ball Set

Saluc S.A. Belgium is the world's largest manufacturer of Pool, Snooker and Carom balls exported worldwide under the **"ARAMITH"** brand name.

The Molecular structures have been engineered to bring players all the characteristics to optimize their play while lengthening ball and cloth life. The mechanical and the exceptional heat resistance of the Aramith resin avoid rub marks more than any other ball, keeping the glossy polish to the ball for a much longer time. Precision grinding technology guarantees high consistent tolerance and sphericity throughout each Aramith balls set. This together with computerized color formulations and meticulously CNC engraved ball numbers result in beautifully crafted billiard balls.

The **"Belgian Aramith Billiard Balls"** is for almost half a century an ambassador and signature for true and unequaled quality.

- World's finest top quality billiard balls for true play
- Genuine Belgian cast Phenolic

aramith

BELGIAN ARAMITH BALLS

Part Number		Price per set	L/6
26-1445-00	Belgian "Super Aramith Pro" Set with 2-1/4" Cue Ball	158.05	137.65
26-1106-00	Belgian "Premier" Set with 2-1/4" Cue Ball	89.75	81.55
26-1104-00	Belgian "Crown Deluxe" Set with 2-1/4" Cue Ball	81.55	71.35
26-1028-00B	Belgian "Crown Standard" Set with 2-1/4" Cue Ball	66.25	57.10
26-1028-001B	Belgian "Crown Standard" Set with 2-3/8" Cue Ball	66.25	57.10
26-1069-00	Belgian "Bumper" Set	32.55	29.00

BELGIAN ARAMITH REPLACEMENT BALLS

Part Number		Price per ea.	L/16
26-1027-01B	Belgian 2-1/4" #1 Ball	5.70	5.15
26-1027-02B	Belgian 2-1/4" #2 Ball	5.70	5.15
26-1027-03B	Belgian 2-1/4" #3 Ball	5.70	5.15
26-1027-04B	Belgian 2-1/4" #4 Ball	5.70	5.15
26-1027-05B	Belgian 2-1/4" #5 Ball	5.70	5.15
26-1027-06B	Belgian 2-1/4" #6 Ball	5.70	5.15
26-1027-07B	Belgian 2-1/4" #7 Ball	5.70	5.15
26-1027-08B	Belgian 2-1/4" #8 Ball	5.70	5.15
26-1027-09B	Belgian 2-1/4" #9 Ball	7.40	6.65
26-1027-10B	Belgian 2-1/4" #10 Ball	7.40	6.65
26-1027-11B	Belgian 2-1/4" #11 Ball	7.40	6.65
26-1027-12B	Belgian 2-1/4" #12 Ball	7.40	6.65
26-1027-13B	Belgian 2-1/4" #13 Ball	7.40	6.65
26-1027-14B	Belgian 2-1/4" #14 Ball	7.40	6.65
26-1027-15B	Belgian 2-1/4" #15 Ball	7.40	6.65
26-1274-00	Belgian 2-3/4" #8 Ball	7.95	6.85

PROFESSIONAL 8 BALL

- Top quality
- 2-1/4" size
- Most commonly replaced billiard ball

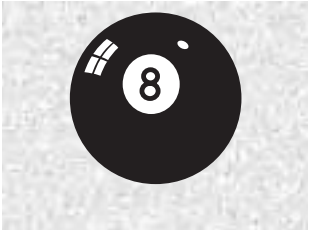

Part Number		Price per ea.	L/16
26-1016-00	Professional 8 Ball	3.25	2.85

CUE BALLS

- Top quality
- Various types available

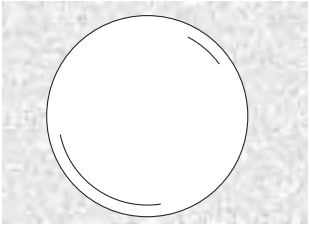

Part Number		Price per ea.	L/16
26-1025-00	Universal "B" 2-1/4" Cue Ball	10.95	9.70
26-1473-00	Economy 2-1/4" Magnetic Cue Ball	8.55	7.30
26-1032-10	"New" Valley/Dynamo Magnetic Cue Ball Ref. No. 209-0005-5	25.45	17.30
26-1033-00	Belgian 2-1/4" Cue Ball	5.90	5.40
26-1034-00	Belgian 2-3/8" Cue Ball	4.65	4.40
26-1056-01	Red Dot Cue Ball (economy)	7.95	7.30
26-1056-02	Red Dot Cue Ball (f/Dynamo), by Belgian	9.65	8.50
26-1056-00	Belgian Green Dot Cue Ball, by Dynamo (weighted & magnetic combo)	21.75	21.25
26-1304-00	Economy 2-1/4" Cue Ball	3.95	3.75
26-1304-01	Economy 2-3/8" Cue Ball	3.95	3.75

PLASTIC POOL BALL RACKS

- Heavy duty, high impact black plastic
- Curved bottom slides over pool cloth easily, preventing rips and snags in the cloth

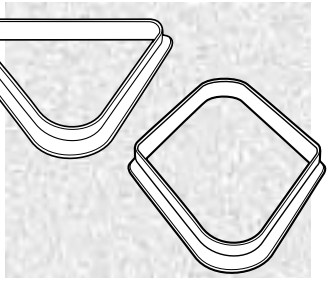

Part Numbe		Price per ea.	L/12
26-1011-00	15 Ball Plastic Triangle Rack	2.20	2.20
26-1004-00	9 Ball Plastic Rack	2.50	2.50

WOOD POOL BALL RACKS

- Attractive wood racks
- Great for home or bar locations

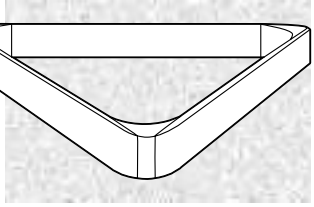

Part Number		Price per ea.	L/12
26-1076-00	15 Ball Wood Triangle Rack	6.80	6.80
26-1400-00	15 Ball Wood Triangle Rack w/Gliders	8.50	8.50
26-1004-99	9 Ball Wood Rack	6.45	6.45

MARBLEIZED POOL BALL SET

- Beautiful marbleized texture
- High Gloss shine
- Includes a 2-1/4" cue ball
- Used in most major 9-ball tournaments

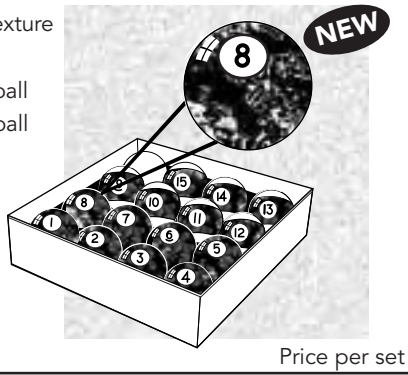

Part Number		Price per set
26-1017-15	Marbleized Pool Ball Set	93.65

BLACK LIGHT POOL TABLE KIT

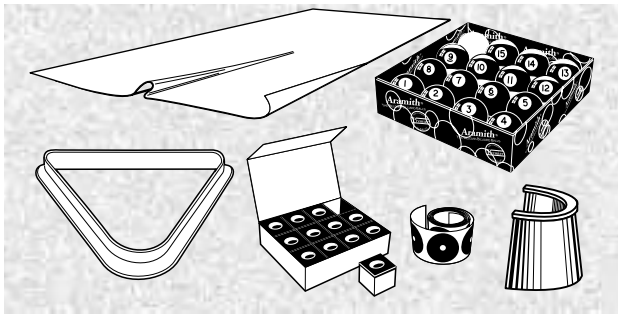

- Add excitement and dollars with this great new look
- Includes:
  - 4 yds. 21 oz. black cloth
  - 1 yd. fluorescent blue cloth
  - 1 set Belgian Premier fluorescent balls
  - 1 set fluorescent pocket liners
  - 1 fluorescent triangle
  - charcoal chalk

Part Number		Price per ea.
26-1508-00	Black Light Pool Table Kit	466.95
26-1744-00	Replacement Cue Ball	45.85
26-1516-00	Black Light Ball Set	248.90

BLACK LIGHT BILLIARD BALL SET

- Genuine Belgian cast Phenolic fluorescent balls
- World's finest top quality billiard balls for true play
- Regulation size 2-1/4" ARAMITH balls
- Add excitement and dollars with this great new look
- Get a whole new dimension in billiard play

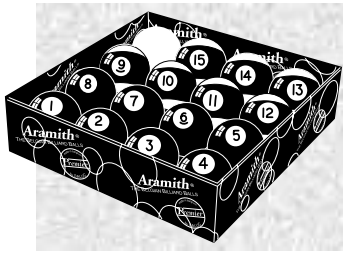

Part Number		Price per set
26-1516-00	Black Light Billiard Ball Set	248.90

BELGIAN "STONE BALL" BILLIARD BALL SET

- Manufactured by Saluc S. A.
- World's finest billiard balls for true play
- Genuine Belgian cast phenolic
- These balls seem to come from the flintstone age
- Adds a very attractive dimension to your billiard table
- Includes a 2-1/4" cue ball

Part Number		Price per set
26-1803-00	Belgian "Stone Ball" Billiard Ball Set	101.95

© HAPP CONTROLS

PLASTIC POOL BALL TRAY

- Holds 15 pool balls plus cue ball
- Made of high impact, black plastic
- Stands up to the toughest of locations

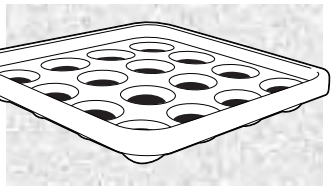

Part Number		Price per ea.	L/12
26-1071-00	Plastic Pool Ball Tray	3.15	2.50

POOL TABLE BRUSH

- Top quality pool table brush with nylon bristles
- Natural finish with flared bristles on ends for easy cleaning under rails
- Various sizes available
- 12 per box

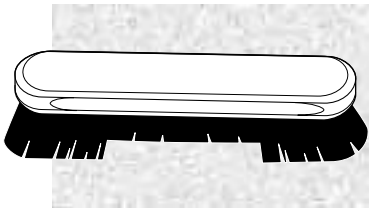

Part Number		Price per ea.	L/12
26-1018-00	9" Pool Table Brush	3.25	2.70
26-1344-00	10-1/2" Pool Table Brush	4.85	4.65

RAIL BRUSH

- Helps clean under and around rails
- 8-1/2" long

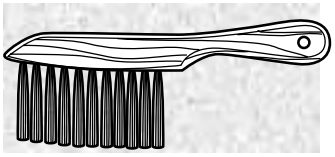

Part Number		Price per ea.
26-1335-00	Rail Brush	1.70

COMBINATION POOL TABLE AND RAIL BRUSH

- 8-1/2" long
- Unique combination pool table and rail brush
- Quality nylon bristles
- Wood handle
- Cherry stain

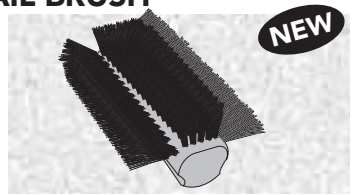

Part Number		Price per ea.
26-1680-00	Combination Brush	5.80

TEFCO MASTER TABLE SPOTS

- Self adhering and double gummed
- Sold as full tin only
- 12 spots per tin
- Black with white center dot
- 1-5/16" diameter

Part Number		Price per tin	L/12
26-1131-00	Tefco Pool Table Spots	1.65	1.60

DELUXE POOL TABLE SPOTS

- Pressure sensitive
- 100 per roll
- Black with white center dot
- 1-1/2" diameter

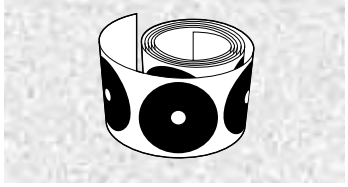

Part Number		Price per roll	L/3
26-1090-00	Deluxe Pool Table Spots (Roll of 100)	4.30	3.95

HORIZON ELECTRONIC RETRO-FIT POOL TABLE KIT

- This unique product provides a great strategic promotional tool to benefit both the operator and locations
- Programmable 7-day week/24 hour clock allows different features and functions on different days of the week and at different times during the day depending on the needs of the location
- Programmable pricing and features allow the operator to set pricing to maximize play during off-peak hours and maximize income during peak play periods
- Convert your push chute door to an electronic coin door with dollar bill and roll-down coin acceptor
- Reduces the amount of coins that must be handled
- Compatible with all major brand pool tables
- Simple installation
- One-year warranty
- LCD and LED Matrix displays
- 25 cent coin acceptor enables the prices to be programmed in increments of 25 cents
- Steel door entrance with 3-way locking system
- Standard game pricing with up to 3 levels
- Time pricing – up to 3 levels
- "Happy hour" pricing – 2 sessions daily
- Speed pool with built-in clock
- Free play setting for leagues and promotions eliminate the need to supply locations with a key to the tables
- Maximum cash limit setting
- Game audits and data
- Promotional win feature
- Dollar bill validator sold separately (Mars AE2451U3E or AE2451U5E)

Kit Includes: Steel door with 3-way locking system, security bar, bill validator blanking plate, coin acceptor, main controller board, LCD and LED matrix displays, illuminated play buttons, coin meter, power supply, motor with crank arm, free play key switch, wiring harness, instruction manual and all necessary hardware

Part Number		Price per ea.
26-1728-00	Electronic Retro-fit Kit for pool tables	1,145.00

WEB POCKETS

- 6-7/8" shallow depth pocket
- Molded durable black plastic
- Set of 6

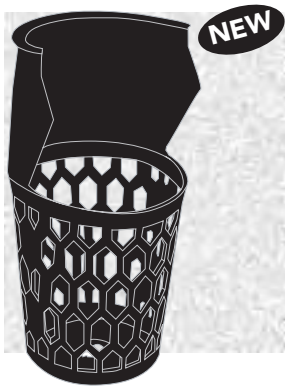

Part Number		Price per set
26-1381-10	Web Pockets Black Plastic	8.15

PREMIER POOL TABLE ACCESSORY KIT

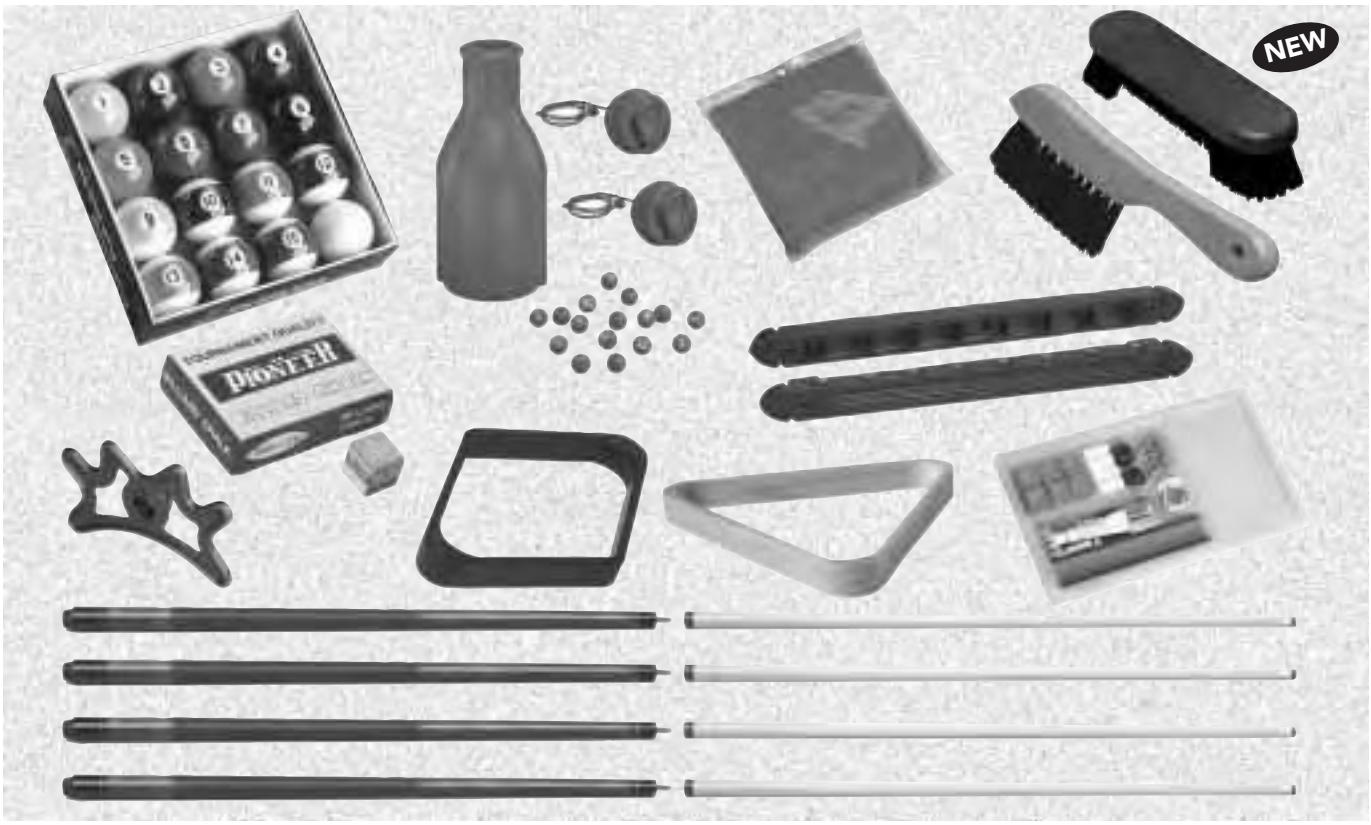

Kit Includes:

- Professional quality 2-1/4" pool ball set with numbers in the stripe
- (4) 2-piece Canadian Maple cue sticks
- 2-piece bridge stick
- Bridge head
- 15 ball wood triangle rack
- 9 ball wood rack
- 6 cue wood wall rack
- Shaker bottle
- Deluxe peas – Set of 16
- (2) rubber cue chalk holders
- 9" pool table brush
- Rail brush
- (12) pieces blue cue chalk
- Green vinyl pool table cover with weighted corners, Fits all 9' tables, 124" x 72"
- Cue tip repair kit

Part Number		Price per kit
26-1779-00	Premier Pool Table Accessory Kit	91.75

WILDCAT FELT CLEANER

- Pool cloth cleaner; also great for Black-Jack, Craps & other games with felt cloth coverings
- Heavy duty cleaner designed for dirty surfaces
- No rinsing needed
- Also cleans metal, plastic, wood & painted surfaces
- 20 oz. aerosol can
- 12 per case

Part Number		Price per ea.	L/12
29-1001-00	APC-30 Felt Cleaner	10.90	9.90

SCOT'S CITRUS CLEAN REMOVER

- Dissolves tape, tar, gum, permanent marker, glue, grease and more
- Removes chewing gum, price stickers, lipstick, tape residue, crayon, oil, and more
- Water-based non-oily formula contains no petroleum distillates
- Great for use on video games, vending machines and slot machines
- Clean smelling citrus scent
- 8 fl. oz. bottle
- Packed 6 per case

Part Number		Price per ea.	L/12
29-0237-00	Scot's Citrus Clean Renover	3.85	3.75

© HAPP CONTROLS

48" DELUXE 3 LAMP GREEN SHADE BILLIARD LIGHT

- Includes three 14" shades (Green Plastic)
- Traditional green shades add class to any location
- Mounting hardware includes: 6 ft. chain, wire and plug
- Made in the U.S.A.
- Some assembly required
- Bulbs sold separately

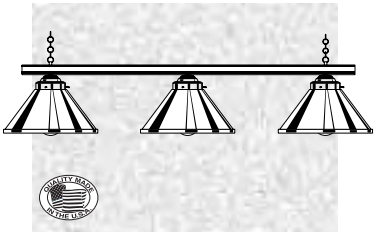

Part Number		Price per ea.
26-1001-00	48" Deluxe 3 Lamp Green Shade Billiard Light	90.40
26-1001-16	48" Deluxe 3 Lamp Black Shade Billiard Light	95.25
91-3060-00	60 Watt Incandescent Bulb for Billiard Light	1.05
26-1001-000	48" Brass Bar Only	62.75

28" DELUXE 2 LAMP GREEN SHADE BILLIARD LIGHT

- Includes two 14" shades (Green Plastic)
- Traditional green shades add class to any location
- Mounting hardware includes: 6 ft. chain, wire and plug
- Made in the U.S.A.
- Some assembly required
- Bulbs sold separately

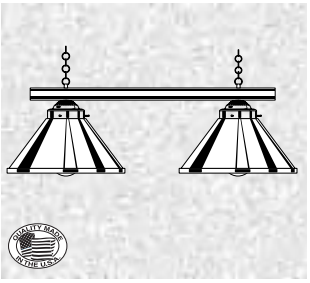

Part Number		Price per ea.
26-1002-00	28" Deluxe 2 Lamp Green Shade Billiard Light	82.00
91-3060-00	60 Watt Incandescent Bulb for Billiard Light	1.05

14" DELUXE SINGLE LAMP BILLIARD LIGHT

- Includes one 14" shade (Red or Green Plastic)
- Traditional green shade adds class to any location
- Mounting hardware includes 3 ft. chain, wire and plug
- Made in the U.S.A.
- Some assembly required
- Bulb sold separately

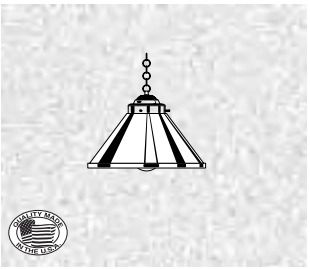

Part Number		Price per ea.
26-1003-00	14" Deluxe Single Lamp Green Shade Billiard Light	20.50
26-1003-10	14" Deluxe Single Lamp Red Shade Billiard Light	20.50
91-3060-00	60 Watt Incandescent Bulb for Billiard Light	1.05

LAMP SHADES

- Individual shade sold separately
- Tough, durable plastic or brass
- Translucent

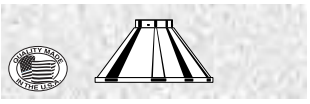

Part Number		Price per ea.	L/12
26-1052-00	Green -Opaque	11.30	10.90
26-1471-00	Dark Blue -Opaque	11.30	10.90
26-1472-00	Light Blue -Opaque	11.30	10.90
26-1052-10	Red - Opaque	11.30	10.90
26-1052-16	Black-Opaque	11.30	10.90
26-1463-00	Cream - Opaque	11.30	10.90
26-1109-00	Solid Green - Opaque	11.30	10.90
26-1110-00	Ribbed Standard Green - Translucent	26.95	26.00
26-1261-00	Brass	50.10	48.65
26-1052-100	Burgundy - Translucent	22.40	21.65
26-1052-10R	Red, Ribbed, Opaque	22.40	21.65

48" DELUXE BRASS SHADE BILLIARD LIGHT

- Includes 14" brass shades
- Brass shades add a "touch of class" to any location
- Mounting hardware includes: 6 ft. chain, wire and plug
- Made in the U.S.A.
- Some assembly required
- Bulbs sold separately

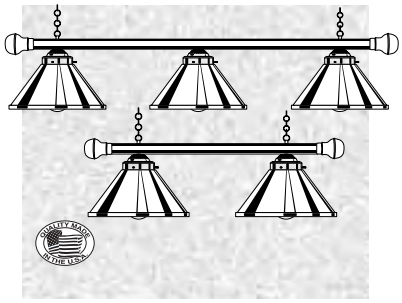

Part Number		Price per ea.
26-1001-00BR	Deluxe 3 Lamp Brass Shade Billiard Light	198.80
26-1002-00BR	Deluxe 2 Lamp Brass Shade Billiard Light	179.55
91-3060-00	60 Watt Incadescent Bulb for Billiard Light	1.05

36" TWIN BILLIARD SHADE

- Simulated leaded-glass styling
- Multi-color design
- Made of reinforced fiberglass
- Size: 33"L x 18"W x 10"D
- Includes all wiring and mounting hardware

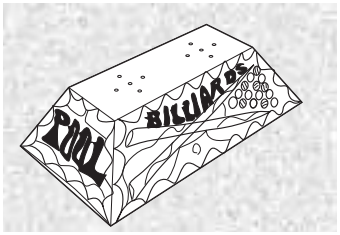

Part Number		Price per ea.
26-1419-10	36" Twin Billiard Shade	72.15

SWAG FIXTURE KITS

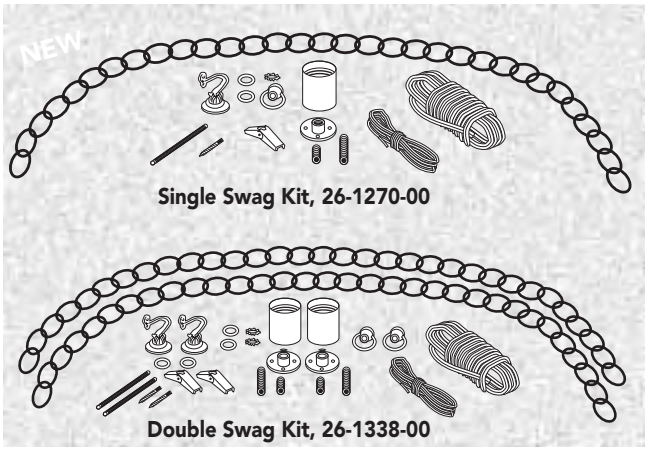

Single Kit Includes:
- 3 foot brass finish chain
- 12 feet of wire
- Ceramic base socket
- Other miscellaneous mounting hardware as shown

Double Kit Includes:
- Two 3 foot brass finish chains
- 12 feet of wire
- Two ceramic base sockets
- Other miscellaneous mounting hardware as shown

Part Number		Price per ea.	L/6
26-1270-00	Single Swag Fixture Kit	10.55	9.55
26-1338-00	Double Swag Fixture Kit	14.55	13.40

CUE TOP SANDER

- Gives a perfectly flat base for gluing leather tips
- Quickly sands down old glue and wood cue

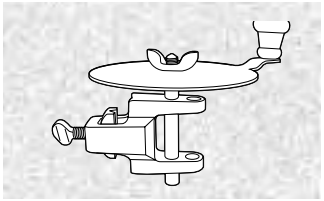

Part Number		Price per ea.
26-1103-00	Cue Top Sander	13.55
26-1102-00	Garnet Disk for Cut Top Sander	1.30

CUE TIP CEMENT

- Great for attaching leather cue tips to cue stick
- Will not harm leather tip
- Small size makes it easy to carry around for those "on the spot" repairs

Part Number		Price per ea.	L/12
26-1107-00	Cue Tip Cement, by Tweeten	3.15	2.95

CUE TIP REPAIR CLAMPS

- Used to repair tips on cue sticks
- Heavy duty

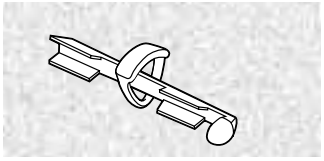

Part Number		Price per ea.	L/24
26-1077-00	Aluminum Cue Tip Repair Clamp	.97	.87
26-1340-00	Bronze Cue Tip Repair Clamp	1.60	1.40

CUE TIP REPAIR KIT

- Contains: Leather cue tip, cement, spots, mending tissue, cue tip trimmer, cue tip clamp and chalk.
- Manufactured by Tweeten

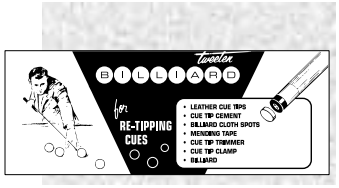

Part Number		Price per ea.
26-1268-00	Cue Tip Repair Kit	14.40

DO YOU WANT TO KNOW EACH TIME YOUR ORDER SHIPS OUT?

e-mail notification and order **tracking information** is now available from Happ Controls! Contact your sales representative or e-mail our customer service department at: **info@happcontrols.com** with your account information.

ASSORTED SLIP-ON CUE TIPS & SLEEVES

- No adhesives or clamps needed
- High-grade leather tip with sleeve fits right over the old ferrule
- Box of 100 assorted contains:
  (10) 11 mm (10) 11.5 mm
  (25) 13.5 mm (10) 12 mm
  (10) 14 mm (10) 12.5 mm
  (25) 13 mm

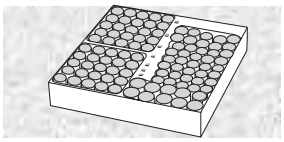

Part Number		Price per box
26-1583-00	Assorted Slip-On Cue Tips & Sleeves	14.90

SLIP-ON CUE TIP AND SLEEVE

- No adhesives or clamps needed
- High grade leather tip w/ sleeve fits right over the old ferrule
- 100 per box

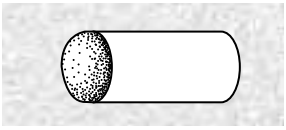

Part Number		Price per box
26-1053-00	11 mm	10.95
26-1050-00	11.5 mm	10.95
26-1030-00	12 mm	10.95
26-1031-00	12.5 mm	10.95
26-1029-00	13 mm	10.95
26-1039-00	13.5 mm	10.95
26-1117-00	14 mm	10.95

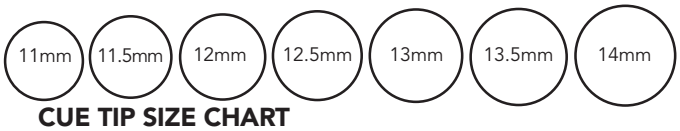

CUE TIP SIZE CHART

Illustrations are actual size. Simply place tip to be replaced over illustration to determine the correct size to order.

FERRULES

- White hard rod fiber
- Available in Glue on or Screw on types
- Minimum order 10

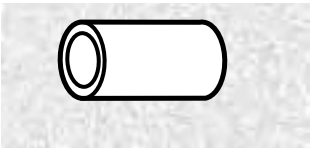

Part Number	Size	Type	Color	Price per ea.	L/100
26-1240-00	12mm	Glue on	White	.33	.31
26-1241-00	13mm	Glue on	White	.30	.25
26-1240-99	12mm	Screw on	White	.30	.25
26-1241-99	13mm	Screw on	White	.30	.25

LEATHER CUE TIPS

- Top quality leather tips
- Packed 50 per box

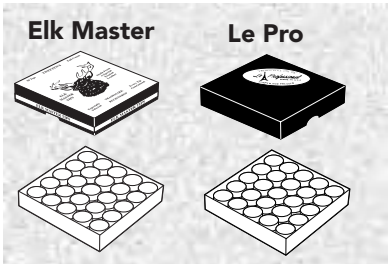

Part Number		Price per box
26-1073-11	Elk Master 11mm	17.75
26-1073-12	Elk Master 12mm	17.55
26-1073-13	Elk Master 13mm	18.85
26-1073-14	Elk Master 14mm	20.00
26-1072-11	Le Pro 11mm	20.00
26-1072-12	Le Pro 12mm	21.25
26-1072-13	Le Pro 13mm	22.40
26-1072-14	Le Pro 14mm	23.60

E.S.D. COIN CHUTE

E.S.D. VERTICAL 4™

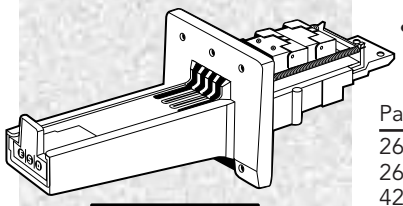

- Vertical 4 Coin acceptance
- All steel security gate with solid metal bridge
- Instant price changes 0 - $1.00 up and down pricing in seconds without disassembly
- Exclusive dual return springs allow for smoother operating
- Fits all existing extensions and machines
- Great for most pool tables and other games
- Universal mounting centers
- Durable metal casting with high polish Chrome finish
- Various factory pre-set versions to fit your needs

Part Number	Type	Coin(s) Accepted	Pre-Set At	Vend Price	Price per ea.	L/10	L/20
26-1012-00	Vertical 4	$0.25 US	2 Coins	$0.50	30.15	29.00	27.75
26-1013-00	Vertical 4	$0.25 US	3 Coins	$0.75	30.15	29.00	27.75
42-3163-00	Vertical 4	$0.25 US	4 Coins	$1.00	30.15	29.00	27.75
26-1269-00	Vertical 4	.800 Token	1 Token	1 Token	40.95	38.60	37.05
42-3165-00	Vertical 4	.882 Token	2 Tokens	2 Tokens	40.95	38.60	37.05
26-1122-00	Vertical 4	.900 Token	2 Tokens	2 Tokens	40.95	38.60	37.05

E.S.D. VERTICAL 5™

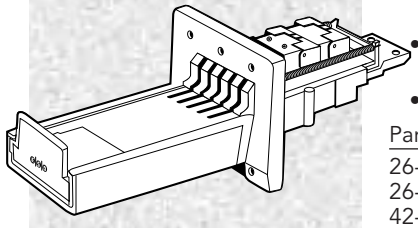

- Vertical 5 Coin acceptance
- Easily adapts to token operation
- Rugged heavy duty design
- Better vandalism protection, Second gate in bridge to eliminate taping
- Fits all Canadian and US Machines $1.00 to $4.25
- Fits all existing extensions and machines
- One step price changes up or down in seconds without disassembly
- Exclusive dual return springs allow for smoother operating
- Durable metal casting with high polish Chrome finish
- Various factory pre-set versions to fit your needs

Part Number	Type	Coin(s) Accepted	Pre-Set At	Vend Price	Price per ea.	L/10	L/20
26-1148-50	Vertical 5	$0.25 US	2 Coins	$0.50	40.95	38.95	37.05
26-1148-75	Vertical 5	$0.25 US	3 Coins	$0.75	40.95	38.95	37.05
42-3167-00	Vertical 5	$0.25 US	4 Coins	$1.00	40.95	38.95	37.05
26-1148-15	Vertical 5	$0.25 US	5 Coins	$1.25	40.95	38.95	37.05
26-1589-00	Vertical 5	$0.25 & $1.00	5 Coins	$2.00	43.75	41.55	28.65
42-3164-00	Vertical 5	.882" Token	2 Tokens	2 Tokens	45.75	43.35	41.35
42-3166-00	Vertical 5	.900" Token	2 Tokens	2 Tokens	45.75	43.35	41.35
26-1267-00	Vertical 5	.984" Token	1 Token	1 Token	45.75	43.35	41.35
26-1267-004	Vertical 5	.984" Token	4 Tokens	4 Tokens	45.75	43.35	41.35
26-1267-005	Vertical 5	.984" Token	5 Tokens	5 Tokens	45.75	43.35	41.35
26-1148-00	Vertical 5	1" Token	3 Tokens	3 Tokens	45.75	43.35	41.35

E.S.D. VERTICAL 8™

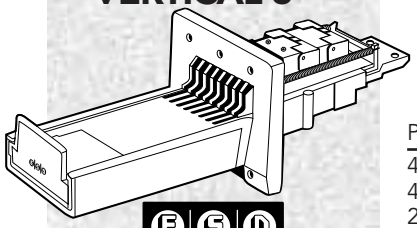

- Vertical 8 Coin acceptance
- All steel security gate and solid metal bridge
- Instant price changes, 0 - $2.00 up and down pricing
- One step price changes up or down in seconds w/o disassembly
- Rugged heavy duty design
- Fits all existing extensions and machines
- Durable metal casting with high polish Chrome finish
- Various factory pre-set versions to fit your needs

Part Number	Type	Coin(s) Accepted	Pre-Set At	Vend Price	Price per ea.	L/10	L/20
42-3187-10	Vertical 8	$0.25 US	4 Coins	$1.00	49.45	47.00	44.65
42-3187-00	Vertical 8	$0.25 US	6 Coins	$1.50	49.45	47.00	44.65
26-1145-00	Vertical 8	$0.25 US	8 Coins	$2.00	49.45	46.95	44.65

E.S.D. SPARE PARTS

Part Number	ESD Part No.	Description	Price per ea.
26-1539-00	20065	Ratchet Spring	.53
26-1540-00	20059	Ratchet	.53
20185	20185	Location Screw	.25
20662	20662	Bridge Insert Screw	.25
26-1024-00	20706	Blank Insert Gray	.71
20736	20736	Drive Screw	.25
20741	20741	Insert Screw	.25
26-1116-00	20746	Leaf Spring 4 Coin	.86
20748	20748	Bridge Insert $ 1.00	5.05
20781	20781	.030 Shim for .900 token	.25
20782	20782	Spring Bracket #4	1.70
20964	20964	Slide Return Spring vertical 4	.71
26-21887	21187	Bridge for Coin Chute	14.80
21193	21193	.25 Cent Insert	1.60
21195	21195	Token Insert for .882 token	4.85
21209	21209	Insert Retainer Plate Screw	.25
21216	21216	Blank Insert	.86
21256	21256	Retainer Plate	1.30

Part Number	ESD Part No.	Description	Price per ea.
21752	21752	Handle Only	15.50
21754	21754	Retainer Plate	1.30
21771	21771	Return Spring	1.30
21811	21811	End Insert for .984 Token	4.90
21831	21831	Bridge New Vertical 4	11.50
21868	21868	Gate Retainer	1.90
21904	21904	Bottom Plate 4 coin	1.30
21907	21907	Leaf Spring, Vertical	1.40
21913	21913	Bridge Insert $ 1.00 P4	4.90
43-0715-00	50034	Bottom Plate Screw	.25
50035	50035	Extension Screw	.25
26-1590-00	5032	Ratchet Screw V4, 5 & 8	.31
207047	207047	Pivot Pin	.38
21745-1	21745-1	Bridge Assembly	10.90
42-3168-00	4D100	Decal $ 1.00	.43
26-1058-00	4D50	Label Insert $ .50	.43
26-1057-00	4D75	Label Insert $ .75	.35
42-3159-00	5D125	Decal $ 1.25	.43
42-3158-00	5D150	Decal $ 1.50	.43

GREENWALD G-4 COIN CHUTE

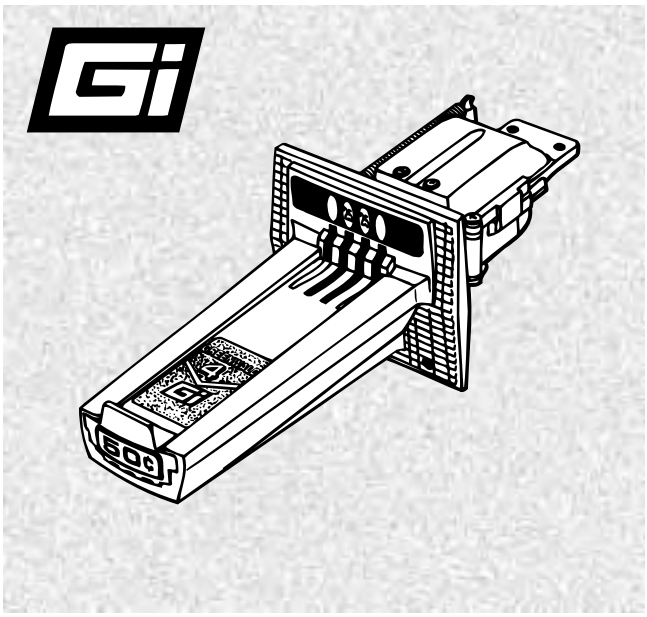

- 1/2" Front mounting plate to protect chute from direct attack, thickest front plate in the industry
- Stainless steel gate provides superior rust protection
- Hardened steel, V-Notch coin sizing block to allow for greater rejection of slugs, tile and foreign coins than ordinary design
- Stainless steel sizing dogs provide superior protection from direct slide forcing
- Hardened steel slide buffer plate works with steel dogs to give ultimate protection from the side attack
- Hardened steel ratchet dog to give ultimate protection from direct, physical attack
- Quick, easy change of prices, simply remove, don't change parts to increase vend price
- 24 ways to go from 0 to $5.00 using nickels, dimes, quarters and $1.00 Canadian
- Available in various token configurations

Part Number	Accepted	Coin(s) Pre-Set At	Vend Price	Price per ea.	L/15
TYPE: G-4					
26-1504-50	$0.25 US	2 Coins	$.50	38.60	34.95
26-1504-75	$0.25 US	3 Coins	$.75	38.75	35.65

GREENWALD VERTICAL 5 COIN CHUTE

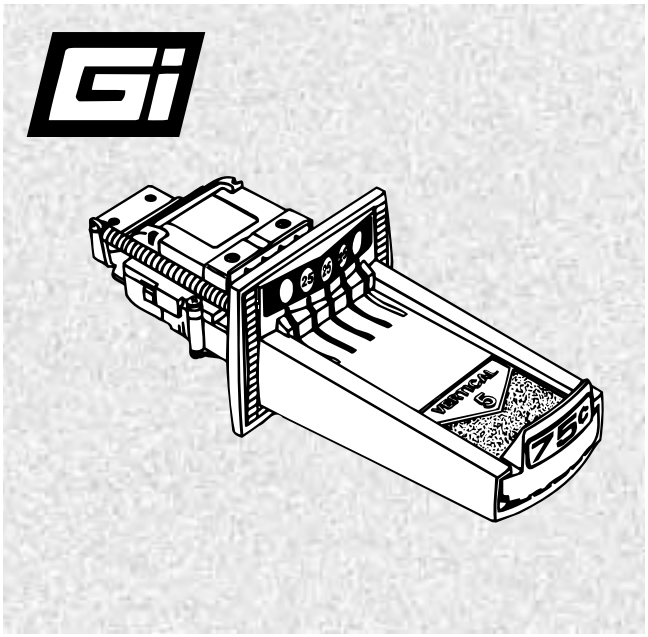

- 1/2" Front mounting plate to protect chute from direct attack, thickest front plate in the industry
- Stainless steel gate provides superior rust protection
- Hardened steel, V-Notch coin sizing block to allow for greater rejection of slugs, tile and foreign coins than ordinary design
- Stainless steel sizing dogs provide superior protection from direct slide forcing
- Hardened steel slide buffer plate works with steel dogs to give ultimate protection from the side attack
- Hardened steel ratchet dog to give ultimate protection from direct, physical attack
- Quick, easy change of prices, simply remove, don't change parts to increase vend price
- 24 ways to go from 0 to $5.00 using nickels, dimes, quarters and $1.00 Canadian
- Available in various token configurations

Part Number	Accepted	Coin(s) Pre-Set At	Vend Price	Price per ea.	L/15
TYPE: VERTICAL 5					
26-1505-75	$0.25 US	3 Coins	$.75	40.95	37.05
26-1505-100	$0.25 US	4 Coins	$1.00	40.95	37.05
26-1505-100C	$1.00 Canadian	1 Coin	$1.00	49.10	44.55

GREENWALD SPARE PARTS

Part Number		Price per ea.
27-1243-00	Blockout Key for V-5	1.65
27-1244-00	Spring for Slide Return for V-4, V-5	.96
26-1523-00	Coin Slide for V-5	29.55
27-1245-00	Buffer for V-5	6.00
43-1073-00	Buffer Screw for V-5, Metric	.43
26-1550-00	Coin Slide Stop for V-5	2.15

HASP FOR VALLEY POOL TABLE

- Heavy duty
- Designed for Valley tables
- Can be adapted to other tables
- Color: Black
- Includes hardware and instructions
- Made in the USA

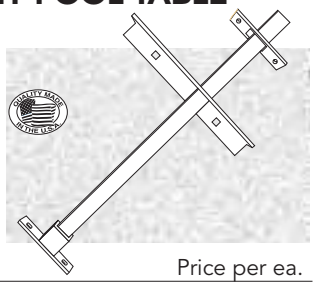

Part Number		Price per ea.
30-0028-00	Hasp for Valley Pool Tables	22.90

HASP FOR DYNAMO POOL TABLES

- Heavy duty - 3/16" x 1-1/2" wide
- Color: black
- For use on Dynamo pool tables
- Includes hardware and instructions

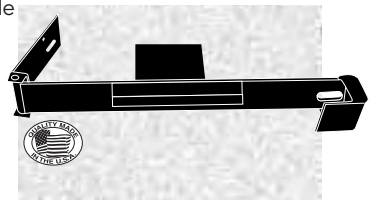

Part Number		Price per ea.
26-1158-00	Hasp for Dynamo Pool Tables	28.45

© HAPP CONTROLS

POOL TABLE MINI-MOVER

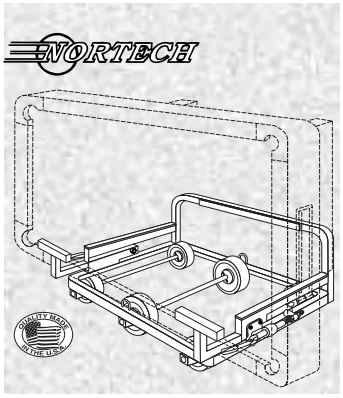

- Easily moves pool table from location to location
- Fits virtually all pool tables and air hockey tables, even those with trustle legs
- Adjusts easily for different widths and lengths
- Specially angled to balance load over wheels
- Two will fit side by side in a pickup truck
- Both the mover and pool table can fit on an extended pickup liftgate
- Strong clamps hold table securely in place
- Rated at 1000 lb. test
- Built tough in the USA
- Size: 35" x 22" x 12"; weighs 42 lbs.

Part Number	Description	Price per ea.
33-1208-00	Pool Table Mini-Mover	348.15

SLATE LIFTER KIT

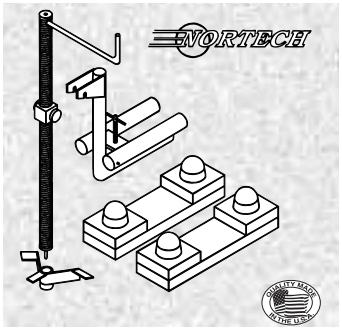

- Safely lifts and rotates the slate to come to you while recovering
- Allows 1 person to recover a pool table
- Simple, but clever, design makes this kit very easy to use
- Includes instructional video tape if further instruction is necessary

Part Number		Price per ea.
33-1059-00	Slate Lifter Kit	289.10

BILLIARD BARGE POOL TABLE TRANSPORT PROTECTOR

NEW

- Protects sides and corners from damage
- You can load, unload, climb stairs without damage to your table
- Easy to use: place protector on the back side the of table, tighten straps, stand up on dolly, ready to roll
- Durable lightweight aluminum
- Designed for use on 7 ft tables
- Barges for 8 foot tables available by special order
- Can also be used on soccer tables or hockey tables
- Handles on both ends and sides make handling, lifting, balancing, and guiding your pool table a breeze
- Approximate weight 40 lbs.
- Made in USA
- Drop shipped from factory
- 96" L x 20" W

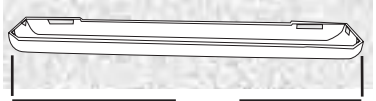

Part Number		Price per ea.
33-1275-00	Billiard Barge Pool Table Transport Protector	467.20

EASY-LIFT POOL TABLE MOVER

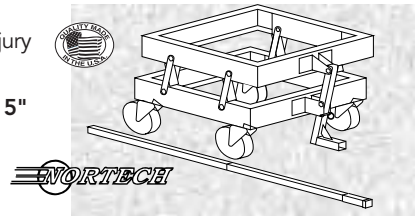

- Allows 1 person to easily move a pool table
- Reduces risk of back injury
- Lifts table 3"
- **Extremely heavy duty 5" casters**
- 56 lbs. weight allows shipping by UPS

Part Number		Price per ea.
33-1058-00	Easy-Lift Pool Table Mover	319.25

U-LIFT POOL TABLE MOVER

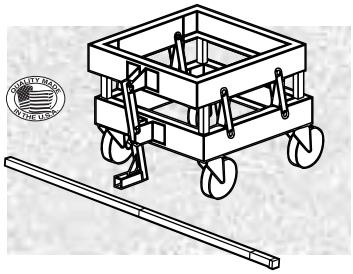

- Allows 1 person to move a pool table
- Reduces risk of back injury
- Heavy duty casters
- UPS shippable

Part Number		Price per ea.
33-1005-00	U-Lift Pool Table Mover with Handle	240.90
33-1202-00	Handle Only	48.15

EASY LEVELER

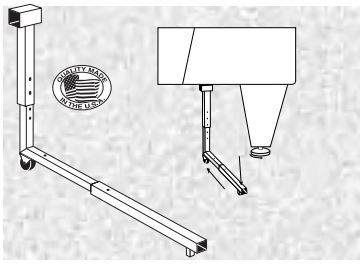

- Easily lifts a pool table or air hockey game off the floor to adjust the leg levelers
- Simply place at the end of the table and press down. Lifts 2 legs off the floor.
- Save your back and raise the table the easy way

Part Number		Price per ea.
26-1100-00	Easy Leveler	51.85

CUSHION RUBBER

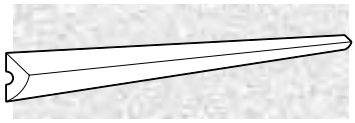

- For use on pool table rails
- Used by leading manufacturers
- Formulated with the highest grade natural rubber and compounds
- 6 rails per set

Part Number		Price per set
26-1084-00	Cushion Rubber, 42" for Valley 8 ft. Table	30.15
26-1088-00	Cushion Rubber, 36" for 7 ft. Table, "K66" Style	30.10
26-1087-00	Cushion Rubber, 42" for 8 ft. Table, "K66" Style	35.70
26-1086-00	Cushion Rubber, 47" for 9 ft. Table, "K66" Style	32.55
26-1085-00	Cushion Rubber, 42" for All Tables, "U23" Style	27.75

CUSHION RAIL SET

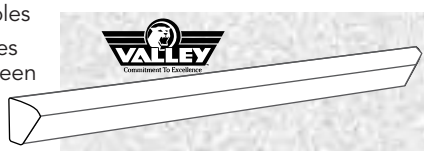

- For use on Valley tables
- Finished rails; includes rubber, wood and green cloth
- 6 rails per set

Part Number	Description	Price per set
CPDBCCRA2	85" Table Cushion Rail Set	218.45
26-1068-00	88" Table Cushion Rail Set	218.45
CPBBCCRA2	93" Table Cushion Rail Set	218.45

T-NUT

- For Rail Screws on Valley Pool Tables
- 1/4 – 20 thread
- Valley Ref. # 203-0009-0
- Minimum order 10 pieces

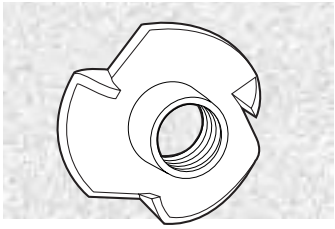

Part Number		Price per ea.
43-0486-00	T-Nut for Valley Pool Tables	.15

HINGEBAR (BALLGATE) SPRING

- For Valley Pool Tables
- Valley Ref. # 217-0012-0

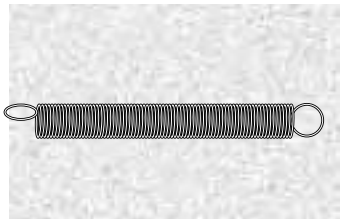

Part Number		Price per ea.
217-0012-0	Hingebar (BallGate) Spring	2.10

COIN CHUTE BRACKET

- For Valley Pool Tables
- Valley Ref. # 206-0004-0 – Short 5"
- Valley Ref. # 206-0004-3 – Long 6-1/2"

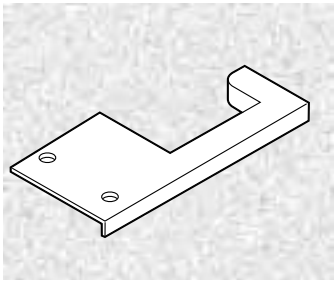

Part Number		Price per ea.
26-1092-00	Coin Chute Bracket – Short	8.10
26-1093-00	Coin Chute Bracket – Long	6.10

COUNTING METER, BY KESSLER ELLIS

- Electric, non-resettable counter
- 6 digit, counts to 999,999, then repeats
- 600 counts per minute
- With mounting bracket
- Without diode
- 10" wire leads

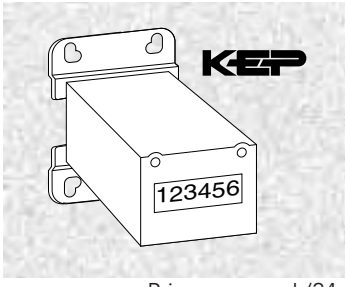

Part Number		Price per ea.	L/24
42-1168-00	Counting Meter – 4.5/6 Volt DC	5.55	5.20

POOL TABLE LEG LEVELER

- Heavy duty die cast assembly
- 4-7/8" base
- 1-3/4" Long shank
- 1/2-13 thread size
- Sold each

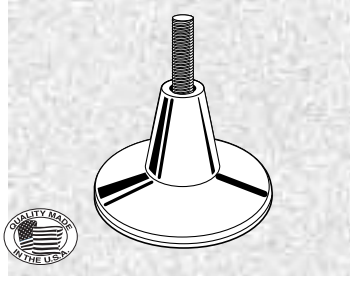

Part Number		Price per ea.	L/12
49-0997-00	Pool Table Leg Leveler	8.45	7.60

POOL TABLE COVERS

- Pool cover adds years to the life of the cloth
- Various sizes and colors available

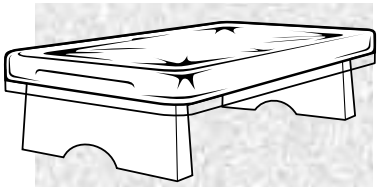

Part Number		Price per ea.
26-1061-00	Pool Table Cover, 7 ft. & 8 ft., Clear Vinyl	5.70
26-1334-00	Pool Table Cover, 9 ft., Clear Vinyl	7.30
26-1143-00	Pool Table Cover, 7 ft., 8 ft. and 9 ft. Tables, Green Vinyl	7.30
26-1552-00	Pool Table, 8 ft., Brown Vinyl	5.70
26-1848-00	Pool Table Cover, 7 ft., 8 ft. and 9 ft. Tables, Heavy Duty PVC Vinyl - Black	24.95
26-1849-00	Pool Table Cover, 7 ft., 8 ft. and 9 ft. Tables, Heavy Duty PVC Vinyl - Brown	24.95

PEA SHAKER AND PEA'S

- Pea shaker is made of tough, durable plastic for the roughest use
- Red & white deluxe pea's are the finest quality composition, with red enameled inlaid numbers
- The red standard pea's are a top grade plastic with white inlaid numbers

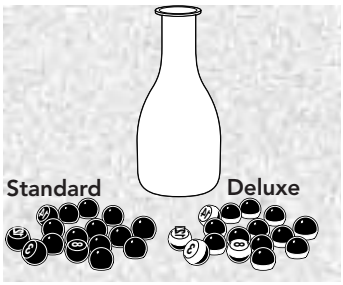

Part Number		Price per ea.
26-1060-00	Standard Pea's, Set of 16	1.15
26-1059-00	Deluxe Pea's, Set of 16	2.05
26-1062-00	Pea Shaker	.98

QUARTER COIN HOLDER

- Eliminates the question of "who's next" in the game
- Holds up to 8 coins
- Extra strong plastic includes a double-sided, pressure sensitive tape for easy mounting anywhere

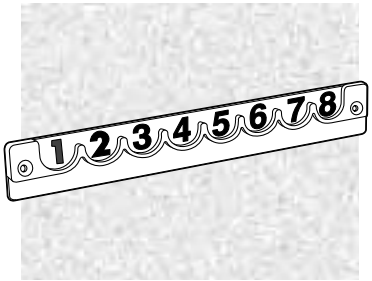

Part Number		Price per ea.	L/25
26-1065-00	Quarter Coin Holder	4.20	3.70

POOL TABLE LEG LEVELER

- Heavy-Duty die cast assembly
- Rubber molding around base to prevent floor marring
- 6" diameter base
- 2" long shank
- 1/2"-20 thread size
- 4 per set
- Includes threaded base plate

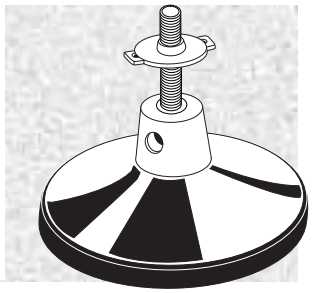

Part Number		Price per set
49-0997-01	Set of 4 Pool Table Leg Leveler	17.20
49-0997-02	Individual Pool Table Leg Leveler	5.85

© HAPP CONTROLS

SILVER CUP CUE CHALK

- Strong, hard chalk grips cue tip for more accurate shooting
- Quickly becoming the worlds favorite chalk
- Available in boxes of 12 or 144

Part Number	Box Quantity	Color	Price per box	L/60
26-1051-12B	12	Blue	2.15	1.90
26-1051-12G	12	Green	2.15	1.90
26-1051-12DG	12	Dark Green	2.15	1.90
26-1051-12BK	12	Black	2.40	2.10
26-1051-12BUR	12	Burgundy	2.40	2.10
26-1051-12PW	12	Pewter	2.40	2.10
26-1051-12PR	12	Purple	2.40	2.10
26-1051-12R	12	Red	2.40	2.10
26-1051-12TN	12	Tan	2.40	2.10
Part Number	Box Quantity	Color	Price per box	L/5
26-1051-144B	144	Blue	16.40	15.15
26-1051-144G	144	Green	16.40	15.15
26-1051-144BUR	144	Burgundy	21.75	20.10
26-1051-144R	144	Red	21.75	20.10
26-1051-144TN	144	Tan	21.75	20.10
26-1051-144BK	144	Black	21.75	20.10

NATIONAL CUE CHALK

- Top quality pool cue chalk
- Durable chalk stays on cues longer
- Available in boxes of 12 or 144

Part Number	Box Quantity	Color	Price per box	L/60
26-1010-12B	12	Blue	2.25	2.15
26-1010-12G	12	Green	2.25	2.15
Part Number	Box Quantity	Color	Price per box	L/5
26-1010-144B	144	Blue	18.85	17.55
26-1010-144G	144	Green	18.85	17.55

MASTER CUE CHALK

- Coats cue tips smoothly and evenly
- Traditionally one of the most popular chalks
- Available in boxes of 12 or 144

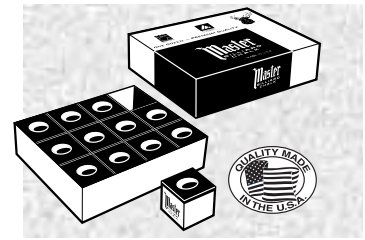

Part Number	Box Quantity	Color	Price per box	L/60
26-1023-12B	12	Blue	2.40	2.25
26-1023-12G	12	Green	2.40	2.25
26-1023-12R	12	Red	2.25	2.15
Part Number	Box Quantity	Color	Price per box	L/5
26-1023-144B	144	Blue	23.90	22.25
26-1023-144G	144	Green	23.90	22.25
26-1023-144R	144	Red	25.05	23.45

SILVER CUP CONE CHALK

- Made in U.S.A.
- Hard texture cuts down on the breakage and adds life at the site location
- Standard size to fit all mount holders
- Packed 6 per case
- Minimum order 6 pieces

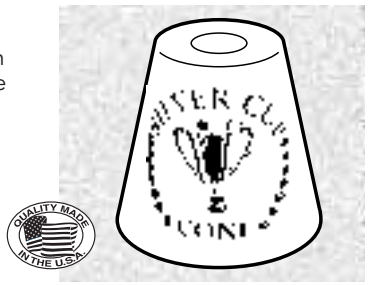

Part Number		Price per ea.	L/18
26-1000-00	Silver Cup Cone Chalk	2.15	2.05

CONE CHALK HOLDER

- Heavy duty metal withstands the toughest of locations
- Black durable paint
- Wall mount
- Made in the USA

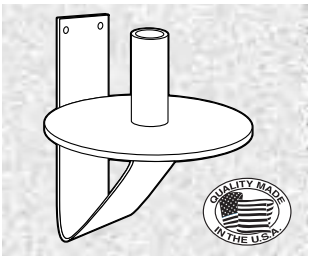

Part Number		Price per ea.
26-1048-00	Heavy Duty Cone Chalk Holder	12.10

WOOD CONE CHALK HOLDER

- Durable hardwood construction
- Walnut finish
- Wall mount

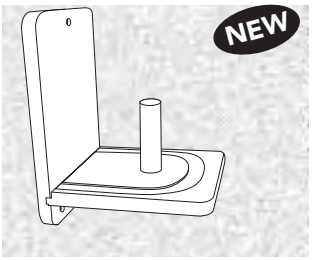

Part Number		Price per ea.
26-1401-00	Wood Cone Chalk Holder	9.65

TALCUM DISPENSER

- Mounts on wall with bracket provided
- Helps keep talcum away from the pool table, saving the cloth
- Available in both durable plastic and aluminum

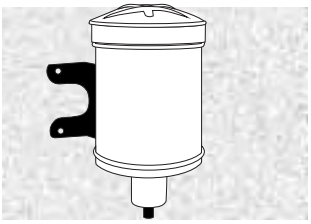

Part Number		Price per ea.	L/12
26-1132-00	Talcum Dispenser, Red Plastic	5.20	4.60
26-1133-00	Talcum Dispenser, Aluminum	6.35	5.70

SILVER CUP PREMIUM TALC POWDER

- 13 oz. Plastic shaker style container
- Economical
- Screw-on top

Part Number		Price per ea.	L/12
26-1139-00	Silver Cup Premium Talc Powder	3.15	2.50

CUE CHALK HOLDER

- Rubber holder protects chalk from being damaged
- Permanently attached string reduces losing or stealing of chalk

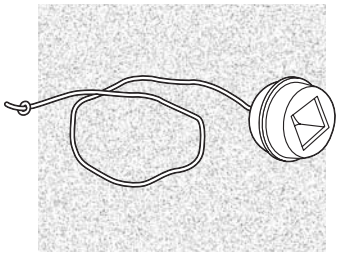

Part Number		Price per ea.
26-1063-00	Cue Chalk Holder	.79

POOL CHALK SAVER

- Prevents chalk from being lost or stolen
- Secures to pool table or wall
- To apply chalk just insert tip and rotate cue stick
- Dispenser can be accessed from either end
- Made from sturdy green plastic
- Mounting hardware included
- Sold in sets of 2

Part Number		Price per set of 2
26-1319-00	Pool Chalk Saver	8.95

SMOOTH SHOT HAND & CUE CONDITIONER

- Condition hand and cue stick for smooth strokes
- No chalky mess
- Individual packets in a plastic bag
- 12 bags per display card

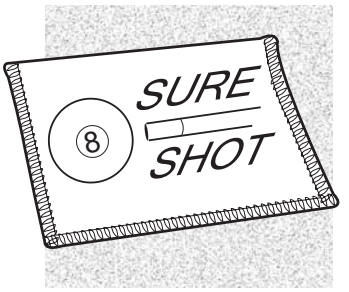

Part Number		Price per ea.
26-1351-00	Smooth Shot Hand & Cue Conditioner	2.10

FEATHERSTRIP SET

- 1/4" x 1/4" wood strips
- 6 piece set
- 9 feet long
- 12 pieces per set

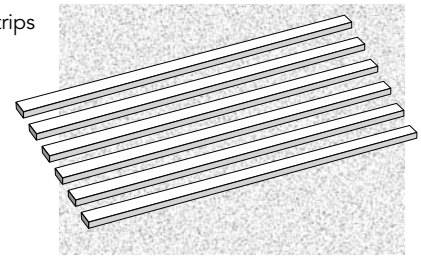

Part Number		Price per set of 12
26-1396-00	Featherstrip Set	7.25

POCKET LINERS

- Durable plastic or rubber
- Actual O.E.M. liners
- 6 per set, 4 corners & 2 sides
- For use on Dynamo, Great American and Valley tables
- 6 pieces per set

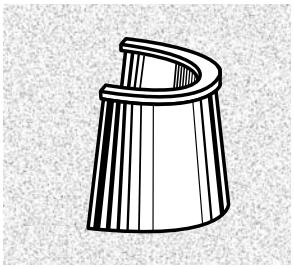

Part Number		Price per set of 6
26-1127-00	3" Plastic Pocket Liners	4.90
26-1021-00	4" Plastic Pocket Liners	4.90
26-1082-00	3" Rubber Pocket Liners	6.90

POCKET LINER PUSH-LOCK SCREWS

- New innovative black plastic screw used within pocket liners
- Will not damage balls when they are slammed into the pocket
- To install simply tap into place
- To remove simply cut plastic head off and replace in same hole
- Will work on Dynamo, Valley, and Greater American Billiards tables
- 3/4" length

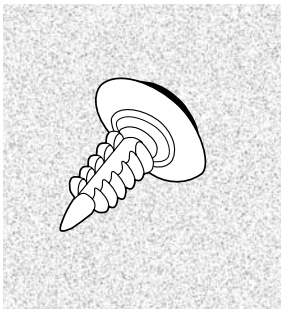

Part Number		Price per ea.	L/100
26-1258-00	Pocket Liner Push-Lock Screws	.47	.43

GULLY BOOTS

- Black durable rubber
- 6 pieces per set

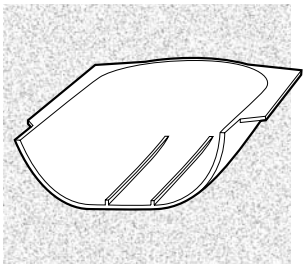

Part Number		Price per set of 6
26-1008-00	Set of Gully Boots, for Valley Pool Tables	8.55
26-1080-00	Set of Gully Boots, for Dynamo Pool Tables	13.75

CUSHION FACING

- 12 pieces per set (8 large & 4 small)
- Protects balls from becoming damaged by cushion block
- Durable lamination of rubber and cloth
- Can be trimmed to size
- Barge cement is the ideal adhesive to aid in the installation – see page 387

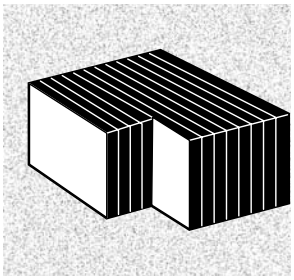

Part Number		Price per set of 12
26-1049-00	Cushion Facing Set	4.70

 © HAPP CONTROLS

"8 BALL" KEY CHAIN & CUE SCUFFER

- Cue scuffer, key chain & 8 ball all in 1
- 1-1/4" size ball

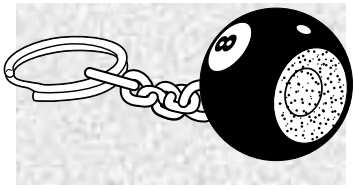

Part Number		Price per ea.
26-1130-00	"8 Ball" Key Chain & Cue Scuffer	3.75

TOURNAMENT POOL CARDS

- A must for every tournament
- Shows official Rankings
- Lists rules and regulations
- Heavy Card Stock, 11" x 14"
- 10 per pack

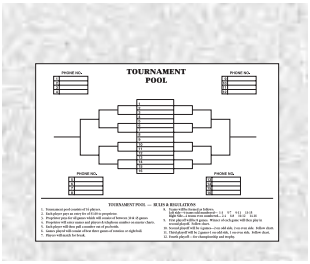

Part Number		Price per pack	L/10
26-1418-00	Tournament Pool Cards	7.80	7.25

BRIDGE HEADS

- Helps beginners to pros shoot the hard to reach shots
- Quality bridge heads are built to last
- Choice of bronze, aluminum, or plastic

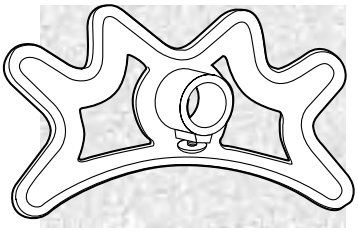

Part Number		Price per ea.	L/12
26-1009-00	Aluminum Bridge Head	1.05	.96
26-1026-00	Bronze Bridge Head	1.80	1.65
26-1320-00	Plastic Bridge Head	1.05	.96
26-1496-00	Brass Bridge Head	6.05	5.20

BLACK RUBBER BUMPER

- Protects the bottom of the cue stick
- Simply screw on bottom of cue stick
- Includes screw

Part Number		Price per ea.	L/50
26-1089-00	Black Rubber Bumper with Screw	.30	.25

DO YOU WANT TO KNOW EACH TIME YOUR ORDER SHIPS OUT?

e-mail notification and order **tracking information** is now available from Happ Controls! Contact your sales representative or e-mail our customer service department at: **info@happcontrols.com** with your account information.

REPLACEMENT PARTS FOR DYNAMO POOL TABLES

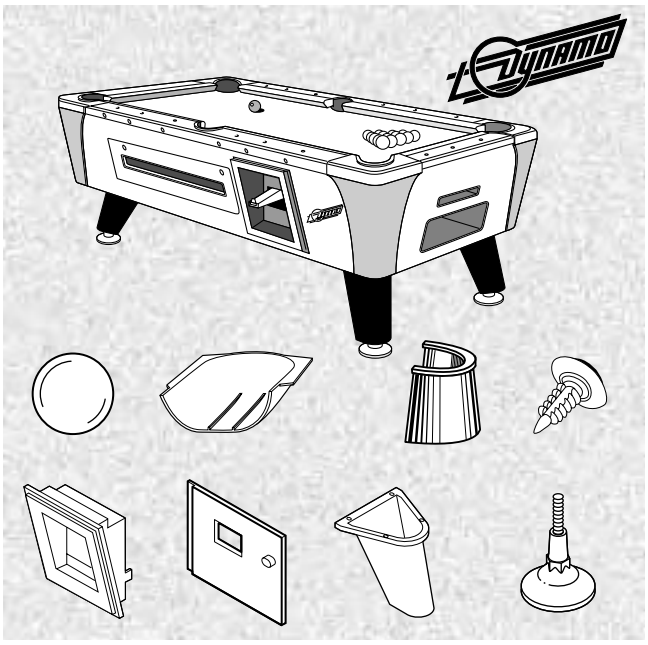

- Original Dynamo parts
- Let us keep your inventory of official Dynamo replacement parts. All in stock and ready to ship today!

Part Number	Dynamo Ref. No.	Description	Price per ea.
26-1080-00	710200700	Gulley Boots, Set of 6	13.75
26-1444-00	720202400	Brass Corner	92.65
26-1526-00	7202G1047	Trim Side Molding, Brass	22.90
26-1527-00	7202G1714	Trim End Molding, Brass	13.75
800200200	800200200	Ball Trap Assembly	60.30
800200400	800200400	Corner Casting Chrome	59.85
800200500	800200500	Extension for Coin Chute	5.85
800201100	800201100	Bracket for Tripper Arm	15.05
800204000	800204000	Trip Rod Assembly	38.80
26-1242-00	860000400	Plastic Coin Door Frame	38.20
860000600	860000600	Coin Box Enclosure	22.85
26-1466-00	860000800	Coin Box	16.80
860000810	860000810	Plastic Cashbox	30.10
26-1248-00	860001300	Plastic Leg	44.35
26-1243-00	860001900	Plastic Coin Door	21.85
8602G0300	8602G0300	Ball View Door Trim	8.40
8602G0700	8602G0700	Triangle Housing Trim Gold	3.10
870000302	870000302	Bolt Ball Flap 1/4" -20 x 3/8"	1.70
870007359	870007359	Leg Bolt MS 5/16 18 x 1-1/2 CP HX ZN	1.30
880404200	880404200	Optical Sensor Bd. for Model'95	54.65
26-1249-00	890001400	Leg Leveler	11.55
890200100	890200100	Meter with Arm	26.95
26-1157-00	890200315	Spring Ball Trip Rod	3.25
26-1258-00	890200400	Push Lock Screw f/ Corner Poc	.47
900200137	900200137	Pocket Ramp (Set 37-38) 7" Table	65.10
930200805	930200805	Plexiglass View Door	18.95
960206437	960206437	Under Rail	89.15
26-1056-00	980200200	New Green Dot Cue Ball	21.75
980201537	980201537	Rail Set 7 foot Model 37	234.90
990206137	990206137	End Rail Assembly	50.60
26-1032-10	209-0005-5	New Valley/ Dynamo Magnetic Cue Ball	25.45

REPLACEMENT PARTS FOR VALLEY POOL TABLES

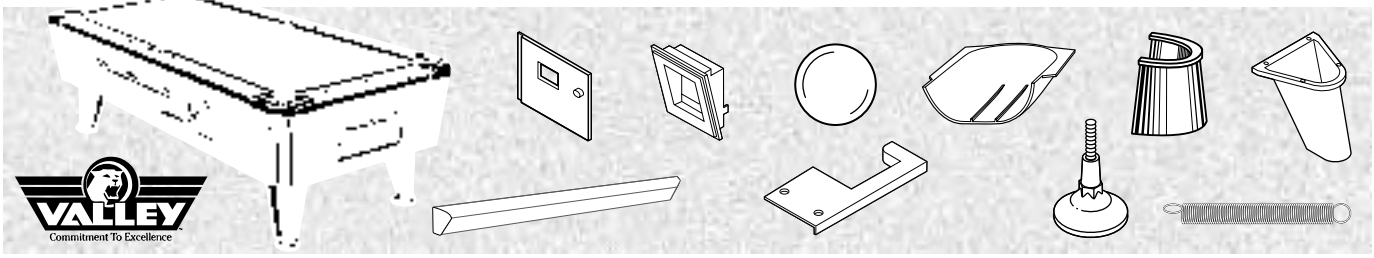

- Original Valley parts
- Let us keep your inventory of Valley replacement parts. All in stock and ready to ship today!

POOL TABLE REPLACEMENT PARTS

Part Number	Valley Part Number	Description	Price per ea.
004-0021-1	004-0021-1	Push Chute Right SIde Door	5.25
004-0022-00	004-0022-00	Door Rail Left Side	4.30
010-0066-0	010-0066-0	Hinge Wood Block B	4.35
010-0067-0	010-0067-0	Hinge Wood Block A	3.65
201-0001-0	201-0001-0	Trap Pivot Screw 1/4"- 20 x 5/16"	1.35
201-0002-0	201-0002-0	Rail Molding Screw #6 x 5/8"	1.35
202-0002-0PKG	202-0002-0	Rail Bolt 1/4"- 20 x 4-1/2"	1.35
202-0003-0	202-0003-0	Leg Bolt 5/16" - 18 x 1-1/2"	.60
202-0005-0	202-0005-0	Bolt f/ Magnet Holder Ball	1.35
202-0109-1	202-0109-1	Pocket Liner Screw 10-32 x 1/2"	1.35
203-0005-0	203-0005-0	Coin Mech. Hex Nut	.11
43-0486-00	203-0009-0	T-nut 1/4" - 20 (cushion rail bolt)	.15
203-0011-0	203-0011-0	T-nut 5/16" - 18 (leg bolt)	1.35
203-0082-0	203-0082-0	T-nut and Base for Table Leg	1.25
204-0016-0	204-0016-0	Large Pocket Liner Nail #6 x 3/4"	.53
204-0017-0	204-0017-0	Trim Molding Nail #14 x 7/8"	1.35
204-0018-0	204-0018-0	Trim Molding Screw Nail 2"x 3/4"	.43
204-0078-0	204-0078-0	Pocket Liner Washer	1.35
205-0002-0	205-0002-0	Gully Boot	2.50
205-0009-1	205-0009-1	Nylon Wheel	4.00
205-0017-1	205-0017-1	Ball Viewer Plexi 32	15.25
205-1577-0	205-1577-0	Black Leg With Plate	49.15
26-1008-01	205-0002-0	Original Gully Boots	12.90
205-0564-0	205-0564-0	101 Side Rail Molding 82-3/16"	17.70
205-0565-0	205-0565-0	101 End Rail Molding 38-3/16"	11.30
26-1259-00	206-0002-1	Push Chute Trap	40.40
206-0006-0	206-0006-0	Z-Bracket for Model #32	4.70
30-0082-00	206-0008-1	Lock Back Plate	1.55
206-0009-0	206-0009-0	Ball Separator Short	6.90
206-0010-0	206-0010-0	Ball Separator For Long Rail	13.10
206-0011-0	206-0011-0	Ball Shunt	11.75
206-0025-0	206-0025-0	Straps for Down Corners	3.00
206-0096-1	206-0096-1	Leg Adjustment Plate	2.00
206-0422-0	206-0422-0	Triangle Molding 30-9/16"	11.60
206-0031-00	206-0031-00	Ball Return Molding 46-1/8"	15.35
206-0442-0	206-0442-0	Push Chute Hsng Molding 39-3/16" (#3)	10.90
206-0032-01	206-0032-01	Ball View Door Molding 65-7/8"	20.55
206-0552-0	206-0552-0	93 Side Rail Molding 73	17.85
206-0563-0	206-0563-0	Down Corner Assy (ZD-6)	42.80
206-0756-0	206-0756-0	Leg Leveler 1/2"x13"	13.20
206-0782-0	206-0782-0	Down Corner Assy (ZD-7)	39.45
207-0001-1	207-0001-1	Side Pocket	5.25
207-0002-1	207-0002-1	Corner Pocket Liner- For Nails	5.80
207-0002-2	207-0002-2	Corner Pocket Liner- Punched	6.75
207-0003-1	207-0003-1	Pocket Liner Set 4"	33.60
207-0003-2	207-0003-2	Pocket Liner Set- Punched	33.60
207-0032-1	207-0032-1	Cue Ball Return Trim Ring Black	8.70
207-0036-2	207-0036-2	Rubber Mat Rap Shelf	13.10
26-1032-10	209-0005-5	New Valley/Dynamo Magnetic Cue Ball	25.45

Part Number	Valley Part Number	Description	Price per ea.
30-3156-C512A	212-0007-0	Key Only- C512A	1.90
212-0039-0	212-0039-0	Lock Assy Keyed Different (Coin Door)	6.30
30-1571-C512A	212-0041-0	2A Lock Assy Key Alike- C512A	4.05
212-0055-0	212-0055-0	Key Only #54	2.50
212-0056-0	212-0056-0	Lock Assy Keyed Alike #54	5.85
213-0404-0	213-0404-0	BS-B/93TR Side Lam	31.20
213-0405-0	213-0405-0	BS-B/93TR End Lam	18.65
213-0541-0	213-0541-0	BS-B/93 End Apron Lam	56.20
216-0008-0	216-0008-0	Switch (Cherry) f/Leopard motor	6.10
216-0047-0	216-0047-0	Coin Switch f/leopard	13.35
217-0001-1	217-0001-1	Ceramic Magnet	11.15
217-0002-2	217-0002-2	Ball Stop	3.10
217-0012-0	217-0012-0	Ball Gate Spring	2.10
217-0016-0	217-0016-0	Retaining Ring	1.40
217-0033-0	217-0033-0	Table Spots, Roll of 100	13.50
217-0394-0	217-0394-0	Counter Spring w/Hook	3.90
217-0567-0	217-0567-0	Push Chute Counter w/Spring Arm	32.20
217-0568-0	217-0568-0	Push Chute Counter w/Arm & Hook Spring	32.20
26-1008-00	26-1008-00	Gully Boots (Set of 6)	8.55
A19-0-00-0	A19-0-00-0	Led Display Assy	55.45
26-1068-00	CP-CZ-QC-RA2	88 Cushion Rail Set	218.45
26-1460-00	CP-B-00-CRA-2	93 Uncovered Rail Set	207.55
CPY00TRA20301	CP-Y-00-TRA-2-03-0	Corner Casting Assy (pre ZD-7)	73.05
CPYBSBVD-2-0101	CP-Y-BS-BVD-2-01-0	Ball View Door Taj Teak	89.60
CPYDEPCA00201	CP-Y-DE-PCA-0-02-0	Door Rail Left	3.15
CPYECBHG00201	CP-Y-EC-BHG-0-02-0	Push Chute Left Side Door Rail	3.40
CPBZQCRA3	CPBZQCRA3	93 Cushion Rail Set for 7" Tables	218.45
CPYECCDD10202	CP-Y-EC-CDD-1-02-02	Push Chute Door, Black 9-3/4"x 7"	24.65
42-0348-02	CP-Y-EC-LHO-3-02-0	Pool Table Coin Door w/ lock	31.20
CPO-Y-DE-PCA	CPO-Y-DE-PCA	Push Chute Housing Assy	72.20
26-1015-00	CU-B-00-SUP	Cue Sticks Supreme 15 to 18 oz	14.30
26-1014-00	CU-B-01-SUP	Cue Sticks Supreme 19 to 21 oz	14.30
CPY00PCH30201	CPYOOPCH30201	Top Brace	7.10
TTYBSCOD10101	TT-Y-BS-COD-1-01-0	Clean Out Door Taj Teak	21.85
TTYBSPCA3-03-01	TTYBSPCA3-03-01	Door Sill	6.10
TTYBSPCA-4-01-01	TTYBSPCA4-01-01	PC Housing, Right Side	24.10
WTY00TRA-20301	WTY00TRA-20301	Country Style Corner	81.95

Visit Our Web Site:
happcontrols.com
for **NEW** Product Updates!!

12 - CUE FLOOR RACK

- Attractive black wrinkle powder coat metal finish with heavy duty brushed metal supports
- Easy to assemble in minutes
- Rubber feet reduces slipping and scratching on tile floors
- Weighs 3-1/2 lbs.
- Made in USA

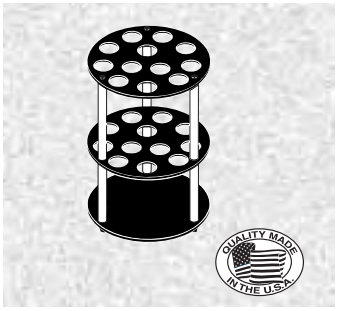

Part Number		Price per ea.	L/6
26-1105-00	12 Cue Floor Rack	41.65	36.15

17-CUE METAL FLOOR RACK

- Heavy duty - made from 1/4" steel rod
- Size: base 11-3/4" x 11-3/4", 24" high
- Color: black

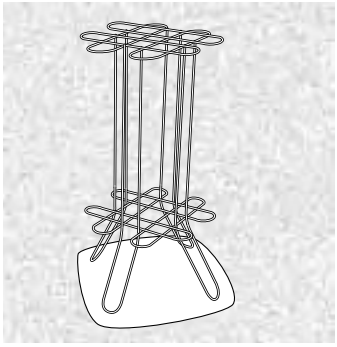

Part Number		Price per ea.
26-1977-00	17-Cue Metal Floor Rack	43.30

25-CUE FLOOR RACK

- Custom designed cue rack will hold 25 cue sticks
- Heavy duty floor rack made of heavy steel wire construction
- No assembly required
- Made in the USA

HAPP CONTROLS

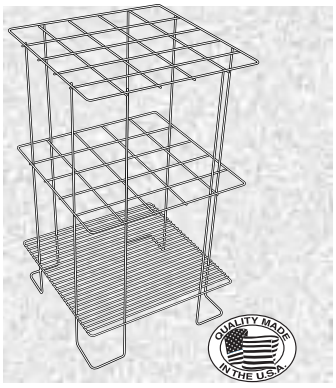

Part Number		Price per ea.	L/6
26-1108-00	25 Cue Floor Rack	70.65	70.65

MULTI-SIZE CUP & CAN HOLDER

- Made in USA
- Durable high impact polystyrene
- The only cup holder that can handle multiple beverage sizes from cans to "jumbo" cup sizes
- Convenient "mug handle" groove accepts beer mugs
- 3 pre-drilled mounting holes
- Drain hole stops excess liquid from collecting in the bottom
- Color: Black

Part Number		Price per ea.
27-1422-00	Mulit-Size Cup & Can Holder	6.30

8-CUE WOOD FLOOR RACK

- Attractive finish looks at home in any location
- Edges are finished with gold trim
- Easily assembles in minutes
- Complete with hardware and instructions
- Heavy-duty wood construction
- All holes are pre-drilled
- Shipped unassembled
- Made in USA

Part Number		Price per ea.
26-1747-00	8-Cue Wood Floor Rack- English Oak	50.95
26-1747-10	8-Cue Wood Floor Rack- Contemporary Black	50.95

HEAVY DUTY 12-CUE METAL RACK

- 18 gauge steel
- Baked on black powder coating
- Smooth rolled holes
- 24"(H) x 14"(W) x 11"(D)
- Weighs 14 lbs

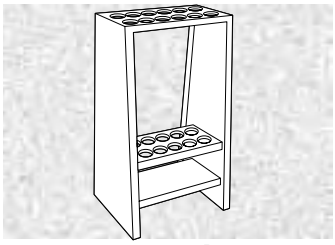

Part Number		Price per ea.
26-1461-00	Heavy Duty 12-Cue Metal Rack	57.90

CUE STICK WALL RACKS

- Solid, hardwood construction
- Includes screws for easy wall mounting
- Bottoms are drilled to support the cues, while clips firmly hold the cue shaft
- 3 sizes to choose from

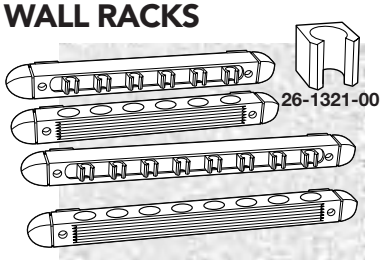

Part Number		Price per ea.	L/6
26-1054-00	6 Cue Wall Rack	7.30	6.15
26-1047-00	8 Cue Wall Rack	9.70	8.55
26-1115-00	12 Cue Wall Rack	12.10	10.95
26-1321-00	Replacement Cue Stick Clip, Black Plastic	.16	–

BEVERAGE RACKS

- Easily mounts to the side of any game or wall
- Prevents drinks from spilling on equipment, video game or pool table
- Chrome polished steel tubing
- 2 mounting brackets welded to frame enables you to securely fasten to game or wall
- Fully reinforced for extended wear

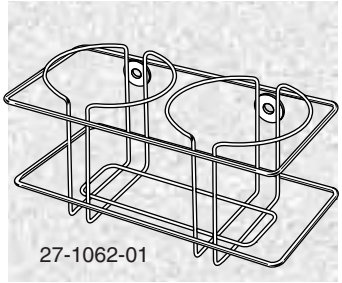

Part Number		Price per ea.
27-1062-01	2 Drink Beverage Rack	5.55
27-1062-11	3 Drink Beverage Rack	7.65

MAPLE PRO CUE STICKS

- Canadian Hard Maple shaft
- Exotic hardwood butt
- UV cured high quality lacquer finish
- 57" length with a 12.5mm leather tip
- Fiber ferrule
- Traditional four point splice styling
- Naturally weighted for optimum performance
- Assorted weights: 16 oz. thru 22 oz.
- Packed 50 per case
- Rubber cushion on end
- Happ Controls exclusive product

Part Number		Price per ea.	L/50	L/100	L/200
26-1701-00	Maple Pro Cue Stick	15.30	15.00	14.80	14.30

PREMIUM FIBERGLASS CUE STICK

- 57" 1 piece fiberglass
- Simulated 4-prong
- Natural brown wood look
- Rubber cushion on end
- High gloss finish
- Leather tip and white ferrule
- Packed 50 per case
- Assorted weights 17-21 oz.

Part Number		Price per ea.	L/50	L/100	L/200
26-1984-00	Premium Fiberglass Cue Stick	11.20	10.75	10.50	9.95

VALLEY "SUPREME" CUE STICK

- 57" length
- Leather tip
- 3/4" white fiber ferrule
- High quality hard Maple stick
- Genuine 4 prong
- Lacquer finish
- Non-marking rubber bumper to protect the base of the cue
- Naturally weighted
- Assorted weights: 15 thru 18 oz. or 19 thru 21 oz.
- Custom printing on cue stick available, please inquire

Part Number		Price per ea.	L/72	L/144
26-1014-00	Valley "Supreme" Cue Stick Heavy 19-21 oz.	14.30	13.95	13.95
26-1015-00	Valley "Supreme" Cue Stick Light 15-18 oz.	14.30	13.95	13.95

CUE STICK CARRYING CASE

- Quality 2 piece cue case in black, leather grained vinyl
- Attractive inside with red, padded lining
- Equipped with a luggage style handle and 2 latches

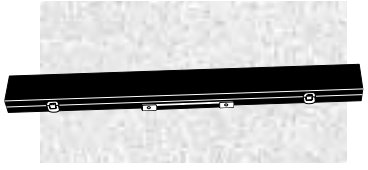

Part Number		Price per ea.	L/12
26-1260-00	Cue Stick Carrying Case	12.00	9.80

8-BALL MAPLE CUE STICK

- Genuine 4-prong
- 57" 1 piece maple wood
- 8-Ball logo imbedded in handle
- Leather Tip
- Assorted weights
- Packed 36 per case

Part Number		Price per ea.	L/36	L/72	L/144
26-1633-00	8-Ball Maple Cue Stick	7.65	6.90	6.60	6.20

THE "TAURUS" CUE STICK

- Simulated 4 prong, brown handle
- 57" 1 piece seasoned wood with high gloss finish
- Excellent balance
- Slip-on tip
- Large 2-1/2" rubber bumper protects end of stick
- Contains the following weights:
  - 5pcs 16 oz.
  - 7 pcs 17 oz.
  - 7 pcs 18 oz.
  - 10 pcs 19 oz.
  - 10 pcs 20 oz.
  - 11 pcs 21 oz.

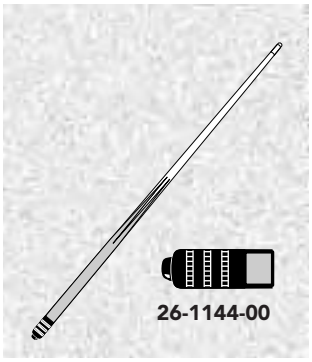

Part Number		Price per ea.	L/50	L/100	L/200
26-1007-00	The "Taurus" Cue Stick	5.15	4.75	4.45	4.45
26-1144-00	Replacement Rubber Bumper for Taurus Cue Stick	.61	—	—	—

THE "PANTHER" CUE STICK

- Genuine 4 prong
- Naturally weighted
- 57" 1 piece seasoned wood
- Slip on tip
- Great quality economy cue
- Assorted weights 16–20 oz.

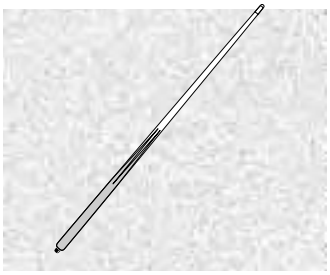

Part Number		Price per ea.	L/50	L/100	L/200
26-1064-00	The "Panther" Cue Stick	7.75	6.60	6.00	5.40

THE "DOLPHIN" CUE STICK

- Genuine 4 prong
- Naturally weighted
- 57" 1 piece seasoned wood
- 13mm black ferrule
- Great quality economy cue
- Assorted weights 16-21 oz.
- Packed 50 per case

Part Number		Price per ea.	L/50	L/100	L/200
26-1316-00	The "Dolphin" Cue Stick	11.20	10.15	8.95	8.70

© HAPP CONTROLS

HAPP CONTROLS
106 Garlisch Drive • Elk Grove, IL 60007
www.happcontrols.com
Toll Free Phone: 888-BUY-HAPP (289-4277)
Toll Free Fax: 800-593-HAPP (4277)
Phone: 847-593-6130 Fax: 847-593-6137

ORDER FORM

MINIMUM ORDER $25.00

WHOLESALE ELECTRONICS
Division of Happ Controls

OFFICE USE ONLY: **SOURCE CODE:** _____ **REP NO.** _____ ☐ **P.P.** ☐ **COL.** **MISC.** _____
ORDER NUMBER _____ S.D. _____ I.H.D. _____

BILL TO: _____ DATE: _____

_____ _____
YOUR P.O. NO.

SHIP TO: _____ Terms: _____
F.O.B. Shipping Point

SALES TAX NUMBER
Include copy of Tax Certificate

HAPP CUSTOMER NUMBER ☐☐☐☐☐☐ Phone No. (___) _____ FAX No. (___) _____

SHIP VIA: **U.P.S.** ☐ RED ☐ BLUE OTHER: _____ ☐ GROUND ☐ 3-Day Select TRUCK: _____

For Explanation - See Below
CA ☐ Ship or Cancel
HO ☐ Hold and Ship Complete
OK ☐ OK to Backorder
BC ☐ OK to Backorder, but ship complete

LINE	QUANTITY	PART NUMBER	DESCRIPTION	UNIT PRICE	AMOUNT
1					
2					
3					
4					
5					
6					
7					
8					
9					
10					
11					
12					
13					
14					
15					
16					
17					
18					
19					
20					

MEMO:

Sub-Total		
State Sales Tax where applicable*		
Shipping Charges		
TOTAL		

NOTE: $25.00 minimum order. All orders are subject to Corporate Office approval. Return of goods must be authorized. Prices are subject to change without prior notice. *Tax applicable in AZ, CA, DE, FL, GA, IL, IN, KS, KY, LA, MI, MN, MS, NJ, NM, NV, NY, OK, PA, SC, TN, TX, VA, WA, WI. Credit cards only. No debit cards will be accepted.

☐ VISA ☐ MasterCard ☐ American Express Cards Exp. Date ☐☐ ☐☐ Security Code ☐☐☐

☐☐☐☐ ☐☐☐☐ ☐☐☐☐ ☐☐☐☐

SHIP OR CANCEL - Ship what we have, cancel the remainder.
HOLD AND SHIP COMPLETE - Hold the order until it can be shipped complete.
NO INSTRUCTIONS, BACKORDER or OK TO BACKORDER - Ship what we have, backorder the remainder.

THANK YOU FOR YOUR ORDER.

X
CARD HOLDER SIGNATURE / ORDER AUTHORIZED BY

If you do not have an account with HAPP CONTROLS, please request a Credit Application. Credit card orders must have cardholders signature. Thank you for your cooperation!

© HAPP CONTROLS

HAPP CONTROLS

106 Garlisch Drive • Elk Grove, IL 60007
www.happcontrols.com

Toll Free Phone: 888-BUY-HAPP (289-4277)
Toll Free Fax: 800-593-HAPP (4277)
Phone: 847-593-6130 Fax: 847-593-6137

ORDER FORM

MINIMUM ORDER $25.00

WHOLESALE ELECTRONICS
Division of Happ Controls

OFFICE USE ONLY: **SOURCE CODE:** _____ **REP NO.** _____ ☐ **P.P.** ☐ **COL.** **MISC.** _____
ORDER NUMBER _____ S.D. _____ I.H.D. _____

BILL TO: _____ DATE: _____

_____ _____
YOUR P.O. NO.

SHIP TO: _____ Terms: _____
F.O.B. Shipping Point

SALES TAX NUMBER
Include copy of Tax Certificate

HAPP CUSTOMER NUMBER ☐☐☐☐☐☐ Phone No. ( ) _____ FAX No. ( ) _____

SHIP VIA: **U.P.S.** ☐ RED ☐ BLUE OTHER: _____ ☐ GROUND ☐ 3-Day Select TRUCK: _____

For Explanation - See Below
CA ☐ Ship or Cancel
HO ☐ Hold and Ship Complete
OK ☐ OK to Backorder
BC ☐ OK to Backorder, but ship complete

LINE	QUANTITY	PART NUMBER	DESCRIPTION	UNIT PRICE	AMOUNT
1					
2					
3					
4					
5					
6					
7					
8					
9					
10					
11					
12					
13					
14					
15					
16					
17					
18					
19					
20					

MEMO:

Sub-Total		
State Sales Tax where applicable*		
Shipping Charges		
TOTAL		

NOTE: $25.00 minimum order. All orders are subject to Corporate Office approval. Return of goods must be authorized. Prices are subject to change without prior notice. *Tax applicable in AZ, CA, DE, FL, GA, IL, IN, KS, KY, LA, MI, MN, MS, NJ, NM, NV, NY, OK, PA, SC, TN, TX, VA, WA, WI. Credit cards only. No debit cards will be accepted.

☐ VISA ☐ MasterCard ☐ American Express Cards Exp. Date ☐☐ ☐☐ Security Code ☐☐☐

☐☐☐☐ ☐☐☐☐ ☐☐☐☐ ☐☐☐☐ X _____

CARD HOLDER SIGNATURE / ORDER AUTHORIZED BY

THANK YOU FOR YOUR ORDER.

SHIP OR CANCEL - Ship what we have, cancel the remainder.
HOLD AND SHIP COMPLETE - Hold the order until it can be shipped complete.
NO INSTRUCTIONS, BACKORDER or OK TO BACKORDER - Ship what we have, backorder the remainder.

If you do not have an account with HAPP CONTROLS, please request a Credit Application. Credit card orders must have cardholders signature. Thank you for your cooperation!

Call 888-BUY-HAPP To Order

© HAPP CONTROLS

HAPP CONTROLS

106 GARLISCH DRIVE • ELK GROVE, IL 60007 • PHONE: 847-593-6130 • CREDIT DEPT. FAX: 847-952-5931

If you do not have an account with HAPP CONTROLS and a NET 30 OPEN ACCOUNT is desired, complete this credit application and submit for our processing along with your order. Or fax directly to our Credit Department at 847-952-5931.

REQUEST FOR NET 30 OPEN ACCOUNT

DATE:_____

☐ NEW CUSTOMER ☐ PRESENT CUSTOMER CUSTOMER NO. _____

Tax Exempt? ☐ YES ☐ NO SALES EXEMPTION CERTIFICATE _____

(Please fax or send a copy of your Tax Certificate for our files)

BILL TO (Attention)

NAME: _____

_____

_____

_____

PHONE: ( ) _____
Area

FAX: ( ) _____
Area

SHIP TO (Attention)

NAME: _____

_____

_____

_____

Contact Person(s): _____

_____

E-MAIL ADDRESS _____

F.E.I.N. or SOCIAL SECURITY NO. _____

BANK NAME: _____

ADDRESS: _____ CITY _____ STATE _____ ZIP _____
(Exact address or closest intersecting street)

NAME OF BANK OFFICER TO CONTACT: _____ PHONE: ( ) _____
Area

CUSTOMER PERMISSION FOR BANK TO GIVE REFERENCES TO HAPP CONTROLS:

SIGNED: _____

TITLE: _____

BANK FAX NO.: _____

BUSINESS CHECKING ACCOUNT NUMBER _____

HOW LONG IN BUISNESS? _____

NUMBER OF EMPLOYEES _____

☐ CORPORATION ☐ PARTNERSHIP ☐ PROPRIETORSHIP ☐ OTHER, EXPLAIN _____

NAME OF OFFICER, PARTNER, OR OWNER: _____ D&B _____

TRADE REFERENCES (U.S. ONLY)

COMPANY NAME: _____ ADDRESS: _____
(INCLUDE CITY & STATE)

ACC NO. _____ FAX: _____ PHONE: _____

COMPANY NAME: _____ ADDRESS: _____
(INCLUDE CITY & STATE)

ACC NO. _____ FAX: _____ PHONE: _____

COMPANY NAME: _____ ADDRESS: _____
(INCLUDE CITY & STATE)

ACC NO. _____ FAX: _____ PHONE: _____

COMPANY NAME: _____ ADDRESS: _____
(INCLUDE CITY & STATE)

ACC NO. _____ FAX: _____ PHONE: _____

YOUR NAME (Please Print) _____

YOUR SIGNATURE _____ TITLE: _____ DATE _____

Please allow 2 weeks for processing of Credit Application.

APPROVED NET 30 YES ☐ NO ☐ OFFICE USE ONLY

DATE: _____ CREDIT MANAGER: _____

© HAPP CONTROLS

NORTH AMERICAN SALES

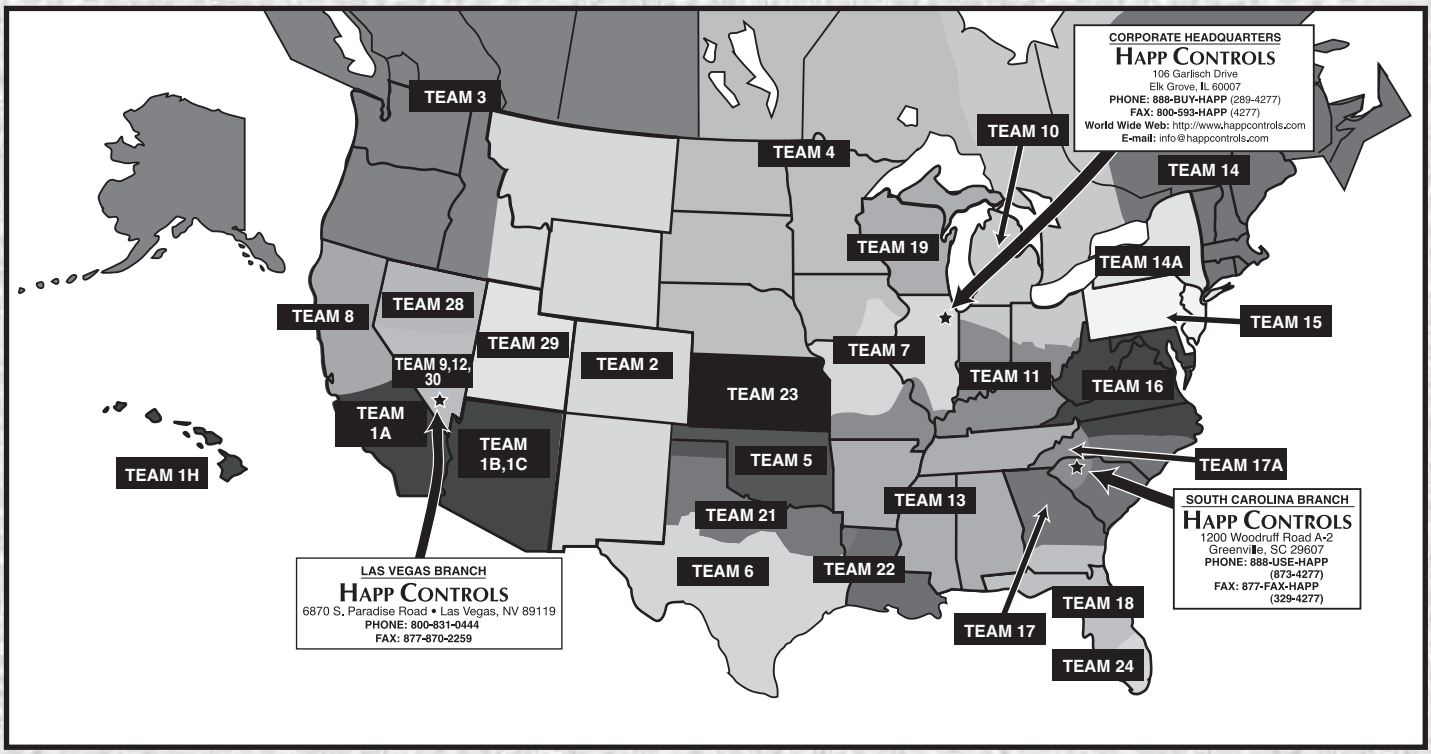

HAPP CONTROLS SALES DEPARTMENT

EXPERIENCE - THE DIFFERENCE!!

Happ Controls talented sales staff brings you over 450 years of combined experience

The outside sales force, combined with the inside sales force, establishes Happ Controls as the most experienced sales staff within the Coin-Operated parts industry.

These industry veterans are proudly representing Happ Controls product lines for the Amusement, Vending, Gaming, and Industrial industries.

At Happ Controls, we have assembled special sales teams to take care of your parts needs. Each team contains both an outside sales representative plus an inside sales representative. Together this team offers you many years of industry experience and will assist you in providing the best products to aid in the effective operation of your company.

Use the map on the next page to determine which experienced sales team covers your area. Then use the following pages to reference the many convenient ways for you to contact them; via phone, fax, e-mail or voice mail. For OEM, Industrial or Export sales staff please see page ###. For Wholesale Electronics Sales Staff, please see page ###.

© HAPP CONTROLS

NORTH AMERICAN SALES

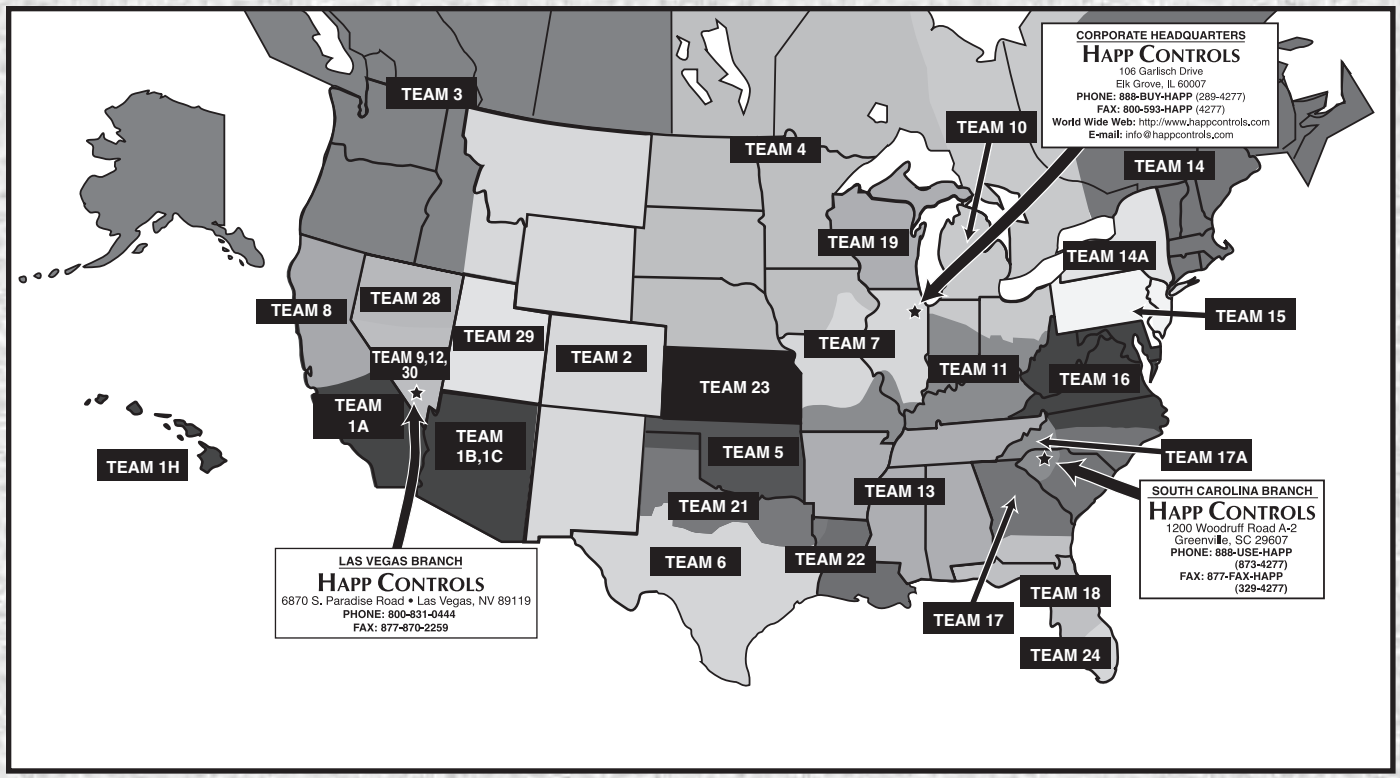

Kathleen O'Brien

Western Regional Sales Manager
Kathleen O'Brien
Tel: 800-511-1796, Ext. 340
Cell: 1-800-616-0621
Fax: 760-772-0726
Office: 760-772-4095
e-mail: kathleen.obrien@happcontrols.com

Laura Sadowski

Midwest Regional Sales Manager
Laura Sadowski
Tel: 800-511-1796, Ext. 163
Fax: 800-593-HAPP(4277)
e-mail: laura.sadowski@happcontrols.com

Bob Redwitz

Southern Regional Sales Manager
Bob Redwitz
Tel: 864-458-8704
Fax: 864-286-9971
e-mail: bob.redwitz@happcontrols.com

Joe Gumeny

Eastern Regional Sales Manager
Joe Gumeny
Tel: 800-511-1796
Cell: 770-855-8409
Fax: 770-739-6179
Office: 770-819-9820
e-mail: joe.gumeny@happcontrols.com

Haro • Walters • Kotas • Ostrega • Gorski • Anderson — TEAM 1, 12A

Outside Sales Rep.
(T1A Amus. & Vend, T1H)
Julianne Haro
Tel: 800-511-1796, Ext. 233
Cell: 909-453-9374
Fax: 909-466-4774
e-mail: julianne.haro@happcontrols.com

Inside Sales Rep.
(T1H & T1B Amus. & Vend.)
Art Kotas
Tel: 800-511-1796, Ext. 186
Fax: 800-593-HAPP(4277)
e-mail: art.kotas@happcontrols.com

Inside Sales Rep.
(T1C Gaming)
Cindy Ostrega
Tel: 800-511-1796, Ext. 187
Fax: 800-593-HAPP(4277)
e-mail: cindy.ostrega@happcontrols.com

Outside Sales Representative
Ray Walters (T12A only)
Tel: 800-831-0444
Fax: 702-891-9117
e-mail: ray.walters@happcontrols.com

Outside Sales Representative
Bruce Anderson (T1B,T1C Arizona)
Cell: 847-770-2823
Fax: 480-443-1011
Office: 480-368-7190
e-mail: bruce.anderson@happcontrols.com

Inside Sales Representative
Lin Gorski (T1A & T12A)
Tel: 800-511-1796, Ext. 102
Fax: 800-593-HAPP(4277)
e-mail: lin.gorski@happcontrols.com

Segedie • Ostrega — TEAM 2

Outside Sales Representative
Wayne Segedie
Tel: 800-511-1796, Ext. 240
Office: 303-663-8210
Cell: 847-867-0621
Fax: 303-663-0815
e-mail: wayne.segedie@happcontrols.com

Inside Sales Representative
Cindy Ostrega
Tel: 800-511-1796, Ext. 187
Fax: 800-593-HAPP(4277)
e-mail: cindy.ostrega@happcontrols.com

Barton • Pitt — TEAM 3

Outside Sales Representative
Chris Barton
Tel: 360-636-6688
Cell: 702-591-9390
Fax: 360-636-6083
e-mail: chris.barton@happcontrols.com

Inside Sales Representative
Judy Pitt
Tel: 800-511-1796, Ext. 157
Fax: 800-593-HAPP(4277)
e-mail: judy.pitt@happcontrols.com

Shequen • Ostrega — TEAM 4

Outside Sales Representative
Don Shequen
Tel: 800-511-1796, Ext. 410
Office: 320-593-1893
Cell: 847-910-6517
Fax: 320-693-7003
e-mail: don.shequen@happcontrols.com

Inside Sales Representative
Cindy Ostrega
Tel: 800-511-1796, Ext. 187
Fax: 800-593-HAPP(4277)
e-mail: cindy.ostrega@happcontrols.com

***NOTE: All reps. cover all industries unless otherwise specified**

Wasilewski • Goranson — TEAM 5

Outside Sales Representative
Bob Wasilewski
Tel: 800-511-1796, Ext. 260
Cell: 866-268-9474
Fax: 214-975-2845
e-mail: bob.wasilewski@happcontrols.com

Inside Sales Representative
Wayne Goranson
Tel: 800-511-1796, Ext. 112
Fax: 800-593-HAPP(4277)
e-mail: wayne.goranson@happcontrols.com

Murray • Trivits — TEAM 7

Outside Sales Representative
Mike Murray
Tel: 800-511-1796, Ext. 290
Cell: 847-867-0613
Fax: 708-562-9629
e-mail: mike.murray@happcontrols.com

Inside Sales Representative
Dan Trivits
Tel: 800-511-1796, Ext. 103
Fax: 800-593-HAPP(4277)
e-mail: dan.trivits@happcontrols.com

O'Tool • Smart • Walters • O'Hara — TEAM 9, 12, 30

Outside Sales Representative
Denny O'Tool
Tel: 800-831-0444
Fax: 702-891-9117
e-mail: denny.otool@happcontrols.com

Inside Sales Representative
Carrie Smart
Tel: 800-831-0444
Fax: 702-891-9117
e-mail: carrie.smart@happcontrols.com

Outside Sales Representative
Ray Walters
Tel: 800-831-0444
Fax: 702-891-9117
e-mail: ray.walters@happcontrols.com

Inside Sales Representative
Ann O'Hara
Tel: 800-831-0444
Fax: 702-891-9117
e-mail: ann.ohara@happcontrols.com

Butler • Goranson — TEAM 13

Outside Sales Representative
Steve Butler
Tel: 800-511-1796, Ext. 300
Cell: 847-867-0611
Fax: 877-553-6515
e-mail: steve.butler@happcontrols.com

Inside Sales Representative
Wayne Goranson
Tel: 800-511-1796, Ext. 112
Fax: 800-593-HAPP(4277)
e-mail: wayne.goranson@happcontrols.com

Welch • Wojahn — TEAM 6

Outside Sales Representative
Allan Welch
Tel: 800-511-1796, Ext. 390
Office: 830-537-3865
Cell: 800-366-4899
Fax: 830-537-3864
e-mail: allan.welch@happcontrols.com

Inside Sales Representative
Michelle Wojahn
Tel: 800-511-1796, Ext. 162
Fax: 800-593-HAPP(4277)
e-mail: michelle.wojahn@happcontrols.com

Coughlin • Pitt — TEAM 8 & 28

Outside Sales Representative
Mike Coughlin
Tel: 800-511-1796, Ext. 200
Cell: 707-367-1025
Fax: 707-456-1042
e-mail: mike.coughlin@happcontrols.com

Inside Sales Representative
Judy Pitt
Tel: 800-511-1796, Ext. 157
Fax: 800-593-HAPP(4277)
e-mail: judy.pitt@happcontrols.com

Younce • Rossetti — TEAM 10

Outside Sales Representative
Chris Younce
Tel: 800-511-1796, Ext. 400
Office: 888-566-5814
Cell: 847-867-0626
Fax: 586-247-2880
e-mail: chris.younce@happcontrols.com

Inside Sales Representative
Chris Rossetti
Tel: 800-511-1796, Ext. 142
Fax: 800-593-HAPP(4277)
e-mail: chris.rossetti@happcontrols.com

Kenney • Malinski — TEAM 11

Outside Sales Representative
Elsie Kenney
Tel: 800-511-1796, Ext. 270
Office: 877-273-7001
Cell: 847-867-0623
Fax: 502-448-1647
e-mail: elsie.kenney@happcontrols.com

Inside Sales Representative
Sylvia Malinski
Tel: 800-511-1796, Ext. 143
Fax: 800-593-HAPP(4277)
e-mail: sylvia.malinski@happcontrols.com

Gumeny • Rossetti — TEAM 14 & 14A

Outside Sales Representative (T14 Only)
Paul Gumeny
Cell: 908-720-8166
Phone: 732-297-6896
Fax: 732-821-1762
e-mail: paul.gumeny@happcontrols.com

Inside Sales Representative (T14 & T14A)
Chris Rossetti
Tel: 800-511-1796, Ext. 142
Fax: 800-593-HAPP(4277)
e-mail: chris.rossetti@happcontrols.com

Anderson • Malinski — TEAM 15

Outside Sales Representative
Ted Anderson
Tel: 800-511-1796, Ext. 280
Office: 610-449-6770
Cell: 847-867-0612
Fax: 610-449-6771
e-mail: ted.anderson@happcontrols.com

Inside Sales Representative
Sylvia Malinski
Tel: 800-511-1796, Ext. 143
Fax: 800-593-HAPP(4277)
e-mail: sylvia.malinski@happcontrols.com

Redwitz • Gumeny • Petersen — TEAM 17, 17A

Southern Regional (T17A Only) Sales Manager
Bob Redwitz
Tel: 864-458-8704 • Fax: 864-286-9971
e-mail: bob.redwitz@happcontrols.com

Eastern Regional Sales Manager (T17 Only)
Joe Gumeny
Tel: 800-511-1796 • Cell: 770-855-8409
Fax: 770-739-6179
Office: 770-739-2460
e-mail: joe.gumeny@happcontrols.com

Inside Sales Representative (T17 & T17A)
Toni Petersen
Tel: 800-511-1796, Ext. 177
Fax: 800-593-HAPP(4277)
e-mail: toni.petersen@happcontrols.com

Skowlund • Trivits — TEAM 19

Outside Sales Representative
Eric Skowlund
Tel: 800-511-1796, Ext. 470
Office: 262-677-9125
Cell: 847-867-0628
Fax: 262-677-4372
e-mail: eric.skowlund@happcontrols.com

Inside Sales Representative
Dan Trivits
Tel: 800-511-1796, Ext. 103
Fax: 800-593-HAPP(4277)
e-mail: dan.trivits@happcontrols.com

Butler • Kotas — TEAM 22

Outside Sales Representative
Steve Butler
Tel: 800-511-1796, Ext. 300
Cell: 847-867-0611
Fax: 877-553-6515
e-mail: steve.butler@happcontrols.com

Inside Sales Representative
Art Kotas
Tel: 800-511-1796, Ext. 186
Fax: 800-593-HAPP(4277)
e-mail: art.kotas@happcontrols.com

Riolo • Wojahn • Briseno — TEAM 24, 25

Outside Sales Representative (T24 & 25)
Jim Riolo
Tel: 800-511-1796, Ext. 330
Cell: 847-909-3825
Fax: 561-734-9495
e-mail: jim.riolo@happcontrols.com

Inside Sales Representative (T24 only)
Michelle Wojahn
Tel: 800-511-1796, Ext. 162
Fax: 800-593-HAPP(4277)
e-mail: michelle.wojahn@happcontrols.com

Inside Sales Representative (T25 only)
Mayra Briseno
Tel: 800-511-1796, Ext. 502
Fax: 800-593-HAPP(4277)
e-mail: mayra.briseno@happcontrols.com

Hamm • Petersen — TEAM 16

Outside Sales Representative
Keith Hamm
Tel: 800-511-1796, Ext. 360
Office: 804-266-6916
Cell: 847-867-0614
Fax: 804-266-1124
e-mail: keith.hamm@happcontrols.com

Inside Sales Representative
Toni Petersen
Tel: 800-511-1796, Ext. 177
Fax: 800-593-HAPP(4277)
e-mail: toni.petersen@happcontrols.com

Boyd • Wojahn — TEAM 18

Outside Sales Representative
Ed Boyd
Tel: 800-511-1796, Ext. 380
Cell: 847-867-0615
Fax: 863-965-8841
e-mail: ed.boyd@happcontrols.com

Inside Sales Representative
Michelle Wojahn
Tel: 800-511-1796, Ext. 162
Fax: 800-593-HAPP(4277)
e-mail: michelle.wojahn@happcontrols.com

Wasilewski • Kotas — TEAM 21

Outside Sales Representative
Bob Wasilewski
Tel: 800-511-1796, Ext. 260
Cell: 866-268-9474
Fax: 214-975-2845
e-mail: bob.wasilewski@happcontrols.com

Inside Sales Representative
Art Kotas
Tel: 800-511-1796, Ext. 186
Fax: 800-593-HAPP(4277)
e-mail: art.kotas@happcontrols.com

Wasilewski • Goranson — TEAM 23

Outside Sales Representative
Bob Wasilewski
Tel: 800-511-1796, Ext. 260
Cell: 866-268-9474
Fax: 214-975-2845
e-mail: bob.wasilewski@happcontrols.com

Inside Sales Representative
Wayne Goranson
Tel: 800-511-1796, Ext. 112
Fax: 800-593-HAPP(4277)
e-mail: wayne.goranson@happcontrols.com

Mayra Briseno — TEAM TM

Inside Sales Representative - Mexico
Mayra Briseno
Tel: 800-511-1796, Ext. 502
Fax: 800-593-HAPP(4277)
e-mail: mayra.briseno@happcontrols.com

HAPP CONTROLS SALES DEPARTMENT

EXPERIENCE - THE DIFFERENCE!!

Happ Controls talented sales staff brings you over 450 years of combined experience

OEM SALES AND INDUSTRIAL SALES

Ralph Orlowski

Sales Manager
Ralph Orlowski
Tel: 800-511-1796, Ext. 128
Cell: 847-867-6617
Fax: 847-952-3290
e-mail: ralph.orlowski@happcontrols.com

James Perales

OEM / Industrial Sales Representative
James Perales
Tel: 800-511-1796, Ext. 141
Cell: 847-867-0616
Fax: 847-952-3290
e-mail: james.perales@happcontrols.com

Mike Happ

OEM Sales Representative
Mike Happ
Tel: 800-511-1796, Ext. 140
Cell: 847-867-1835
Fax: 847-952-3290
e-mail: mike.happ@happcontrols.com

Ed Urich

OEM Sales Representative
Ed Urich
Tel: 800-511-1796, Ext. 370
Cell: 707-972-2406
Fax: 707-468-9777
e-mail: ed.urich@happcontrols.com

Jay Pollitt

Sale Manager-Display Products
Jay Pollitt
Tel: 800-511-1796, Ext. 147
Cell: 847-830-5658
Fax: 847-952-3290
e-mail: jay.pollitt@happcontrols.com

Lisa Mariscal

OEM Sales Support
Lisa Mariscal
Tel: 800-511-1796, Ext 590
Fax: 847-952-3290
e-mail: lisa.mariscal@happcontrols.com

Jackie Galbraith

OEM Sales Support
Jackie Galbraith
Tel: 800-511-1796, Ext. 545
Fax: 847-952-3290
e-mail: jacquelyn.galbraith@happcontrols.com

Robin Bawoll

OEM Sales Support
Robin Bawoll
Tel: 800-511-1796, Ext. 568
Fax: 847-952-3290
e-mail: robin.bawoll@happcontrols.com

Jim Belt

Sales Account Manager
Jim Belt
Tel: 800-511-1796, Ext. 134
Cell: 630-212-0871
Fax: 847-952-3290
e-mail: jim.belt@happcontrols.com

EXPORT SALES

Mayra Briseno

Inside Sales Representative
(Central &South America)
Tel: 847-593-6130, Ext. 502
Fax: 847-593-6137
e-mail:
mayra.briseno@happcontrols.com

Jennifer Wright

Inside Sales Representative
(APAC - Asia, Pacific)
Tel: 847-593-6130, Ext. 133
Fax: 847-593-6137
e-mail:
jennifer.wright@happcontrols.com

Ray Hazelton

HAPP CONTROLS EUROPE Ltd

Managing Director
(Africa, Europe, India, Middle East, Russia)
Ray Hazelton
Tel: 44-1843-871-100
Fax: 44-1843-871-122
Mobile: 44-7788-447-282
e-mail: ray.hazelton@happcontrols.com

Call 888-BUY-HAPP To Order

© HAPP CONTROLS

SEE COLOR INSERT
PAGE C15 & C16

Welcome to the Exciting New World of happcontrols.com

Happ Controls is proud to introduce ehapp, the new Happ Controls on-line shopping experience....

The ehapp shopping cart system allows you to easily build a secure on-line order with current pricing and availability, 24 hours a day / 7 days a week. Other on-line benefits of ehapp include viewing the status or history of orders, easy duplication of previous orders, and e-mail notification with tracking information upon shipment of ehapp orders.

Your ehapp Account

- Open 24 hours a day / 7 days a week
- Secure on-line ordering
- Convenient and easy to use
- Customer Statement - Provides you with an up-to-date statement of your account
- Reprint Invoices - Allows you to view and reprint invoices within the past 15, 30, 60, 90, 120, 150, and 180 days
- Pay Invoices by Credit Card - Allows you to take existing unpaid invoices and pay full or partial payment by credit card
- Update customer account information
- Real-Time pricing

Build An Order

- Easy navigation
- Up to the minute pricing
- View stock availability
- e-mail notification upon shipment of order
- Tracking information e-mailed to you

Check Status Of Orders

- Look-up Happ order number
- Find out if the order has been shipped

Display Order History

- View complete orders
- Search by purchase order number or order date
- Obtain shipping information with tracking number
- Easily duplicate orders

View Item History

- View items previously purchased by item number or date
- Easily build a new order by clicking on previously purchased items and adding them to the shopping cart

happcontrols.com

The web site also includes access to new products and monthly specials

Begin your on-line ehapp experience today!

SEE COLOR INSERT
PAGE C15 & C16

STAY CONNECTED WITH happcontrols.com

At **HAPP CONTROLS** we believe in the importance of providing information to our customers. Therefore, we have developed a web site to keep you informed of new things at Happ Controls.

Corporate Web Site

Within this section you will find general updated information on Happ Controls, product support, upcoming trade shows, press releases, access to our on-line catalogs, new products, on-line ordering, and monthly specials.

On-Line Catalogs

Allows you to view our Amusement, Gaming, Vending and Industrial products with just a click of the mouse. You will find our on-line catalogs easy to navigate, with illustrations, current prices, availability, and technical information.

New Products

New and innovative products are developed and introduced on a continual basis. Some are so new they do not appear within the printed catalog. We suggest you check out the New Products section frequently to be aware of the latest product offerings from Happ Controls.

On-Line Ordering

The ehapp shopping cart system allows you to easily build a secure on-line order with current pricing and availability, 24 hours a day / 7 days a week. Other on-line benefits of ehapp include viewing the status or history of orders, easy duplication of previous orders, and e-mail notification with tracking information upon shipment of ehapp orders. Along with numerous other features. See other side for full details.

Monthly Specials

In order to keep our customers informed of the latest specials, we place copies of our sale flyers on our web site. To view, simply click and enjoy the savings.

Call 888-BUY-HAPP To Order
happcontrols.com

©2003 **HAPP CONTROLS** and its licensors. All rights reserved..

HAPP CONTROLS

HOME ENTERTAINMENT PRODUCTS

42" Plasma Display A27
Adhesives A17-A18
Ballstar Pool Ball Cleaner A3
Beverage Racks A19
Billiard Accessories A19-A20
Billiard Ball Racks A3
Billiard Ball Tray A3
Billiard Balls A2-A3
Billiard Cloth A7-A9
Billiard Lamps A6
Billiard Supplies A2-A20
Billiard Table Maintenance A17
Black Light Pool Table Set A6
Bridge Heads A15
Brushes A16
Championship Billiard Cloth Color Chart A8
Covers, Table A19
Cue Chalk And Accessories A4-A5
Cue Racks A10
Cue Stick Case A15
Cue Stick Maintenance A17
Cue Sticks A11-A15
Cue Tips A16
Cup Holder A19
Dartboards And Supplies A23-A26
Foosball Parts A21-A22
Mali Billiard Cloth Color Chart A7
MTX Speakers A28
Pea Shaker And Peas A19
Pool Ball Cleaner A3, A19
Spots A16
Stools A20
Table Hockey Parts A22
Video Games, Arcade Style A29-A32

happcontrols.com

1-888-BUY-HAPP

BALL SETS

Economy Ball Set
26-1017-00

Marbleized Ball Set
26-1017-15

Belgian Crown Standard Ball Set
26-1028-00B

Belgian Super Pro Ball Set
26-1445-00

Belgian Crown Deluxe Ball Set
26-1104-00

Belgian Stone Ball Set
26-1803-00

Belgian Premier Ball Set
26-1106-00

Belgian Bumper Pool Ball Set
26-1069-00

CUE BALLS & RACKS

Economy
8-Ball
26-1016-00

Economy
Cue Ball
2-3/8”
26-1304-01

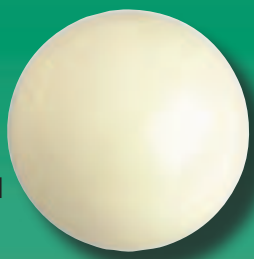

Plastic Ball Tray
26-1071-00

Ballstar Pool
Ball Cleaner
26-1561-00

15 Ball
Plastic Rack
26-1011-00

15 Ball Wood
Rack
26-1076-00

15 Ball Wood
Rack w/
gliders
26-1400-00

9 Ball Plastic
Rack
26-1004-00

CHALK

SILVER CUP CUE CHALK

- Box quantity 12

Part Number	Color
26-1051-12B	Blue
26-1051-12G	Green
26-1051-12DG	Dark Green
26-1051-12BK	Black
26-1051-12BUR	Burgundy
26-1051-12PW	Pewter
26-1051-12PR	Purple
26-1051-12R	Red
26-1051-12TN	Tan

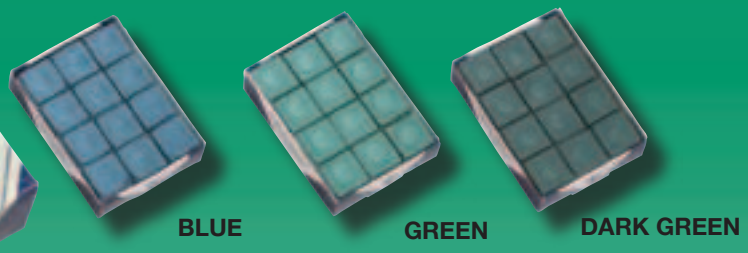

BLUE GREEN DARK GREEN

BLACK BURGUNDY PEWTER

PURPLE RED TAN

- Box quantity 144

Part Number	Color
26-1051-144B	Blue
26-1051-144G	Green
26-1051-144BUR	Burgundy
26-1051-144R	Red
26-1051-144TN	Tan
26-1051-144BK	Black

MASTER CUE CHALK

26-1023-144B

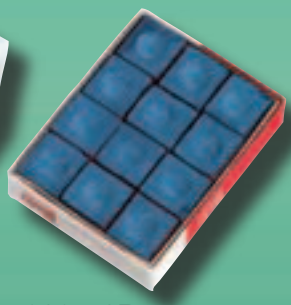

26-1023-12B

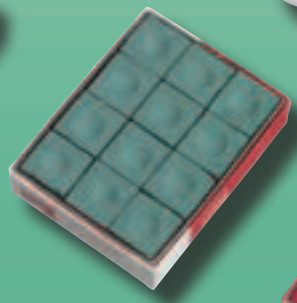

26-1023-12G

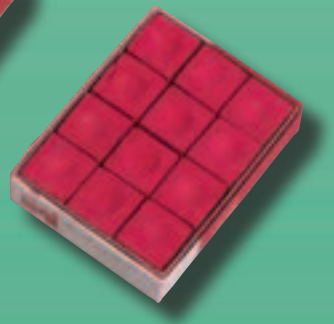

26-1023-12R

Talc Dispenser 26-1133-00

Silver Cup Talc 26-1139-00

CHALK & ACCESSORIES

26-1010-144B

26-1010-12B

26-1010-12G

Silver Cup
Cone Chalk
26-1000-00

Wood Cone Chalk Holder
26-1401-00
(Cone Chalk Not Included)

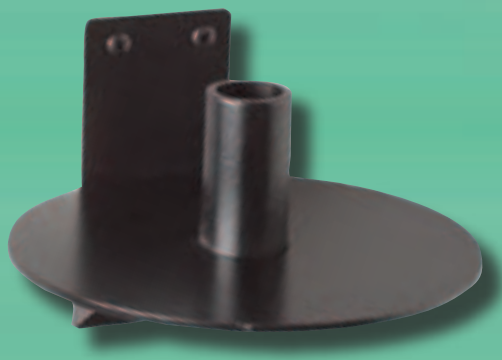

Metal Cone
Chalk Holder
26-1048-00

Cue Chalk
Holder
26-1063-00

Sure Shot
Hand Conditioner
26-1351-00

Pool Chalk
Saver
26-1319-00

BILLIARD LAMPS & ACCESSORIES

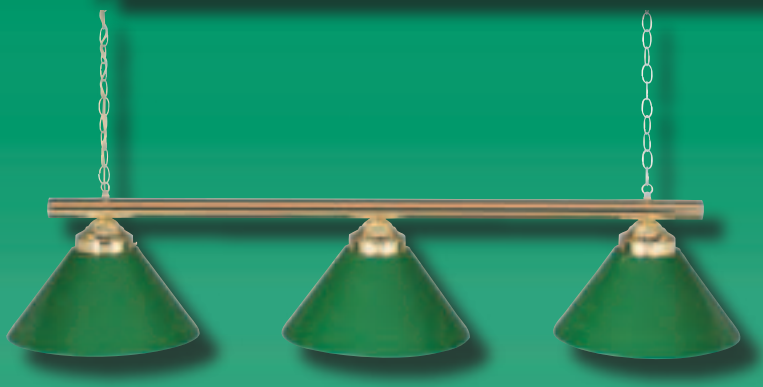

48” Deluxe 3 Lamp
with Green Shades
26-1001-00

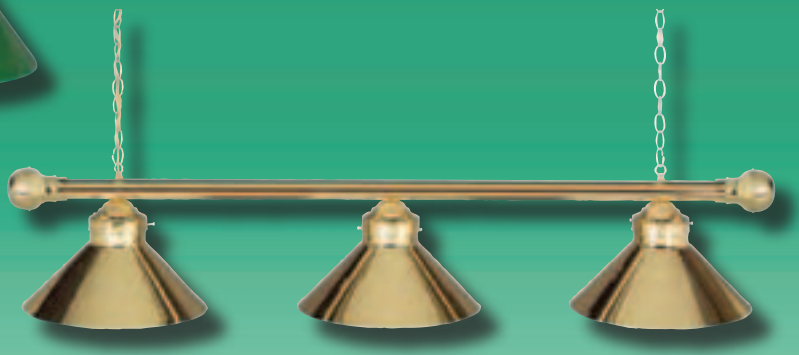

48” Deluxe 3 Lamp
with Brass Shades
26-1001-00BR

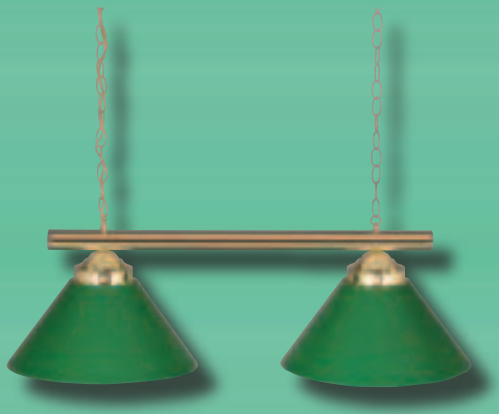

28” Deluxe 2 Lamp
with Green Shades
26-1002-00

14” Deluxe 1 Lamp
with Green Shade
26-1003-00

36” Twin Billiard
Shade
26-1419-10

Black Light Pool
Table Set
26-1508-00

Mali
Billiard Cloth Colors

STANDARD GREEN 33854 | DARK GREEN 10552 | CANADIAN GREEN 11844 | TEAL 24461

ELECTRIC BLUE 9377 | BLUE 9251 | CADET BLUE 9120 | MARINE BLUE 9391

SURF 9390 | EVERGREEN 9388 | SPRUCE 9730 | DENVER BLUE 9728

KHAKI 23517 | TAUPE 9726 | BRONZE 38417 | OLIVE 56325

CAMEL 39225 | MUSTARD 37521 | GOLD 6727 | BROWN 9286

CORAL 9386 | PAPRIKA 42713 | COPPER 30614 | MAHOGANY 9422

ROSE 9387 | RED 9226 | BURGUNDY 9225 | WINE 9397

LAVENDER 9394 | GRAPE 9727 | PLUM 20391 | PURPLE 20279

PEWTER 9392 | BANKERS GRAY 9729 | CHARCOAL 9108 | BLACK 48005

3030 TOUR EDITION
(31) Tournament Green
(32) Dark Green
(39) Bottle Green
(62) Burgundy
(66) Wine
(45) Golden
(57) Euro Blue
(58) Navy
(77) Black
3045 MERCURY ULTRA
(31) Tournament Green
(32) Dark Green
(00) Basic Green
(43) Electric Blue
(62) Burgundy
4045 VALLEY ULTRA
(31) Tournament Green
CHAMPIONSHIP
(81) Aztec
(36) Olive
(37) Taupe
(45) Golden
(46) Khaki
(47) Camel
(59) Brown
(53) Gold
(55) Purple
(72) Steel Grey
(75) Charcoal
(77) Black
(84) Orange
(35) Red
(62) Burgundy
(66) Wine
(54) EggPlant
(56) Mauve
(93) Brick
(58) Navy
(44) Basic Blue
(43) Electric Blue
(57) Euro Blue
(51) Academy Blue
(85) Columbia Blue
(00) Basic Green
(31) Tournament Green
(32) Dark Green
(38) English Green
(39) Bottle Green
(68) Moss Green

PRE-CUT CLOTH

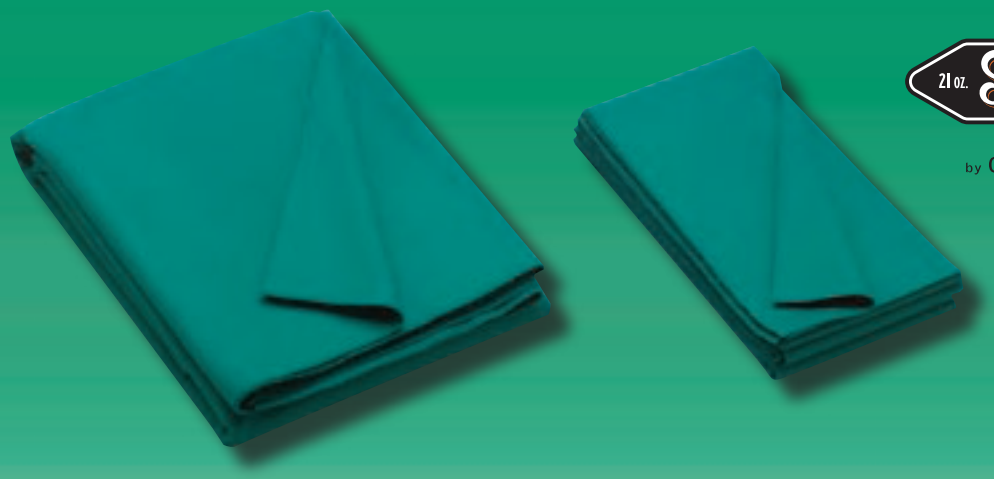

21 oz. Titan Woolen by Championship

CHAMPIONSHIP TITAN PRE-CUT POOL CLOTH BEDS

- 21 oz. cloth without backing, 75% wool & 25% nylon
- Professionally cut to exact size specification for 7 ft., 8 ft., and 9 ft. pool tables
- Lower your inventory costs
- Eliminates any left over cloth at the end of a bolt
- Includes cloth for bed and 6 rails; rails cut horizontally

Size Color:	7' Table Part Number	8' Table Part Number	9' Table Part Number
Standard Green	26-1235-007	26-1235-008	26-1235-009
Dark Green	26-1235-107	26-1235-108	26-1235-109
Electric Blue	26-1235-207	26-1235-208	26-1235-209
Red	26-1235-307	26-1235-308	26-1235-309
Burgundy	26-1235-407	26-1235-408	26-1235-409
Basic Blue	26-1235-507	26-1235-508	26-1235-509
Bottle Green	26-1235-607	26-1235-608	26-1235-609
Camel	26-1235-807	26-1235-808	26-1235-809
Academy Blue	26-1235-907	26-1235-908	26-1235-909
Eggplant	26-1235-127	26-1235-128	26-1235-129
Mauve	26-1235-137	26-1235-138	26-1235-139
Navy Blue	26-1235-147	26-1235-148	26-1235-149
Wine	26-1235-157	26-1235-158	26-1235-159
Moss Green	26-1235-167	26-1235-168	26-1235-169
Steel Grey	26-1235-177	26-1235-178	26-1235-179
Charcoal Blue	26-1235-187	26-1235-188	26-1235-189
Black	26-1235-197	26-1235-198	26-1235-199
Aztec	26-1235-217	26-1235-218	26-1235-219
Coral	—	26-1235-228	—
Brick	26-1235-237	26-1235-238	26-1235-239

CUE RACKS

8 Cue Wall Rack
26-1047-00

6 Cue Wall Rack
26-1054-00

12 Cue Wall Rack
26-1115-00

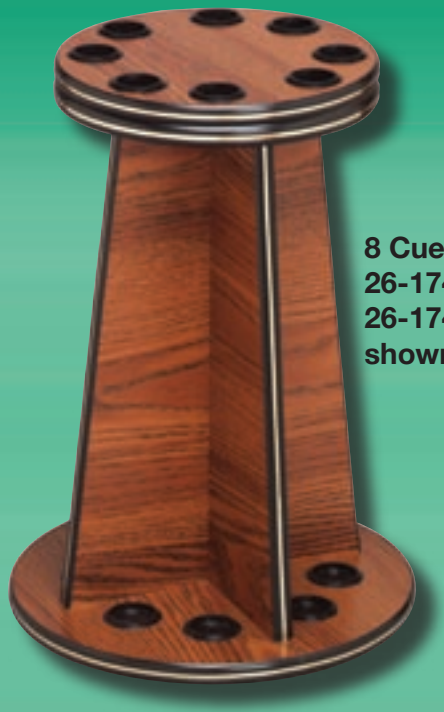

8 Cue Floor Rack
26-1747-00 - Wood Grain
26-1747-10 - Black (not shown)

Heavy Duty
12-Cue
Metal Rack
26-1461-00

Heavy Duty 25 Cue
Black Floor Rack
26-1108-00

12 Cue Black
Floor Rack
26-1105-00

CUE STICKS

Taurus Cue Stick
26-1007-00

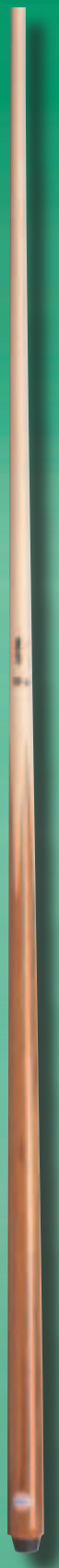

Valley Supreme
26-1014-00

1 Pc. Premium
Fiberglass Cue Stick
26-1984-00

Panther
26-1064-00

Dolphin
26-1316-00

CUE STICKS - 2PC MAPLE

2 PC Maple w/
Green Inlay
26-1807-00

2 PC Maple w/
Blue Inlay
26-1808-00

2 PC Maple w/
White & Natural Inlay
26-1809-00

2 PC Maple w/
White & Pink Inlay
26-1811-00

2 PC Maple w/
Brown Inlay
26-1812-00

2 PC Maple w/
Teal & Spade Inlay
26-1813-00

2 PC. FIBERGLASS CUES

Green w/Fancy Design
26-1851-00

Red w/Black
26-1852-00

Gray w/Black Inlays
26-1853-00

Silver w/Black Inlays
26-1854-00

Black w/Fancy Inlay
26-1855-00

Purple w/Fancy Inlay
26-1856-00

DUFFERIN 2 PC. MAPLE CUES

8-Ball
26-1823-00

Excalibur
26-1826-00

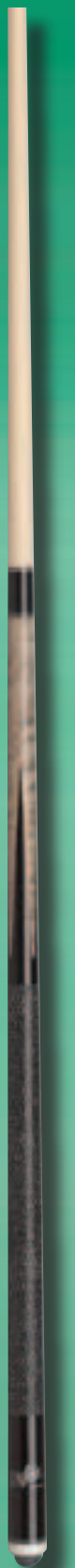

Shadow
26-1827-00

Titan
26-1828-00

Cue Man
26-1829-00

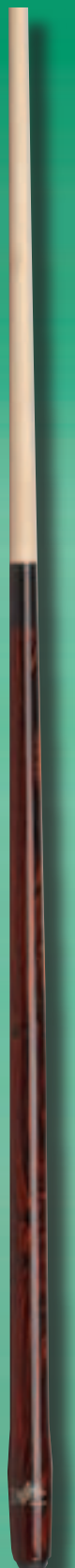

Destiny
26-1830-00

Classic II
26-1832-00

2 PC. MAPLE CUE & CASE

2 PC. Ramin Cue
26-1694-00

Cue Stick
Carrying Case
26-1260-00

BRIDGE HEADS

26-1009-00
Aluminum

26-1320-00
Plastic

26-1026-00
Bronze

26-1496-00
Brass

BRUSHES & SPOTS

26-1680-00

26-1335-00

26-1018-00

26-1090-00

26-1131-00

CUE TIPS

Elk Master Tips
26-1073-13

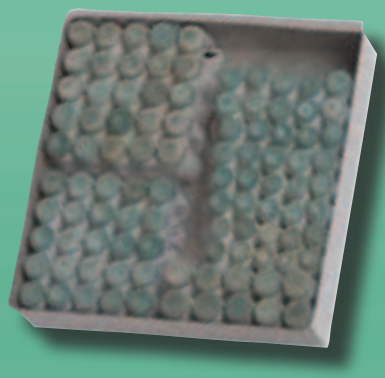

Assorted Tips
26-1583-00

Le Pro Tips
26-1072-13

CUE MAINTENANCE

Cue Top Sander
26-1103-00

Cue Tip Repair Kit
26-1268-00

Tweeten Cement
26-1107-00

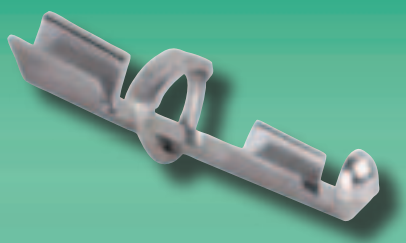

Aluminum Cue Clamp
26-1077-00

Bronze Cue Clamp
26-1340-00

8-Ball Cue Scuffer
26-1130-00

Ferrule - Glue On
26-1241-00

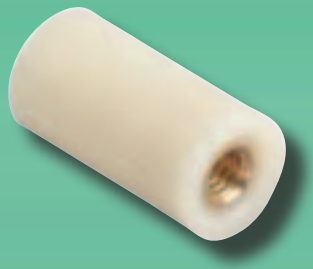

Ferrule - Screw On
26-1241-99

TABLE MAINTENANCE

Pocket Liners
26-1021-00

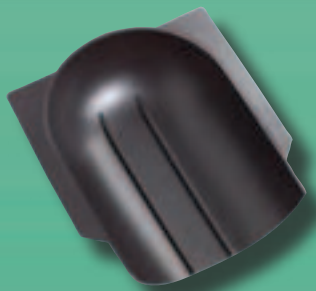

Gulley Boot
26-1008-00

Pool Table Leg
49-0997-00

Web Pockets
26-1381-10

ADHESIVES

Happ Controls
Spray Adhesive
29-1017-00

3M Foam Fast
74 Adhesive
29-1006-00

3M Hi-Tack
76 Adhesive
29-1007-00

3M Super
77 Adhesive
29-1008-00

3M High Strength
90 Adhesive
29-1069-00

3M Scotch-Grip
High Performance
Contact Adhesive
29-1068-00

Barge Cement
29-1024-00

CLEANERS & ACCESSORIES

Wildcat
Felt Cleaner
APC-30
29-1001-00

Wildcat
Pool Ball
Cleaner
PBC-15
26-1263-00

Ballstar
Pool Ball
Cleaner
26-1561-00

Clear Vinyl Pool
Table Cover for
7ft./8ft. Tables
26-1061-00

Green Vinyl Pool
Table Cover
26-1143-00

Heavy Duty PVC
Vinyl Pool
Table Cover
26-1848-00 - Black
26-1849-00 - Brown

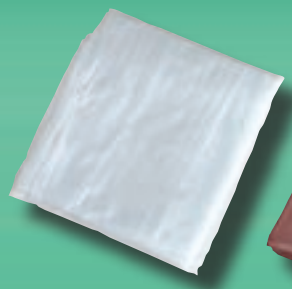

Clear Vinyl Pool
Table Cover for
9ft. Tables
26-1334-00

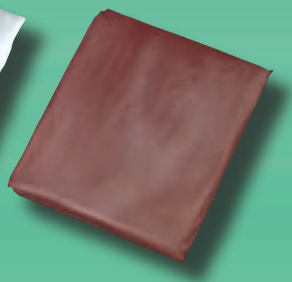

Brown Vinyl Pool
Table Cover for
8ft. Tables
26-1552-00

Multisize Cup Holder
27-1422-00

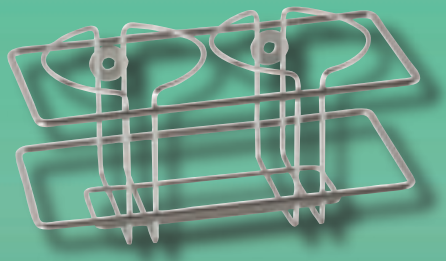

2 Drink Beverage Rack
27-1062-01

3 Drink Beverage Rack
27-1062-11

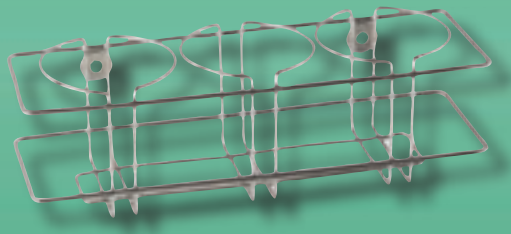

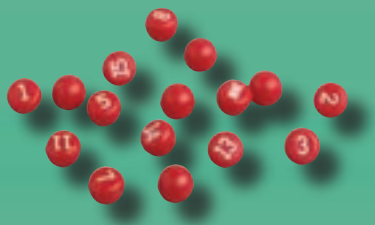

Standard Peas
26-1060-00

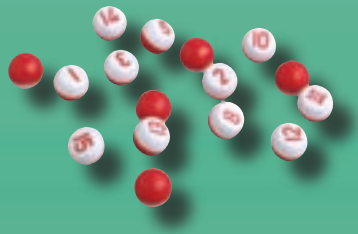

Deluxe Peas
26-1059-00

Pea Shaker
26-1062-00

ACCESSORIES continued

Quarter Coin Holder
26-1065-00

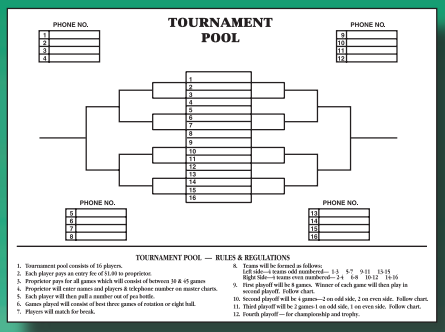

Tournament
Pool Cards
26-1418-00

Red Bar Stool
26-1515-10
Red Bar Stool w/Backrest
26-1805-00 (Not Shown)

Flip Over
Ashtray
51-0302-00

Black Bar Stool
26-1515-16
Black Bar Stool w/Backrest
26-1805-10 (Not Shown)

Premier Pool Table Accessory Kit

26-1779-00

FOOSBALL PARTS

DYNAMO

860155005 860155010 26-1251-00 26-1252-00

TORNADO

205-1522-0 205-1523-0

TOURNAMENT SOCCER

26-1479-00 26-1480-00 26-1481-00 26-1482-00 26-1483-00 26-1484-00

PREMIER SOCCER

49-0761-00 49-0762-00 49-0763-00 49-0914-00 49-0917-00 49-0747-00

FOOSBALL PARTS continued

FOOSBALLS

205-1517-0

49-0550-11C

49-0550-11S

49-0550-15C

49-0550-16BWC

49-0550-99

HANDLES

49-0751-00

217-0670-0

26-1253-00

SCORING

26-1514-00

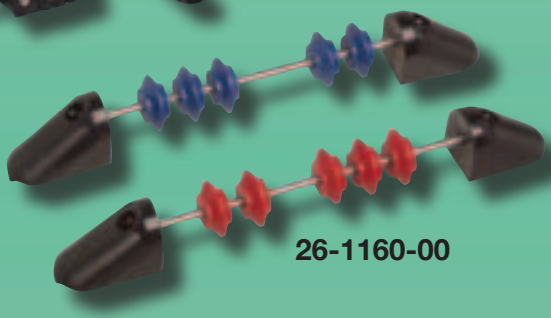
26-1160-00

217-0665-0

217-0664-0

TABLE HOCKEY PARTS

205-1530-0

26-1245-01

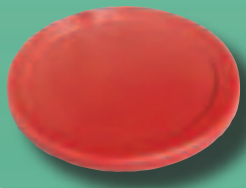
205-1529-0

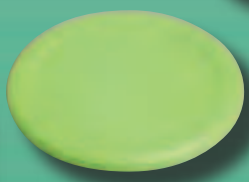
205-1502-0

51-0100-B

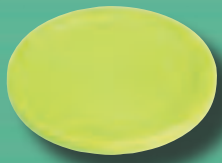
26-1244-00

51-0301-01

DARTBOARDS

Pro Challenger II™

PRO CHALLENGER II™ ELECTRONIC DART BOARD

Pro Challenger II™ is the "Player's Choice". With the expandable game cartridge port, this dart game never becomes obsolete. No other electronic dart board offers more entertainment or greater challenge.

- The only expandable game
- Expandable game cartridge port allows you to change games with optional game cartridges
- Commercial quality
- Professional size target (15-1/2" diameter)
- 1 to 3 players can try their skill against Sal Solitaire (the Computer) at three different skill levels
- 18 games included with 460 game variations
- Full 4-player LED readout
- Double or single bullseye
- Sound effects & volume control
- Patented aesthetic design & durable structure
- AC adapter included
- Two year limited warranty
- Made in the USA

Games Included:

Cricket, Cut-Throat Cricket, No-Score Cricket, 301,501, 701 & 1001 Games, Around the Clock Games (Single, Double & Triple), Hi-Score, Killer, Unders, Overs, Shanghai 1, Shanghai 2, Halve It & Big 6

Accessories Included: 6 Pro darts, tips, power pack, mounting hardware, instruction manual

26-1738-00

DART PRO DARTBOARDS

DART PRO 2-PANEL DARTBOARD

- Commercial quality, patented design and an inexpensive price
- Erasable score pads
- Double bullseye, thin spider and catch ring
- Individual replaceable segments
- Cushioned movable segments
- 4-color dart head
- Safer plastic tipped darts
- Made in the USA
- Complete with 6 Pro darts, erasable marker and mounting hardware

26-2000-00

DART PRO SIMPLEX DARTBOARD

- Soft tip dartboard is ideal for practice
- Double bullseye, thin spider and 4-color dart head
- Cushioned movable and replaceable segments
- Uses safer plastic tipped darts
- Made in the USA

26-2010-00

DARTS

SERIES 5000

38-0492-00

38-0490-00

38-0491-00

38-0489-00

SERIES 6000

38-0486-00

38-0485-00

38-0488-00

38-0487-00

SERIES 7000

38-0495-00

38-0493-00

38-0496-00

38-0494-00

STEEL

38-0482-00

38-0484-00

38-0483-00

38-0481-00

DARTS & ACCESSORIES

26-1074-10 26-1074-16 26-1074-15 26-1074-12

Brass Dart Assortment
26-1074-00

Ultra Flex Plastic Tips
26-1066-500

Dart Tip Extractor
26-1067-00

26-1420-10 26-1420-16 26-1420-15 26-1420-12

26-1070-00

26-1091-00

42" PLASMA DISPLAY MONITOR

- High brightness, High contrast
- PIP with 4 corner position
- Video input system: NTSC-M, NTSC 4.43, PAL, SECAM
- 42" viewable, diagonal
- Digital ready
- Resolution: 852(H) X 480(V)
- Pixel pitch: 1.08mm
- Viewing angle: over 160 degrees
- Audio control: Bass, Treble, balance, equalizer
- Audio Mode: 5 mode sound
- Power: AC100V-240 V (50/60Hz)
- 40" W x 25" H x 3" D
- Weight: 63.94 lbs
- Note: Specifications subject to change
- Artwork for display purposes only

49-6219-00

MTX SPEAKERS

MODEL AAL 212
(Call for Part Number)

49-0776-00

49-0771-00

96-0196-00

49-0804-00

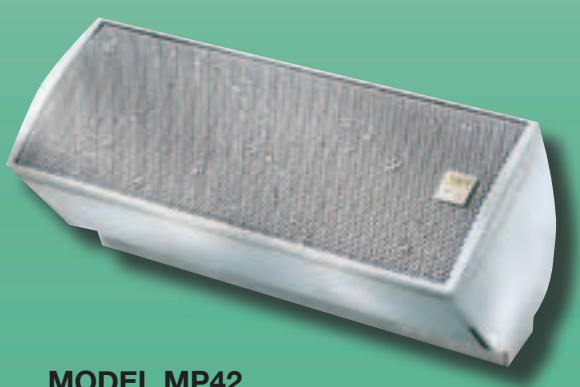

MODEL MP42
49-0780-00 - White (Shown)
49-0780-16 - Black (Not Shown)

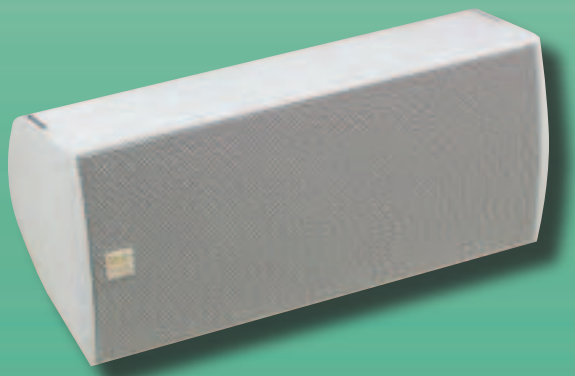

MODEL MP52
White (Shown - Call for Part Number)
49-2034-00 - Black (Not Shown)

GOLDEN TEE FORE 2004

95-2354-00

A30

Let's Go BOWLING

CENTIPEDE
MILLIPEDE
MISSILE COMMAND

RETROCADE
CLASSIC EDITION

95-2353-00

Manufactured by TEAM PLAY, Inc.

™ & © 2002 Cosmodog, LTD. Let's Go Bowling. All Rights Reserved.
™ & © 1980, 1981, 1982 Infogrames Interactive, Inc. Centipede, Millipede, Missile Command. All Rights Reserved.
Used Under License From Midway Games West, Inc.

MADE IN USA

A31

JOUST®

ROBOTRON: 2084®

95-2351-00

Manufactured by TEAM PLAY, Inc.™

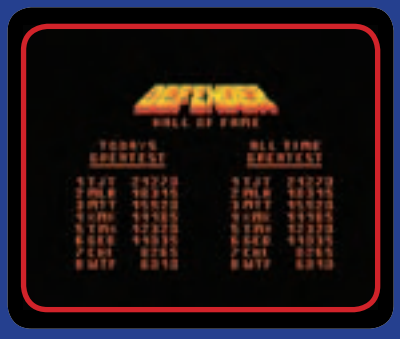

95-2352-00

Manufactured by TEAM PLAY, Inc.™

DEFENDER®

DEFENDER® II

Robotron: 2084 ® and © 1982; Joust ® and © 1982 Midway Amusement Games, LLC. All rights reserved. Used under License.
Defender ® and © 1980; Defender II © 1981 Midway Amusement Games, LLC. All rights reserved. Used under License.

19" Cabaret: 60"x25"x34" 250lbs

SUPER CHEXX HOCKEY

- All Time Classic
- Indestructible dome that covers the playfield
- Gameplay is fast, exciting and realistic
- Players on both sides control all 5 hockey players and the goalie
- New electronics record Goals, Shots on Goal, Period, and Running Time
- Running time is adjustable
- Automatic puck return system
- Overhead dome lighting
- Sudden death overtime
- Equipped with $0.25 coin acceptors

48-0027-00

BET YOU A WET DOLLAR IT WILL WORK IN YOUR GAME.

MEI series 2000 bill acceptors. Wet bill acceptance and a proven track record of reliability, means you win every time.

Our competition just can't beat our proven track record. MEI surpassed the industry's five-year economic life for bill acceptors with the Series 2000. Over 1,000,000 have been in the field for over six years, and still continue to perform to their original design specifications with less than a two percent annualized failure rate.

From wet bill acceptance and fewer jams to higher security than the competition's bill acceptors, only MEI has the experience and the proven technology to give you what your site demands. Even small details such as user friendly arrows and indicator lights make it easier for customers to play your games. And with the reliability of the MEI series 2000, your machines are up and running—which means lower downtime and more revenue for you.

Stay ahead of the game with MEI.
Call Happ Controls at 888-BUY-HAPP (289-4277) to place an order or visit us at happcontrols.com.

mei™

www.meiglobal.com

©2003 Mars, Inc. All rights reserved.

HAPP CONTROLS

106 Garlisch Drive
Elk Grove, IL 60007
888-BUY-HAPP (289-4277)

Accessories	364
Bill Validators	222
Billiards	402
Cleaning & Maintenance	98
Coin Doors	250
Coin & Currency	203
Credit Application	425
Darts & Foosball	396
Driving Controls	284
Game Parts	336
Electrical Supplies	19
Joysticks	305
Jukebox & Music	372
Lighting	10
Material Handling	148
Monitors & Components	163
Optical Guns	325
Order Form	423
Pinball Parts	383
Power Supplies	182
Pushbuttons	189
Redemption	360
Security	114
Tools	54
Trackballs	317
Video Surveillance	136

Corporate Web Site

On-Line Catalogs

New Products

Monthly Specials

On-Line Ordering